PRODUCT CATALOG

HIROSE ELECTRIC CO.,LTD.

DF40 Series

0.4mm Pitch, 1.5 to 4.0mm Height, Board-to-Board/FPC-to-Board Connector

P= 0.4 mm

P= 0.4mm

Wide Variation

4

USB4

Jul.1.2026 Copyright 2026 HIROSE ELECTRIC CO., LTD. All Rights Reserved.

Product Page
https://www.hirose.com/en/product/series/DF40

Jan. 2025

Features

1. High Density Mounting

This is a space-saving design that minimizes connector depth while ensuring an vacuum pick & place area that does not affect mountability.
The smallest depth in it's class : 3.38mm

Space-Saving

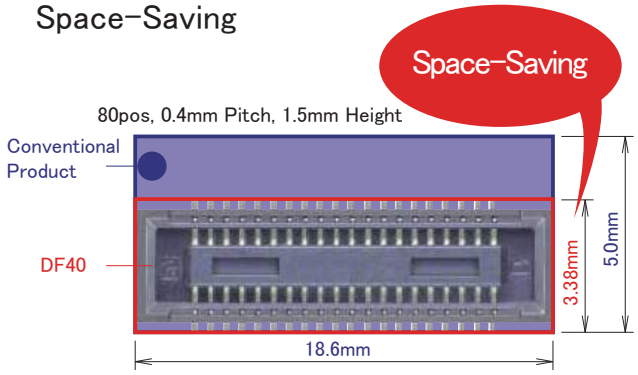

2. Wide Stacking Height Variations

A wide variety of height variations, 1.5, 2.0, 2.5, 3.0, 3.5, 4.0mm with the space-saving design.

3. High Contact Reliability

0.45mm of world's largest effective mating length for 1.5mm mated height.
It has a good click feeling which is effective for preventing incomplete mating, and lock design is installed for small No. of pos. with weak mating force to prevent disconnection.

High Contact Reliability – Effective Mating Length 0.45mm

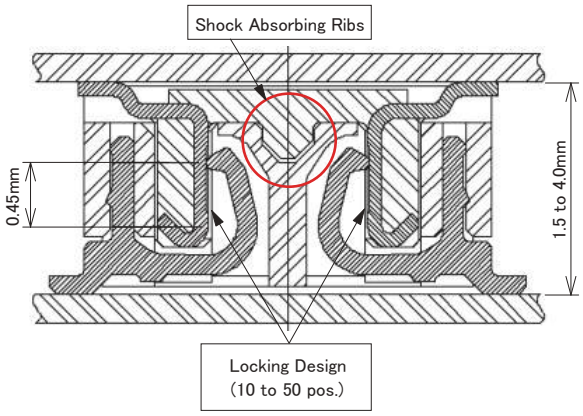

4. Robust Design with Shock Absorbing Ribs

Ribs provided on both connectors fit in when mated to absorb stress at impact.

Jul.1.2026 Copyright 2026 HIROSE ELECTRIC CO., LTD. All Rights Reserved.

5. Wide Self Alignment Range

Guide ribs utilizing dead space ensure 0.33mm in single X and Y directions.

Mating Self Alignment Range : ±0.33mm in Single XY directions

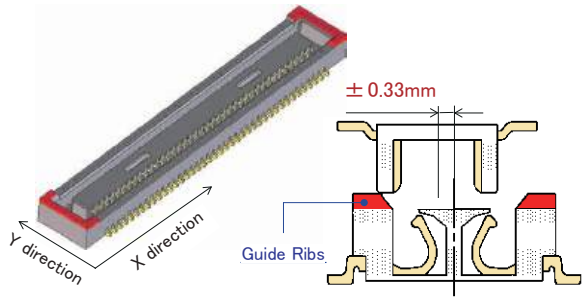

6. Supports USB4 Gen.2 (20Gbps) transmission

Only H=1.5mm type is compatible with Type-C signal transmission.

7. Solder Wicking Prevention

The receptacle has a nickel barrier and the plug has the insert molded design to prevent soldering.

8. Splash-Resistant Design Protects Contacts

Both connectors contact parts are walled to prevent splashes such as flux from adhering to the contacts.

9. Compliant with RoHS

In consideration of environmental issues, we do not use substances prohibited by RoHS Directive.

10. High-Speed Signal Support, Noise Prevention

We also have a shielded type that can support high-speed signal and prevent noise.

Jul.1.2026 Copyright 2026 HIROSE ELECTRIC CO., LTD. All Rights Reserved.

Stacking Height Variation

Standard Type

Stacking Height / No. of Pos.	1.5mm	2.0mm	2.5mm	3.0mm	3.5mm	4.0mm
10	○	-	○	-	-	-
12	○	○	-	-	-	-
20	○	○	○	-	○	-
24	○	○	-	-	-	-
30	○	○	○	○	○	-
34	○	-	-	-	-	-
40	○	○	○	○	○	-
44	-	-	-	○	-	-
50	○	○	○	○	○	○
60	○	○	○	○	○	○
70	○	○	-	○	-	-
80	○	○	-	○	○	○
90	○	-	-	○	-	○
100	○	-	-	○	-	-
120	○	-	-	-	-	-

Shielded Type

Stacking Height / No. of Pos.	1.5mm	3.0mm	3.5mm
10	○	-	-
30	○	-	-
36	-	-	○
48	○	○	-
70	-	○	-

Jul.1.2026 Copyright 2026 HIROSE ELECTRIC CO., LTD. All Rights Reserved.

Product Specifications

Rated Current	0.3A (Note 1)	Operating Temperature (Note 2)	-55 to +85℃
Rated Voltage	50V AC/DC	Operating Humidity Range	20 to 80%
		Storage Temperature (Note 3)	-10 to +60℃
		Storage Humidity Range (Note 3)	40 to 70%

Item	Specifications	Conditions
Insulation Resistance	50MΩ Min.	Measured at 100V DC
Withstanding Voltage	No Flashover or Breakdown	150V AC for 1 min.
Contact Resistance	90mΩ Max.	Measured at 20mV AC, 1kHz, 1mA
Vibration Resistance	No electrical discontinuity of 1μs or more.	Frequency 10 to 55Hz, single amplitude of 0.75mm, 2 hours each of 3-axis direction
Moisture Resistance	Contact Resistance : 90mΩ Max. Insulation Resistance : 25MΩ Min.	Temperature : 40±2℃, Humidity : 90 to 95%, Left for 96 hours
Temperature Cycles	Contact Resistance : 90mΩ Max. Insulation Resistance : 50MΩ Min.	(-55℃ : 30 min. → +5 to +35℃ : 10 min. → +85℃ : 30 min. → +5 to +35℃ : 10 min.) 5 cycles
Mating Durability	Contact Resistance : 90mΩ Max.	30 times
Solder Heat Resistance	No dissolution or resin melting that will affect performance.	Reflow : According to the Recommended Temperature Profile Hand Soldering : 350℃ within 3 sec.

Note 1 : The rated current for 120pos. is 0.25A.
Note 2 : Includes temperature rise caused by current flow.
Note 3 : Storage refers to the long-term storage condition for unused products before the board mounting.
Operating temperature and humidity range apply when the product is not powered after PCB mounting and when temporarily stored during transportation.

Materials / Finish

Standard, Non Shielded Type

Product	Component	Material	Color / Finish	Remarks
Receptacle	Housing	LCP	Black	UL94V-0
	Contact	Phosphorous Bronze	Gold Plating	-
Plug	Housing	LCP	Black	UL94V-0
	Contact	Phosphorous Bronze	Gold Plating	-

Shielded Type

Product	Component	Material	Color / Finish	Remarks
Receptacle	Housing	LCP	Black	UL94V-0
	Contact	Phosphorous Bronze	Gold Plating	-
	Shield			-
Plug	Housing	LCP	Black	UL94V-0
	Contact	Phosphorous Bronze	Gold Plating	-
	Retention Tab			-

Jul.1.2026 Copyright 2026 HIROSE ELECTRIC CO., LTD. All Rights Reserved.

Product Number Structure

Refer to the chart below when determining the product specifications from the product number.
Please select from the product numbers listed in this catalog when placing orders.

■ Standard, Non Shielded Type

●Receptacle

DF40 # (##) - # DS - 0.4 V (##)
❶ ❷ ❸ ❹ ❺ ❻ ❼ ❽

❶ Series Name	DF40	❺ Connector Type	DS : Double Row Receptacle
❷ Shape Symbol	B : Retention Tab HB : Retention Tab (Stacking Height 2.5mm Min.) C : No Retention Tab HC : No Retention Tab (Stacking Height 2.5mm Min.)	❻ Contact Pitch	0.4mm
❸ Stacking Height	None : 1.5mm 2.0 : 2.0mm 2.5 : 2.5mm 3.0 : 3.0mm 3.5 : 3.5mm 4.0 : 4.0mm	❼ Contact Type	V : Straight SMT
❹ No. of Pos.	10, 12, 20, 24, 30, 34, 40, 44, 50, 60, 70, 80, 90, 100, 120	❽ Packaging Type	(51) : Embossed Packaging (58) : Embossed Packaging

●Plug

DF40 # - # DP - 0.4 V (##)
❶ ❷ ❸ ❹ ❺ ❻ ❼

❶ Series Name	DF40	❺ Contact Pitch	0.4mm
❷ Shape Symbol	C : No Retention Tab	❻ Contact Type	V : Straight SMT
❸ No. of Pos.	10, 12, 20, 24, 30, 34, 40, 44, 50, 60, 70, 80, 90, 100, 120	❼ Packaging Type	(51) : Embossed Packaging (58) : Embossed Packaging
❹ Connector Type	DP : Double Row Plug		

Jul.1.2026 Copyright 2026 HIROSE ELECTRIC CO., LTD. All Rights Reserved.

■ Shielded Type

●Receptacle

DF40 GB (##) - # DS - 0.4 V (##)

❶ ❷ ❸ ❹ ❺ ❻ ❼ ❽

❶ Series Name	DF40	❺ Connector Type	DS : Double Row Receptacle
❷ Shape Symbol	GB : With Shield	❻ Contact Pitch	0.4mm
❸ Stacking Height	1.5 : 1.5mm 3.0 : 3.0mm	❼ Contact Type	V : Straight SMT
❹ No. of Pos.	10, 30, 36, 48, 70	❽ Packaging Type	(51) : Embossed Packaging (58) : Embossed Packaging

●Plug

DF40 GB - # DP - 0.4 V (##)

❶ ❷ ❸ ❹ ❺ ❻ ❼

❶ Series Name	DF40	❺ Contact Pitch	0.4mm
❷ Shape Symbol	GB : Retention Tab (For Shielded Type)	❻ Contact Type	V : Straight SMT
❸ No. of Pos.	10, 30, 36, 48, 70	❼ Packaging Type	(51) : Embossed Packaging (58) : Embossed Packaging
❹ Connector Type	DP : Double Row Plug		

Jul.1.2026 Copyright 2026 HIROSE ELECTRIC CO., LTD. All Rights Reserved.

Receptacle

Stacking Height 1.5mm

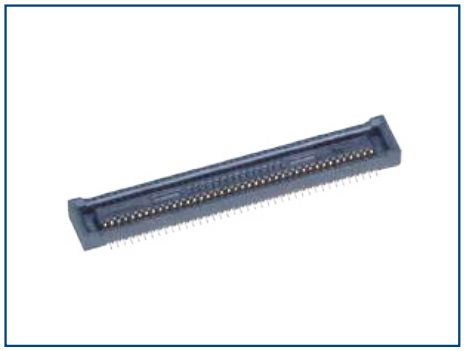

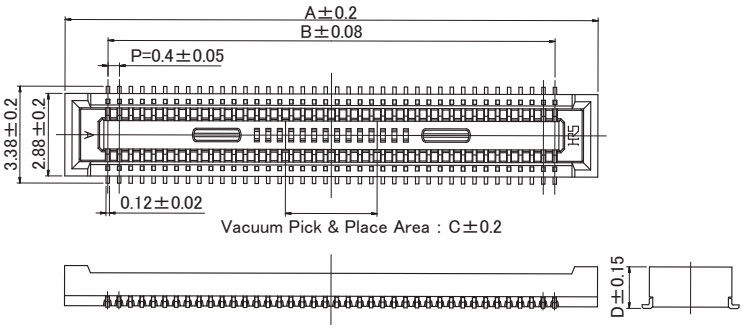

Recommended PCB Pattern

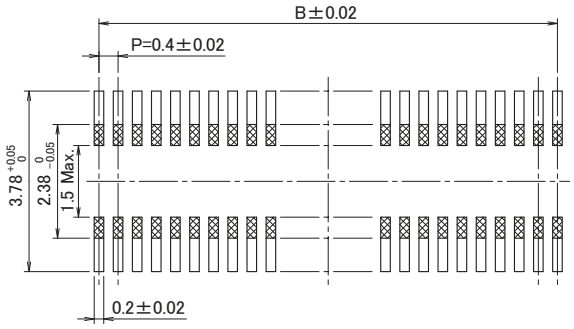

DF40C (No Retention Tab)

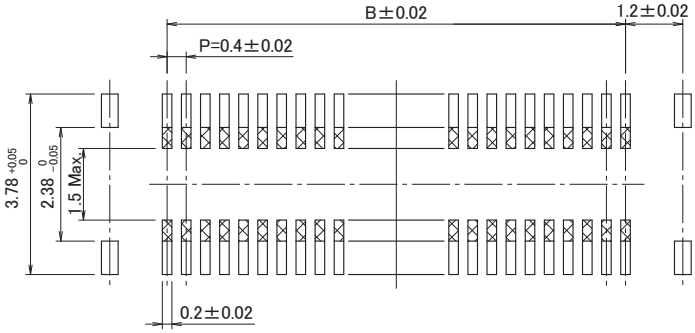

DF40B (Retention Tab)

Unit : mm

Part No.	HRS No.	No. of Pos.	A	B	C	D	Purchase Unit (##):(51)	Purchase Unit (##):(58)
DF40B-10DS-0.4V(##)	CL0684-4038-8-##	10	4.6	1.6	1.0	1.45	○	○
DF40B-12DS-0.4V(##)	CL0684-4152-3-##	12	5.0	2.0			○	○
DF40B-30DS-0.4V(##)	CL0684-4090-8-##	30	8.6	5.6	1.5		○	○
DF40B-50DS-0.4V(##)	CL0684-4018-0-##	50	12.6	9.6	3.2		○	-
DF40B-60DS-0.4V(##)	CL0684-4049-4-##	60	14.6	11.6			○	-
DF40B-80DS-0.4V(##)	CL0684-4052-9-##	80	18.6	15.6			○	-
DF40C-20DS-0.4V(##)	CL0684-4005-9-##	20	6.6	3.6	1.2		○	○
DF40C-24DS-0.4V(##)	CL0684-4006-1-##	24	7.4	4.4	1.5		○	○
DF40C-30DS-0.4V(##)	CL0684-4007-4-##	30	8.6	5.6	2.3		○	○
DF40C-34DS-0.4V(##)	CL0684-4023-0-##	34	9.4	6.4	3.2		○	○
DF40C-40DS-0.4V(##)	CL0684-4008-7-##	40	10.6	7.6			○	○
DF40C-50DS-0.4V(##)	CL0684-4009-0-##	50	12.6	9.6			○	○
DF40C-60DS-0.4V(##)	CL0684-4004-6-##	60	14.6	11.6			○	○
DF40C-70DS-0.4V(##)	CL0684-4016-5-##	70	16.6	13.6			○	○
DF40C-80DS-0.4V(##)	CL0684-4002-0-##	80	18.6	15.6			○	○
DF40C-90DS-0.4V(##)	CL0684-4124-8-##	90	20.6	17.6			○	○
DF40C-100DS-0.4V(##)	CL0684-4033-4-##	100	22.6	19.6			○	○
DF40C-120DS-0.4V(##)	CL0684-4108-1-##	120	26.6	23.6			○	-

【Specification Number】
(51) : Embossed Packaging (5,000pcs per reel)
(58) : Embossed Packaging (1,000pcs per reel)

Note 1 : Please order embossed tape packaged items by the reel.
Note 2 : The 60 pos. or more have recesses on the suction surface that do not affect suction.
Note 3 : ⊠ is insulation area.
Note 4 : This connector has no polarity.

Jul.1.2026 Copyright 2026 HIROSE ELECTRIC CO., LTD. All Rights Reserved.

Stacking Height 2.0mm

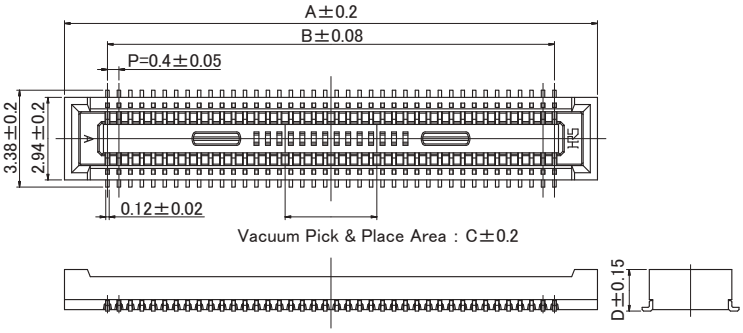

Recommended PCB Pattern

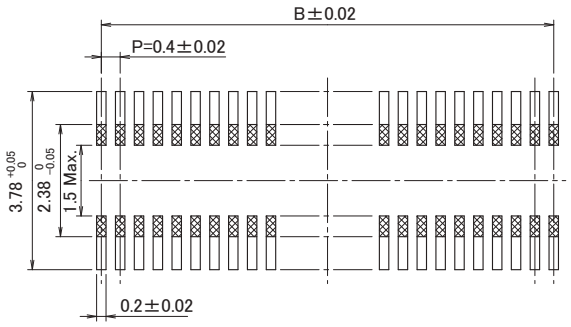

DF40C (No Retention Tab)

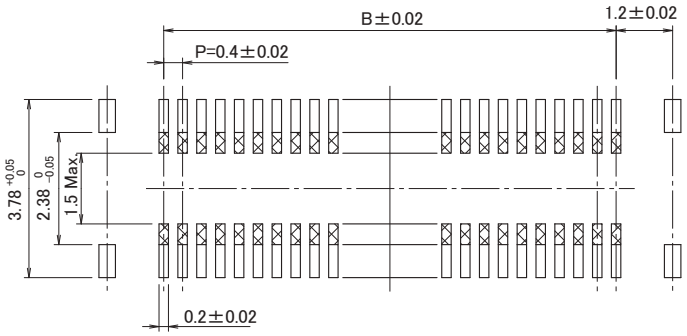

DF40B (Retention Tab)

Unit : mm

Part No.	HRS No.	No. of Pos.	A	B	C	D	Purchase Unit (##):(51)	Purchase Unit (##):(58)
DF40B(2.0)-12DS-0.4V(##)	CL0684-4150-8-##	12	5.0	2.0	1.0	1.95	○	○
DF40B(2.0)-80DS-0.4V(##)	CL0684-4128-9-##	80	18.6	15.6	3.2		○	-
DF40C(2.0)-20DS-0.4V(##)	CL0684-4040-0-##	20	6.6	3.6	1.0		○	○
DF40C(2.0)-24DS-0.4V(##)	CL0684-4041-2-##	24	7.4	4.4	1.2		○	○
DF40C(2.0)-30DS-0.4V(##)	CL0684-4058-5-##	30	8.6	5.6	1.5		○	○
DF40C(2.0)-40DS-0.4V(##)	CL0684-4042-5-##	40	10.6	7.6	3.2		○	○
DF40C(2.0)-50DS-0.4V(##)	CL0684-4091-0-##	50	12.6	9.6			○	○
DF40C(2.0)-60DS-0.4V(##)	CL0684-4034-7-##	60	14.6	11.6			○	○
DF40C(2.0)-70DS-0.4V(##)	CL0684-4147-3-##	70	16.6	13.6			○	○
DF40C(2.0)-80DS-0.4V(##)	CL0684-4132-6-##	80	18.6	15.6			○	○

【Specification Number】
(51) : Embossed Packaging (4,000pcs per reel)
(58) : Embossed Packaging (1,000pcs per reel)

Note 1 : Please order embossed tape packaged items by the reel.
Note 2 : The 60 pos. or more have recesses on the suction surface that do not affect suction.
Note 3 : ⊠ is insulation area.
Note 4 : This connector has no polarity.

Jul.1.2026 Copyright 2026 HIROSE ELECTRIC CO., LTD. All Rights Reserved.

Stacking Height 2.5 to 4.0mm

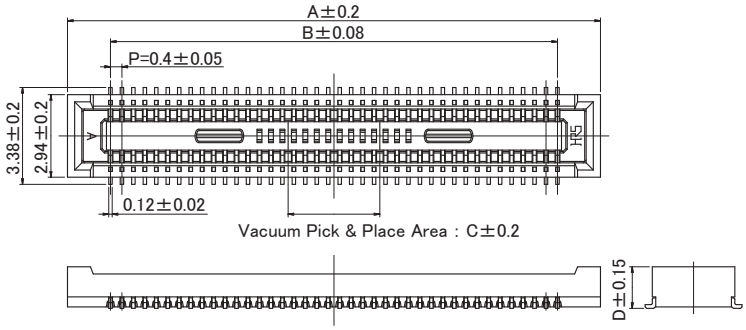

Recommended PCB Pattern

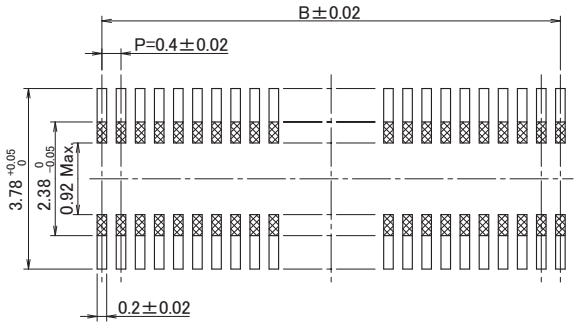

DF40HC (No Retention Tab)

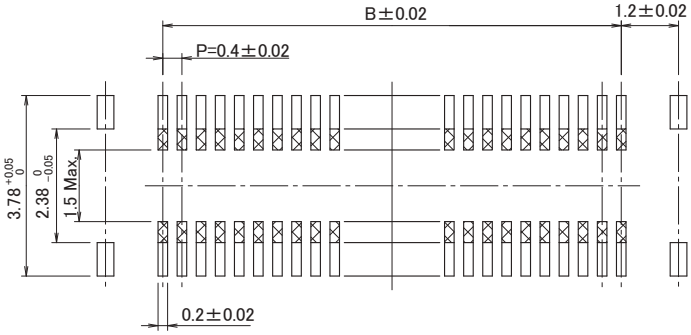

DF40HB (Retention Tab)

Stacking Height 2.5mm

Unit : mm

Part No.	HRS No.	No. of Pos.	A	B	C	D	Purchase Unit (##):(51)	Purchase Unit (##):(58)
DF40HB(2.5)-10DS-0.4V(##)	CL0684-4189-3-##	10	4.6	1.6	1.0	2.4	○	-
DF40HC(2.5)-20DS-0.4V(##)	CL0684-4126-3-##	20	6.6	3.6			○	○
DF40HC(2.5)-30DS-0.4V(##)	CL0684-4127-6-##	30	8.6	5.6	1.5		○	-
DF40HC(2.5)-40DS-0.4V(##)	CL0684-4112-9-##	40	10.6	7.6	3.2		○	○
DF40HC(2.5)-50DS-0.4V(##)	CL0684-4101-2-##	50	12.6	9.6			○	○
DF40HC(2.5)-60DS-0.4V(##)	CL0684-4085-8-##	60	14.6	11.6			○	○

【Specification Nmber】
(51) : Embossed Packaging (3,000pcs per reel)
(58) : Embossed Packaging (1,000pcs per reel)

Stacking Height 3.0mm

Unit : mm

Part No.	HRS No.	No. of Pos.	A	B	C	D	Purchase Unit (##):(51)	Purchase Unit (##):(58)
DF40HC(3.0)-30DS-0.4V(##)	CL0684-4098-0-##	30	8.6	5.6	1.5	2.9	○	○
DF40HC(3.0)-40DS-0.4V(##)	CL0684-4169-6-##	40	10.6	7.6	3.2		○	-
DF40HC(3.0)-44DS-0.4V(##)	CL0684-4076-7-##	44	11.4	8.4			○	○
DF40HC(3.0)-50DS-0.4V(##)	CL0684-4099-2-##	50	12.6	9.6			○	○
DF40HC(3.0)-60DS-0.4V(##)	CL0684-4100-0-##	60	14.6	11.6			○	○
DF40HC(3.0)-70DS-0.4V(##)	CL0684-4138-2-##	70	16.6	13.6			○	○
DF40HC(3.0)-80DS-0.4V(##)	CL0684-4180-9-##	80	18.6	15.6			○	○
DF40HC(3.0)-90DS-0.4V(##)	CL0684-4161-4-##	90	20.6	17.6			○	○
DF40HC(3.0)-100DS-0.4V(##)	CL0684-4151-0-##	100	22.6	19.6			○	○

【Specification Nmber】
(51) : Embossed Packaging (3,000pcs per reel)
(58) : Embossed Packaging (1,000pcs per reel)

Jul.1.2026 Copyright 2026 HIROSE ELECTRIC CO., LTD. All Rights Reserved.

Stacking Height 3.5mm

Unit : mm

Part No.	HRS No.	No. of Pos.	A	B	C	D	Purchase Unit (##):(51)	Purchase Unit (##):(58)
DF40HC(3.5)-20DS-0.4V(##)	CL0684-4188-0-##	20	6.6	3.6	1.0	3.4	○	-
DF40HC(3.5)-30DS-0.4V(##)	CL0684-4136-7-##	30	8.6	5.6	1.5		○	○
DF40HC(3.5)-40DS-0.4V(##)	CL0684-4209-9-##	40	10.6	7.6	3.2		○	-
DF40HC(3.5)-50DS-0.4V(##)	CL0684-4109-4-##	50	12.6	9.6			○	○
DF40HC(3.5)-60DS-0.4V(##)	CL0684-4102-5-##	60	14.6	11.6			○	○
DF40HC(3.5)-80DS-0.4V(##)	CL0684-4162-7-##	80	18.6	15.6			○	○

【Specification Nmber】
(51) : Embossed Packaging (2,000pcs per reel)
(58) : Embossed Packaging (1,000pcs per reel)

Stacking Height 4.0mm

Unit : mm

Part No.	HRS No.	No. of Pos.	A	B	C	D	Purchase Unit (##):(51)	Purchase Unit (##):(58)
DF40HB(4.0)-50DS-0.4V(##)	CL0684-4104-0-##	50	12.6	9.6	3.2	3.9	○	-
DF40HC(4.0)-40DS-0.4V(##)	CL0684-4111-6-##	40	10.6	7.6			○	-
DF40HC(4.0)-50DS-0.4V(##)	CL0684-4215-1-##	50	12.6	9.6			○	-
DF40HC(4.0)-60DS-0.4V(##)	CL0684-4133-9-##	60	14.6	11.6			○	○
DF40HC(4.0)-80DS-0.4V(##)	CL0684-4140-4-##	80	18.6	15.6			○	○
DF40HC(4.0)-90DS-0.4V(##)	CL0684-4165-5-##	90	20.6	17.6			○	○

【Specification Nmber】
(51) : Embossed Packaging (2,000pcs per reel)
(58) : Embossed Packaging (1,000pcs per reel)

Note 1 : Please order embossed tape packaged items by the reel.
Note 2 : The 60 pos. or more have recesses on the suction surface that do not affect suction.
Note 3 : ⊠ is insulation area.
Note 4 : This connector has no polarity.

Jul.1.2026 Copyright 2026 HIROSE ELECTRIC CO., LTD. All Rights Reserved.

Receptacle (With Shield)

Stacking Height 1.5mm (With Shield)

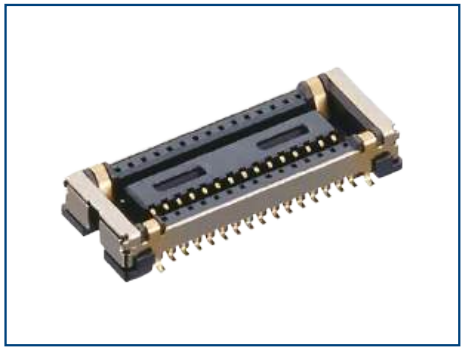

<30 pos.>

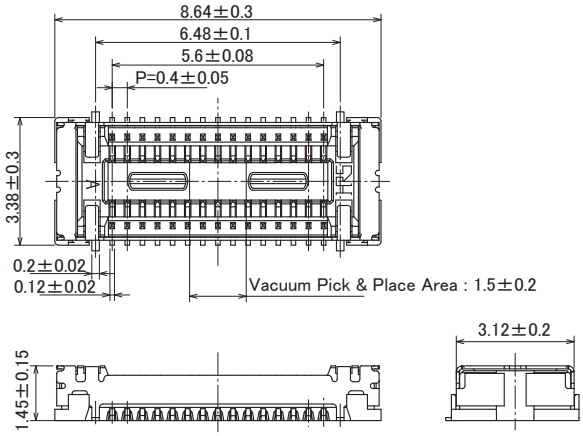

<48 pos.>

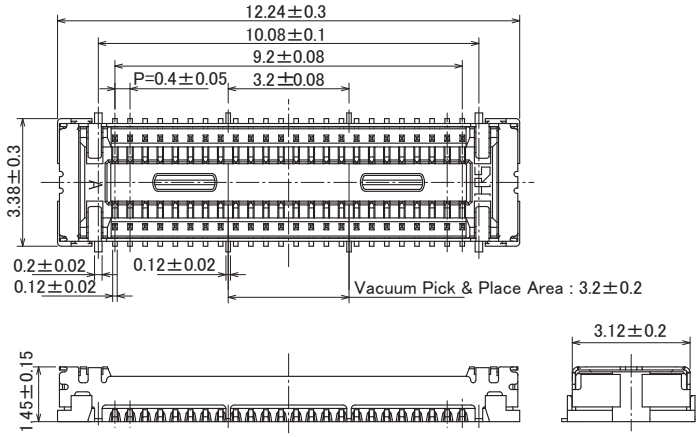

Recommended PCB Pattern

<30 pos.>

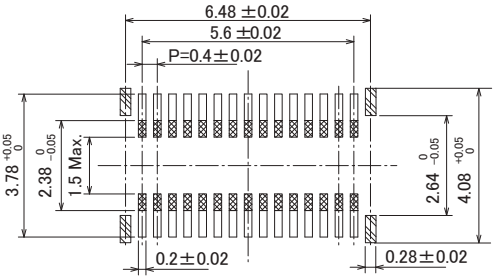

<48 pos.>

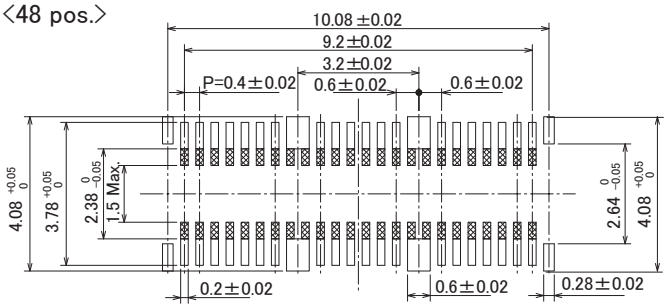

Unit : mm

Part No.	HRS No.	No. of Pos.	Signal PIN	Ground PIN	Purchase Unit (##):(51)	Purchase Unit (##):(58)
DF40GB(1.5)-10DS-0.4V(##)	CL0684-4224-2-##	10	10	4	○	○
DF40GB(1.5)-30DS-0.4V(##)	CL0684-4198-4-##	30	30	4	○	○
DF40GB(1.5)-48DS-0.4V(##)	CL0684-4194-3-##	48	40	12	○	○

【Specification Nmber】
(51) : Embossed Packaging (5,000pcs per reel)
(58) : Embossed Packaging (1,000pcs per reel)

Note 1 : Please order embossed tape packaged items by the reel.
Note 2 : ▨ is insulation area.
Note 3 : This connector has no polarity.

Jul.1.2026 Copyright 2026 HIROSE ELECTRIC CO., LTD. All Rights Reserved.

Stacking Height 3.0 to 3.5mm (With Shield)

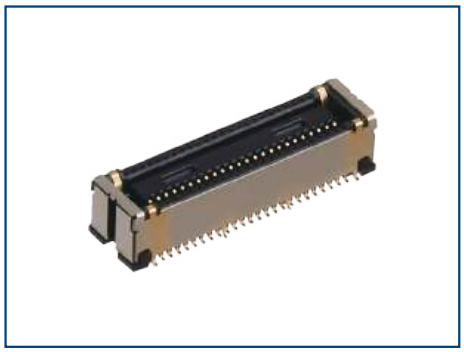

〈48 pos.〉

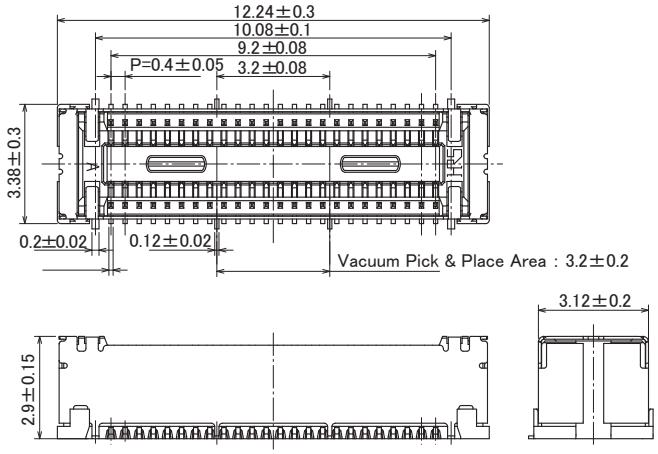

〈70 pos.〉

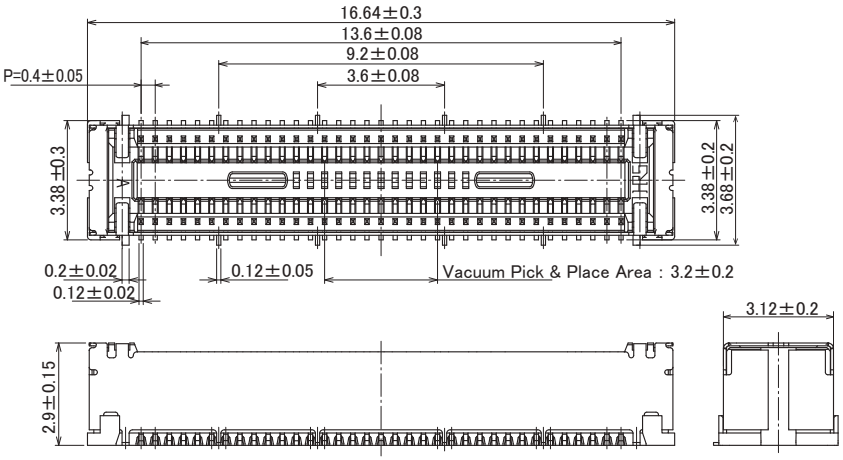

Recommended PCB Pattern

〈48 pos.〉

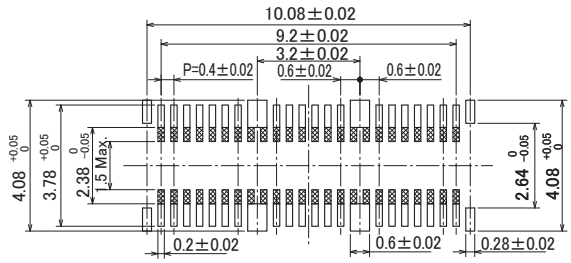

〈70 pos.〉

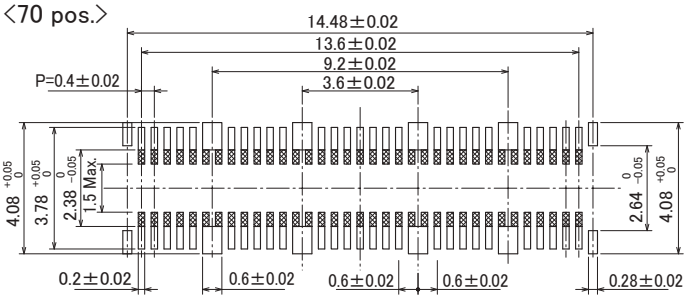

Stacking Height 3.0mm

Unit : mm

Part No.	HRS No.	No. of Pos.	Signal PIN	Ground PIN	Purchase Unit (##):(51)	Purchase Unit (##):(58)
DF40GB(3.0)-48DS-0.4V(##)	CL0684-4197-1-##	48	40	12	○	○
DF40GB(3.0)-70DS-0.4V(##)	CL0684-4196-9-##	70	54	20	○	○

Stacking Height 3.5mm

Unit : mm

Part No.	HRS No.	No. of Pos.	Signal PIN	Ground PIN	Purchase Unit (##):(51)	Purchase Unit (##):(58)
DF40GB(3.5)-36DS-0.4V(##)	CL0684-4231-0-##	36	36	4	○	-

【Specification Nmber】
(51) : Embossed Packaging (3,000pcs per reel)
(58) : Embossed Packaging (1,000pcs per reel)

Note 1 : Please order embossed tape packaged items by the reel.
Note 2 : The 70 pos. or more have recesses on the suction surface that do not affect suction.
Note 3 : ⌧ is insulation area.
Note 4 : This connector has no polarity.

Jul.1.2026 Copyright 2026 HIROSE ELECTRIC CO., LTD. All Rights Reserved.

Plug

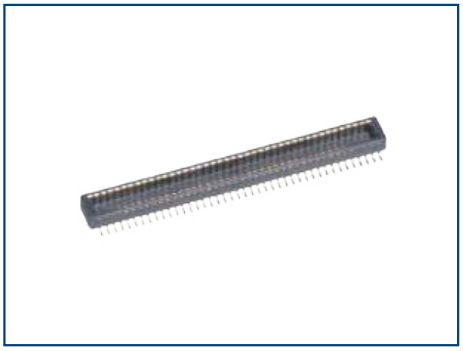

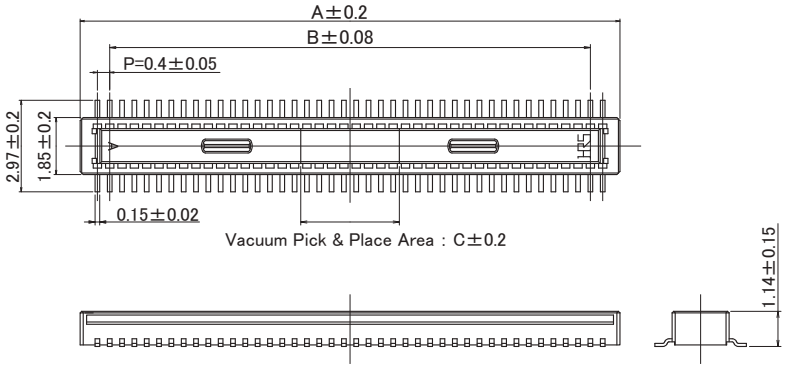

Recommended PCB Pattern

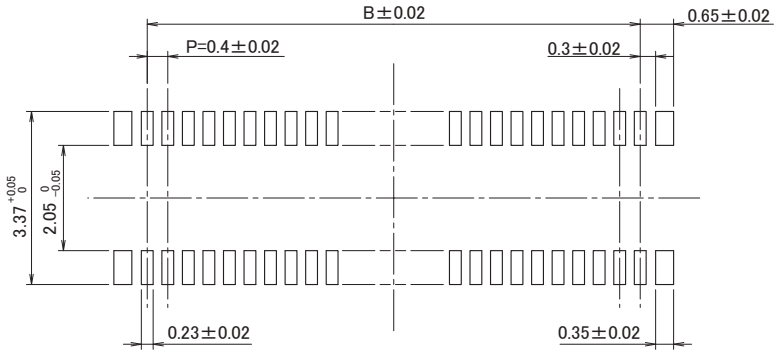

Unit : mm

Part No.	HRS No.	No. of Pos.	A	B	C	Purchase Unit (##):(51)	Purchase Unit (##):(58)
DF40C-10DP-0.4V(##)	CL0684-4035-0-##	10	3.52	1.6	1.0	○	○
DF40C-12DP-0.4V(##)	CL0684-4149-9-##	12	3.92	2.0		○	○
DF40C-20DP-0.4V(##)	CL0684-4010-9-##	20	5.52	3.6		○	○
DF40C-24DP-0.4V(##)	CL0684-4011-1-##	24	6.32	4.4	1.2	○	○
DF40C-30DP-0.4V(##)	CL0684-4012-4-##	30	7.52	5.6	1.5	○	○
DF40C-34DP-0.4V(##)	CL0684-4024-3-##	34	8.32	6.4	2.3	○	○
DF40C-40DP-0.4V(##)	CL0684-4013-7-##	40	9.52	7.6	3.2	○	○
DF40C-44DP-0.4V(##)	CL0684-4077-0-##	44	10.32	8.4		○	○
DF40C-50DP-0.4V(##)	CL0684-4014-0-##	50	11.52	9.6		○	○
DF40C-60DP-0.4V(##)	CL0684-4003-3-##	60	13.52	11.6		○	○
DF40C-70DP-0.4V(##)	CL0684-4015-2-##	70	15.52	13.6		○	○
DF40C-80DP-0.4V(##)	CL0684-4001-8-##	80	17.52	15.6		○	○
DF40C-90DP-0.4V(##)	CL0684-4125-0-##	90	19.52	17.6		○	○
DF40C-100DP-0.4V(##)	CL0684-4032-1-##	100	21.52	19.6		○	○
DF40C-120DP-0.4V(##)	CL0684-4107-9-##	120	25.52	23.6		○	-

【Specification Nmber】
(51) : Embossed Packaging (5,000pcs per reel)
(58) : Embossed Packaging (1,000pcs per reel)

Note 1 : Please order embossed tape packaged items by the reel.
Note 2 : There are no concave areas on plug side contact part to increase the mating strength for 60 pos. or more.
Note 3 : Use the 4 corner contact as a retention tab. It will not be energized.
Note 4 : The 90 pos. or more have recesses on the suction surface that do not affect suction.
Note 5 : This connector has no polarity.

Jul.1.2026 Copyright 2026 HIROSE ELECTRIC CO., LTD. All Rights Reserved.

Plug (With Shield)

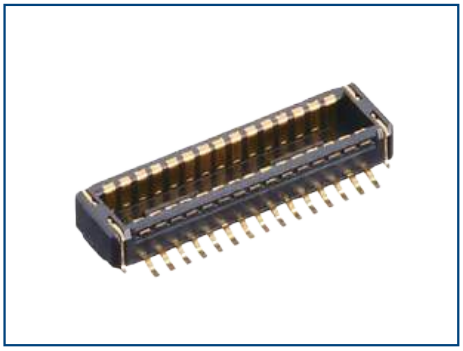

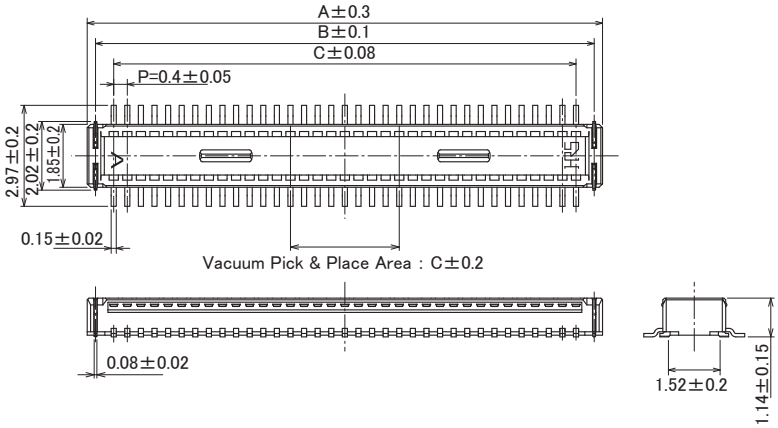

Recommended PCB Pattern

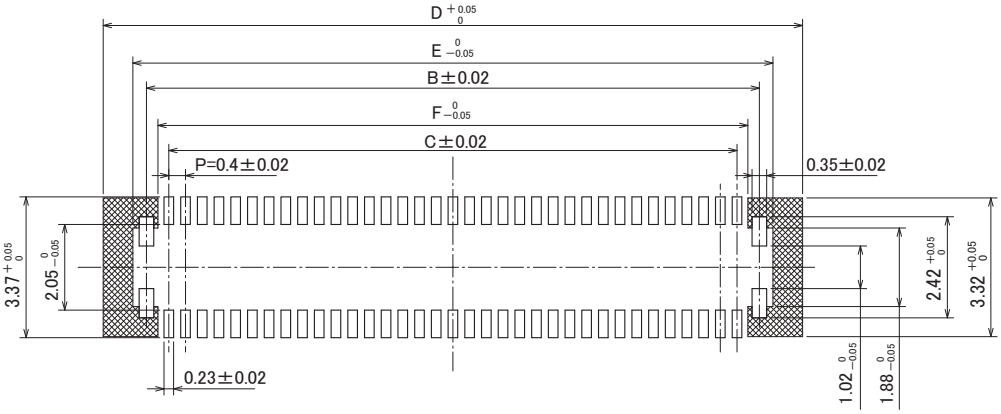

Unit : mm

Part No.	HRS No.	No. of Pos.	A	B	C	D	E	F	G	Purchase Unit (##):(51)	Purchase Unit (##):(58)
DF40GB-10DP-0.4V(##)	CL0684-4225-5-##	10	3.16	2.67	1.6	4.74	3.32	2.12	1.0	○	○
DF40GB-30DP-0.4V(##)	CL0684-4200-4-##	30	7.16	6.67	5.6	8.74	7.32	6.12	1.5	○	○
DF40GB-36DP-0.4V(##)	CL0684-4232-0-##	36	8.36	7.87	6.8	9.94	8.52	7.32	2.3	○	-
DF40GB-48DP-0.4V(##)	CL0684-4195-6-##	48	10.76	10.27	9.2	12.34	10.92	9.72	3.2	○	○
DF40GB-70DP-0.4V(##)	CL0684-4199-7-##	70	15.16	14.67	13.6	16.74	15.32	14.12		○	○

【Specification Nmber】
(51) : Embossed Packaging (5,000pcs per reel)
(58) : Embossed Packaging (1,000pcs per reel)

Note 1 : Please order embossed tape packaged items by the reel.
Note 2 : There are no concave areas on plug side contact part to increase the mating strength for 60 pos. or more.
Note 3 : ⊠ is insulation area.
Note 4 : This connector has no polarity.

Jul.1.2026 Copyright 2026 HIROSE ELECTRIC CO., LTD. All Rights Reserved.

Packaging Specifications Diagram (JIS C 0806 Compliant)

Receptacle (Stacking Height 1.5mm)

●Embossed Tape Dimensions

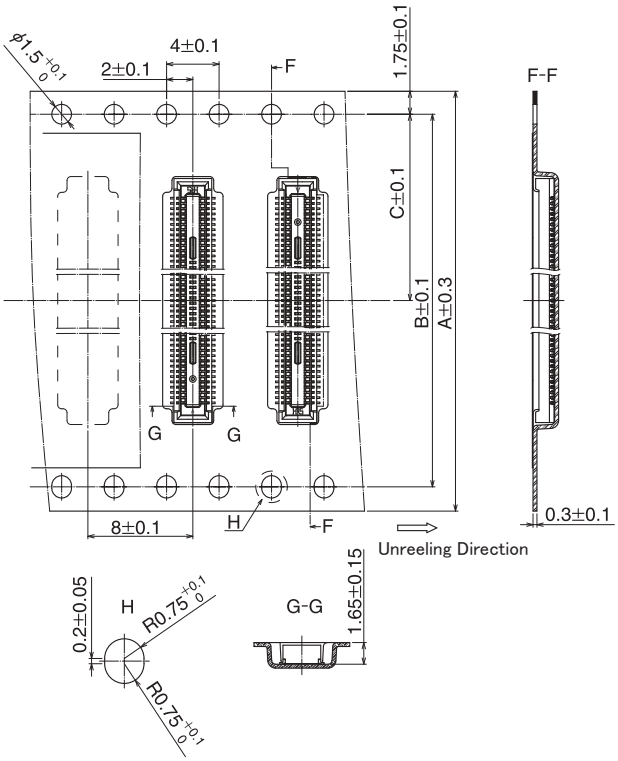

●Reel Dimensions

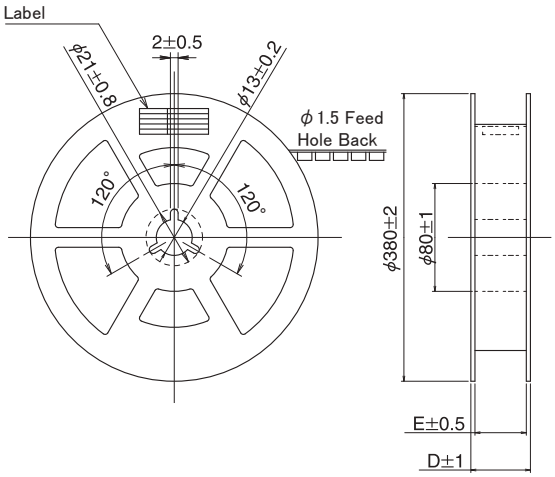

Stacking Height 1.5mm

Unit : mm

Part No.	A	B	C	D	E
DF40B-10DS-0.4V(##)	16	-	7.5	21.5	17.5
DF40B-12DS-0.4V(##)					
DF40B-30DS-0.4V(##)	24		11.5	29.5	25.5
DF40B-50DS-0.4V(##)					
DF40B-60DS-0.4V(##)					
DF40B-80DS-0.4V(##)	32	28.4	14.2	37.5	33.5
DF40C-20DS-0.4V(##)	16	-	7.5	21.5	17.5
DF40C-24DS-0.4V(##)					
DF40C-30DS-0.4V(##)	24		11.5	29.5	25.5
DF40C-34DS-0.4V(##)					
DF40C-40DS-0.4V(##)					
DF40C-50DS-0.4V(##)					
DF40C-60DS-0.4V(##)					
DF40C-70DS-0.4V(##)	32	28.4	14.2	37.5	33.5
DF40C-80DS-0.4V(##)					
DF40C-90DS-0.4V(##)	44	40.4	20.2	49.5	45.5
DF40C-100DS-0.4V(##)					
DF40C-120DS-0.4V(##)					
DF40GB(1.5)-30DS-0.4V(##)	24	-	11.5	29.5	25.5
DF40GB(1.5)-48DS-0.4V(##)					

Note : The hole of the carrier tape for 10 to 60pos. is only one side.

Jul.1.2026 Copyright 2026 HIROSE ELECTRIC CO., LTD. All Rights Reserved.

Receptacle (Stacking Height 2.0 to 2.5mm)

●Embossed Tape Dimensions

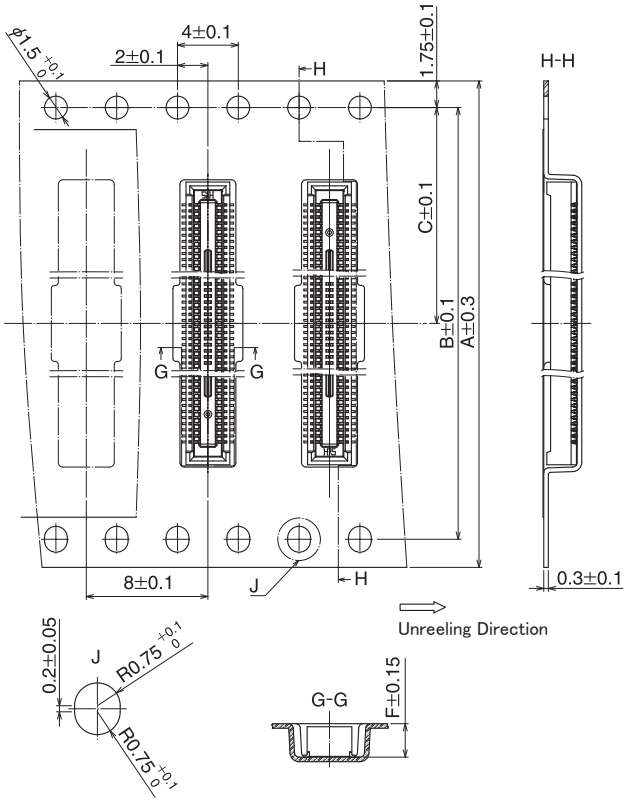

●Reel Dimensions

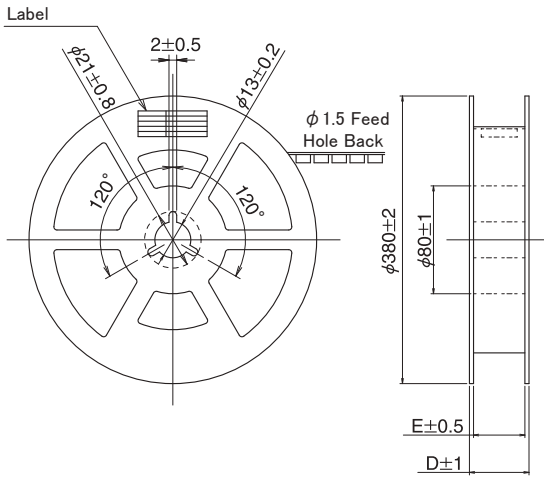

Stacking Height 2.0mm

Unit : mm

Part No.	A	B	C	D	E	F
DF40B(2.0)-12DS-0.4V(##)	16	-	7.5	21.5	17.5	2.2
DF40B(2.0)-80DS-0.4V(##)	32	28.4	14.2	37.5	33.5	
DF40C(2.0)-20DS-0.4V(##)	16	-	7.5	21.5	17.5	
DF40C(2.0)-24DS-0.4V(##)						
DF40C(2.0)-30DS-0.4V(##)	24		11.5	29.5	25.5	
DF40C(2.0)-40DS-0.4V(##)						
DF40C(2.0)-50DS-0.4V(##)						
DF40C(2.0)-60DS-0.4V(##)						
DF40C(2.0)-70DS-0.4V(##)	32	28.4	14.2	37.5	33.5	
DF40C(2.0)-80DS-0.4V(##)						

Stacking Height 2.5mm

Unit : mm

Part No.	A	B	C	D	E	F
DF40HB(2.5)-10DS-0.4V(##)	16	-	7.5	21.5	17.5	2.72
DF40HC(2.5)-20DS-0.4V(##)						
DF40HC(2.5)-30DS-0.4V(##)	24		11.5	29.5	25.5	
DF40HC(2.5)-40DS-0.4V(##)						
DF40HC(2.5)-50DS-0.4V(##)						
DF40HC(2.5)-60DS-0.4V(##)						

Note : The hole of the carrier tape for 10 to 60pos. is only one side.

Jul.1.2026 Copyright 2026 HIROSE ELECTRIC CO., LTD. All Rights Reserved.

Receptacle (Stacking Height 3.0 to 4.0mm)

●Embossed Tape Dimensions

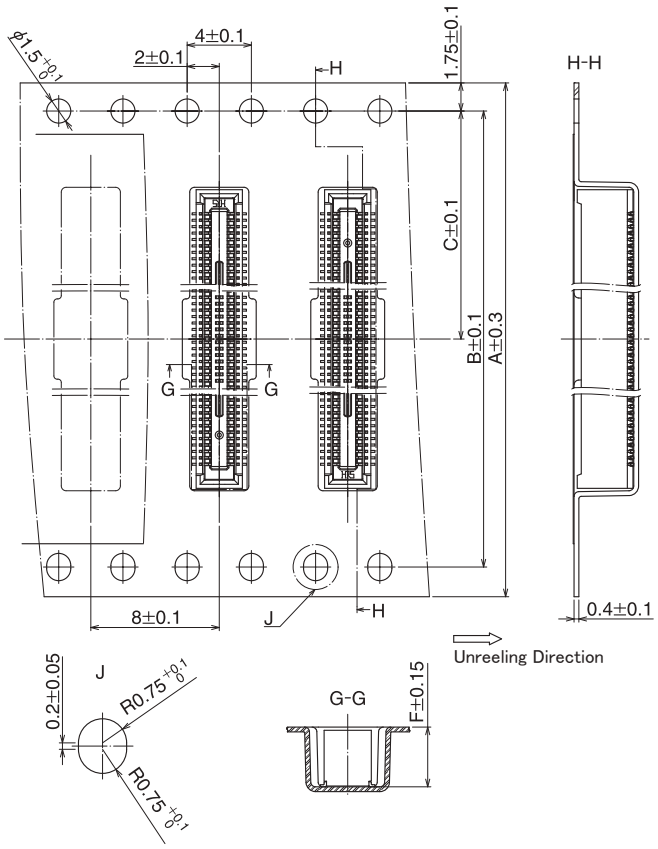

●Reel Dimensions

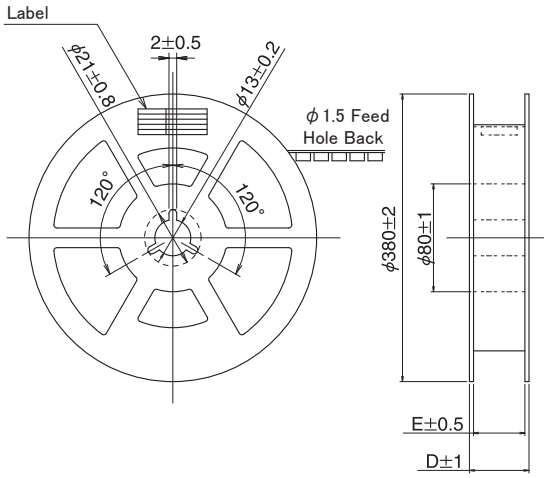

Stacking Height 3.0mm

Unit : mm

Part No.	A	B	C	D	E	F
DF40HC(3.0)-30DS-0.4V(##)	24	-	11.5	29.5	25.5	3.15
DF40HC(3.0)-40DS-0.4V(##)						
DF40HC(3.0)-44DS-0.4V(##)						
DF40HC(3.0)-50DS-0.4V(##)						
DF40HC(3.0)-60DS-0.4V(##)						
DF40HC(3.0)-70DS-0.4V(##)	32	28.4	14.2	37.5	33.5	
DF40HC(3.0)-80DS-0.4V(##)						
DF40HC(3.0)-90DS-0.4V(##)	44	40.4	20.2	49.5	45.5	
DF40HC(3.0)-100DS-0.4V(##)						
DF40GB(3.0)-48DS-0.4V(##)	24	-	11.5	29.5	25.5	
DF40GB(3.0)-70DS-0.4V(##)	32	28.4	14.2	37.5	33.5	

Stacking Height 3.5mm

Unit : mm

Part No.	A	B	C	D	E	F
DF40HC(3.5)-20DS-0.4V(##)	16	-	7.5	21.5	17.5	3.72
DF40HC(3.5)-30DS-0.4V(##)	24		11.5	29.5	25.5	
DF40HC(3.5)-40DS-0.4V(##)						
DF40HC(3.5)-50DS-0.4V(##)						
DF40HC(3.5)-60DS-0.4V(##)						
DF40HC(3.5)-80DS-0.4V(##)	32	28.4	14.2	37.5	33.5	

Jul.1.2026 Copyright 2026 HIROSE ELECTRIC CO., LTD. All Rights Reserved.

Stacking Height 4.0mm

Unit : mm

Part No.	A	B	C	D	E	F
DF40HB(4.0)-50DS-0.4V(##)	24	-	11.5	29.5	25.5	4.15
DF40HC(4.0)-40DS-0.4V(##)						
DF40HC(4.0)-50DS-0.4V(##)						
DF40HC(4.0)-60DS-0.4V(##)						
DF40HC(4.0)-80DS-0.4V(##)	32	28.4	14.2	37.5	33.5	
DF40HC(4.0)-90DS-0.4V(##)	44	40.4	20.2	49.5	45.5	

Jul.1.2026 Copyright 2026 HIROSE ELECTRIC CO., LTD. All Rights Reserved.

Plug

●Embossed Tape Dimensions

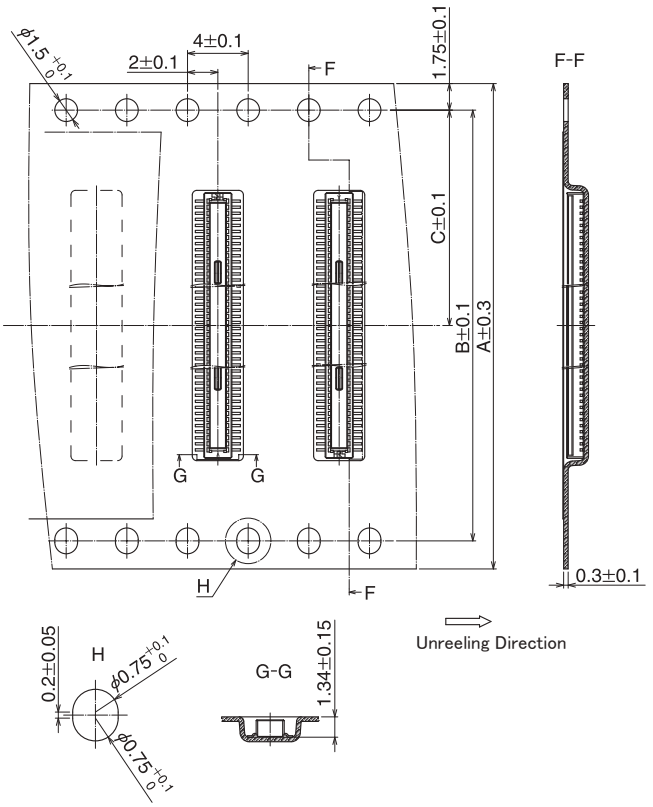

●Reel Dimensions

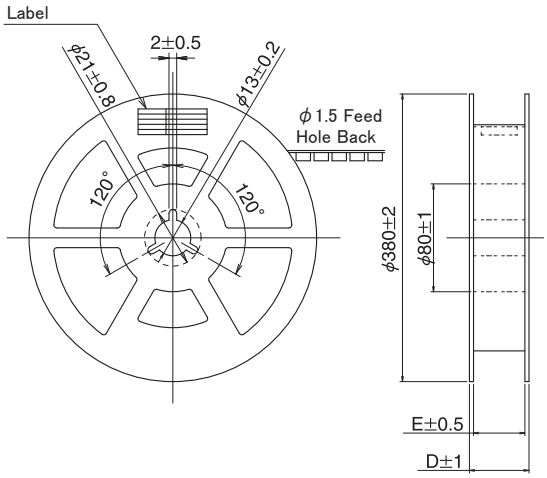

Unit : mm

Part No.	A	B	C	D	E
DF40C-10DP-0.4V(##)	12	-	5.5	17.5	13.5
DF40C-12DP-0.4V(##)					
DF40C-20DP-0.4V(##)	16		7.5	21.5	17.5
DF40C-24DP-0.4V(##)					
DF40C-30DP-0.4V(##)					
DF40C-34DP-0.4V(##)	24		11.5	29.5	25.5
DF40C-40DP-0.4V(##)					
DF40C-44DP-0.4V(##)					
DF40C-50DP-0.4V(##)					
DF40C-60DP-0.4V(##)					
DF40C-70DP-0.4V(##)	32	28.4	14.2	37.5	33.5
DF40C-80DP-0.4V(##)					
DF40C-90DP-0.4V(##)	44	40.4	20.2	49.5	45.5
DF40C-100DP-0.4V(##)					
DF40C-120DP-0.4V(##)					
DF40GB-10DP-0.4V(##)	12	-	5.5	17.5	13.5
DF40GB-30DP-0.4V(##)	16		7.5	21.5	17.5
DF40GB-36DP-0.4V(##)	24		11.5	29.5	25.5
DF40GB-48DP-0.4V(##)					
DF40GB-70DP-0.4V(##)					

Note : The hole of the carrier tape for 10 to 60pos. is only one side.

Jul.1.2026 Copyright 2026 HIROSE ELECTRIC CO., LTD. All Rights Reserved.

Precautions

Recommended Temperature Profile	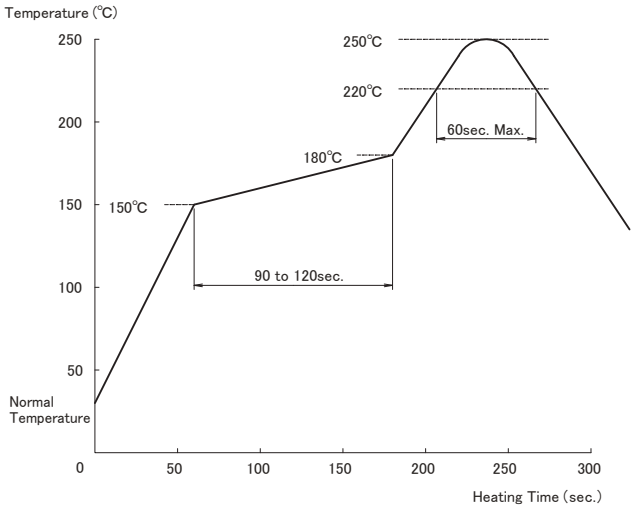 【Conditions】 1. Peak Temperature : 250℃ 2. Heating : 220℃ Min. for 60 sec. Max. 3. Preheating : 150 to 180℃, 90 to 120 sec. 4. Number of Reflow Cycles : 2 cycles Max. ＊Temperature refers to the surface temperature of the board near the connector lead. We recommend reflow mounting in a nitrogen environment.
Recommended Manual Soldering Conditions	Soldering iron temperature : 340 ± 10℃ , Soldering Time : Within 3 sec.
Recommended Metal Mask Thickness and Open Area to PCB Pattern (Area Ratio)	Thickness : 0.12mm, Aperture Ratio : DS 80%　DP 80%
Board Warpage	Max. of 0.02mm at the center in reference to both ends of the connector
Cleaning	Cleaning is not recommended. If you clean this product, please evaluate its performance before using it. (Cleaning may impair the mating/unmating properties and lower resistance to environmental factors.)
Precautions	■ Be careful when mating/unmating the connector when it is not mounted on the PCB as it may cause damage/deformation to contacts. ■ Avoid supporting the PCB only with the connectors. Support it by other means such as bolts, screws, posts, etc. ■ Excessive prying during unmating/mating may result in damage. ■ In the case of hand soldering, please do not apply any flux which could cause flux wicking. ■ This product may have slight color differences due to production lot variability, but this does not affect the performance. ■ Please refer to the following page for handling precautions when inserting and removing. ■ Because the product can disengage if dropped (or other impact), or by FPC routing, it is advised to secure the mated connectors to the board with housings and cushioning materials.

Jul.1.2026 Copyright 2026 HIROSE ELECTRIC CO., LTD. All Rights Reserved.

Handling Precautions for Connector Insertion

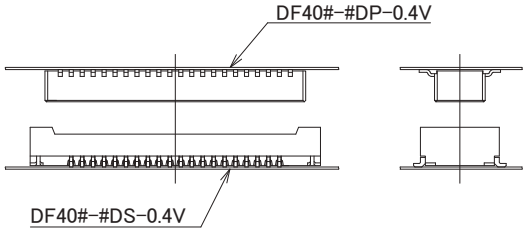	
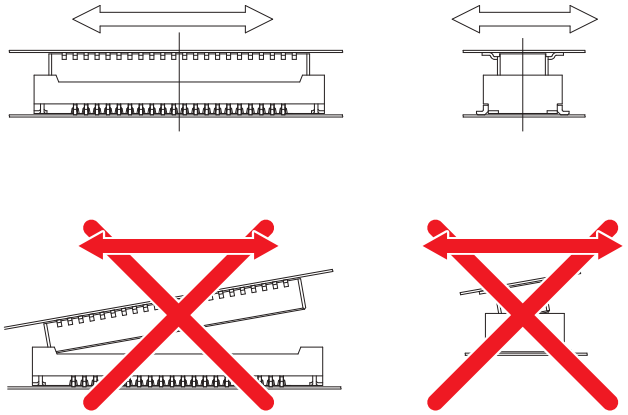	When aligning, look for the entrances without applying excessive force. Please note that applying excessive force may cause broken and shaving of the mold, which may lead to malfunctions of contact resistance
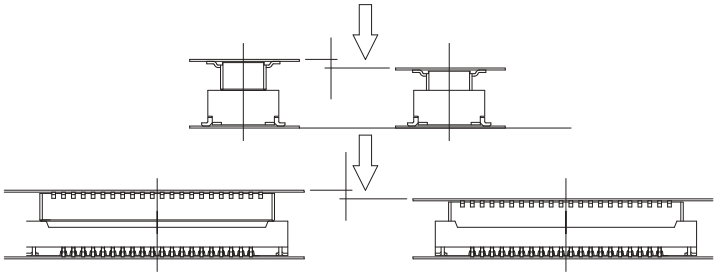	When aligned in, it should drop one step and become parallel, and should be mated parallel from the point where it no longer moves back and forth or side to side.

Jul.1.2026 Copyright 2026 HIROSE ELECTRIC CO., LTD. All Rights Reserved.

Handling Precautions for Connector Removal

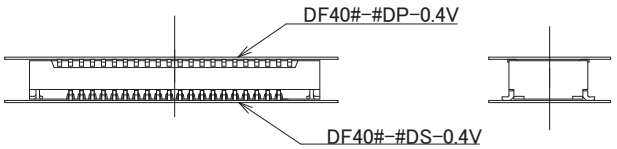	
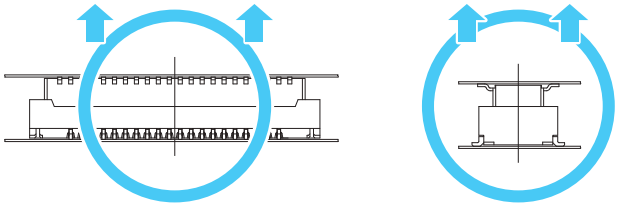	When removing the connector, it is better to pull it out in parallel.
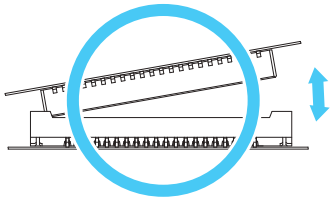 Pitch Direction 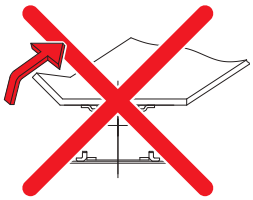 Corner Direction	If parallel extraction is not possible due to handling, remove diagonally from the pitch direction as shown on the left. However, if the FPC is not rigid enough, it may be a defect that causes contact to come out or the connector to break, so please check it when making a prototype. Also, do not pull out from the corner direction as it will put a heavy load on contact.
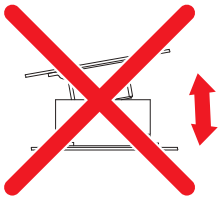 Width Direction	As shown on the left, do not remove the connector from the width direction as it may damage the connector.

Jul.1.2026 Copyright 2026 HIROSE ELECTRIC CO., LTD. All Rights Reserved.

Jul.1.2026 Copyright 2026 HIROSE ELECTRIC CO., LTD. All Rights Reserved.

<table>
<tr><td> 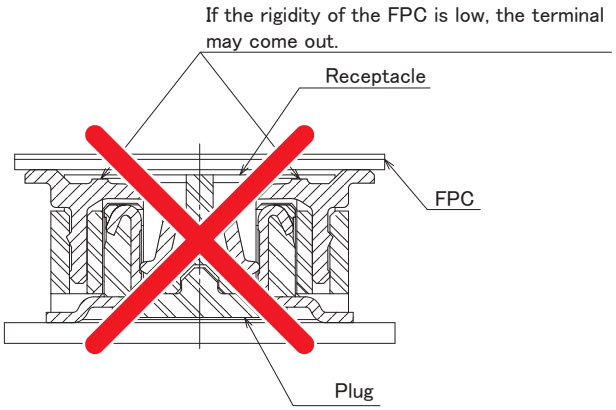
</td><td rowspan="2">If you use a less rigid FPC to mounting receptacle side to the FPC, there is a risk that contact will fall out.
We recommend mounting the plug side on the FPC side.
If you need to mounting the receptacle to the FPC side, please request an FPC stiffness evaluation.</td></tr>
<tr><td> 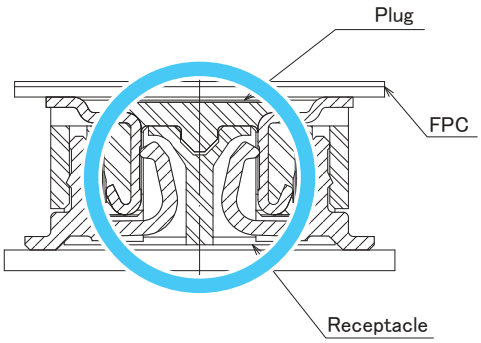
</td></tr>
<tr><td> 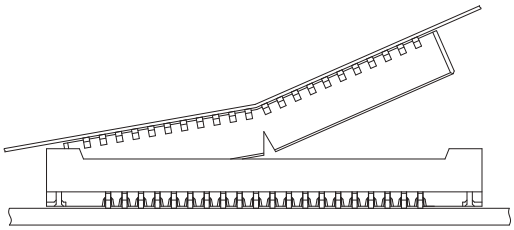 </td><td>Even when the plug side is mounted on the FPC,
if the rigidity of the FPC is low, the connector may break as shown on the left.
Please use the FPC after checking its repetitive operation.
FPC stiffness and evaluation results of each item are available for your request.</td></tr>
</table>

Jul.1.2026 Copyright 2026 HIROSE ELECTRIC CO., LTD. All Rights Reserved.

While Taking into Consideration

Specifications mentioned in this catalog are reference values.
When considering to order or use this product, please review the Drawing and Product Specifications sheets.
Use an appropriate cable when using the connector in combination with cables.
If considering usage of a non-specified cable, please contact your sales representative.
If assembly process is done by jigs & tools which are not identified by Hirose, the warranty of the product may be affected.
If considering usage for below mentioned applications, please contact your sales representative.
In cases where the application will demand a high level of reliability, such as automotive, medical instruments, public infrastructure, aerospace/defense etc. Hirose must review before assurance of reliability can be given.

HIROSE

HIROSE ELECTRIC CO.,LTD. 2-6-3,Nakagawa Chuoh,Tsuzuki-Ku,Yokohama-Shi 224-8540,JAPAN
https://www.hirose.com

※The contents of this catalog are current as of date of 1/2025. Contents are subject to change without notice for the purpose of improvements.
※The HRS logo and "HIROSE" are trademarks of HIROSE ELECTRIC CO., LTD.