# Sine encoders

## End shaft max. ø20 mm or cone shaft ø17 mm (1:10)

## Resolution 720...5000 pulses

## HOGS 100

HOGS 100

### Features

- **Encoder with end shaft max. ø20 mm or cone shaft ø17 mm (1:10)**
- **Resolution max. 5000 ppr**
- **Low harmonic content (patented LowHarmonics technology)**
- **Top-quality sine signals**
- **Protection against inductive shaft current**
- **Big terminal box, turn by 180°**

### Technical data - electrical ratings

| | |
|---|---|
| Voltage supply | 5 VDC ±10 %<br>9...30 VDC |
| Consumption w/o load | ≤90 mA |
| Resolution (steps/turn) | 720...5000 |
| Phase shift | 90° |
| Reference signal | Zero pulse, width 90° |
| Sensing method | Optical |
| Output signals | K1, K2, K0 + inverted |
| Output circuit | Sine/cosine 1 Vpp |
| Interference immunity | DIN EN 61000-6-2 |
| Emitted interference | DIN EN 61000-6-4 |
| Approval | UL approval / E256710 |
| Offset sine/cosine amplitude | ≤20 mV |
| Harmonics share approx. | -50 dB |
| Spectrum | 250 kHz (-3 dB) |
| Overlaying constant share | ≤20 mV |

### Technical data - mechanical design

| | |
|---|---|
| Dimensions (flange) | ø105 mm |
| Shaft | ø12...20 mm end shaft<br>ø17 mm cone shaft 1:10 |
| Shaft loading | ≤250 N axial<br>≤400 N radial |
| Protection DIN EN 60529 | IP 66 |
| Operating speed | ≤10000 rpm (mechanical) |
| Operating torque typ. | 6 Ncm |
| Rotor moment of inertia | 180 gcm² |
| Materials | Housing: aluminium die-cast<br>Shaft: stainless steel |
| Operating temperature | -20...+85 °C |
| Resistance | IEC 60068-2-6<br>Vibration 10 g, 10-2000 Hz<br>IEC 60068-2-27<br>Shock 100 g, 6 ms |
| Explosion protection | II3G Ex nA IIC T4 Gc (gas)<br>II3D Ex tc IIIC T135°C Dc (dust) |
| Connection | Terminal box |
| Weight approx. | 1.6 kg |

Subject to modification in technic and design. Errors and omissions excepted.

## HOGS 100

### Part number

**HOGS 100** | **DN** | | | | |

Voltage supply
- \- 5 VDC
- R 9...30 VDC

See part number (pulses)

Output signals
- DN K1, K2, K0 + inverted

### Part number (pulses)

| | | | | |
|---|---|---|---|---|
| 720 | 800 | 1024 | 2048 | 5000 |

### Accessories

**Connectors and cables**

| | |
|---|---|
| HEK 8 | Sensor cable for encoders |

**Mounting accessories**

| | |
|---|---|
| DMS 6 | Torque arm size M6 |

**Diagnostic accessories**

| | |
|---|---|
| HENQ 1100 | Analyzer for encoders |

Subject to modification in technic and design. Errors and omissions excepted.

# Sine encoders

## End shaft max. ø20 mm or cone shaft ø17 mm (1:10)

## Resolution 720...5000 pulses

### HOGS 100

**Output signals**

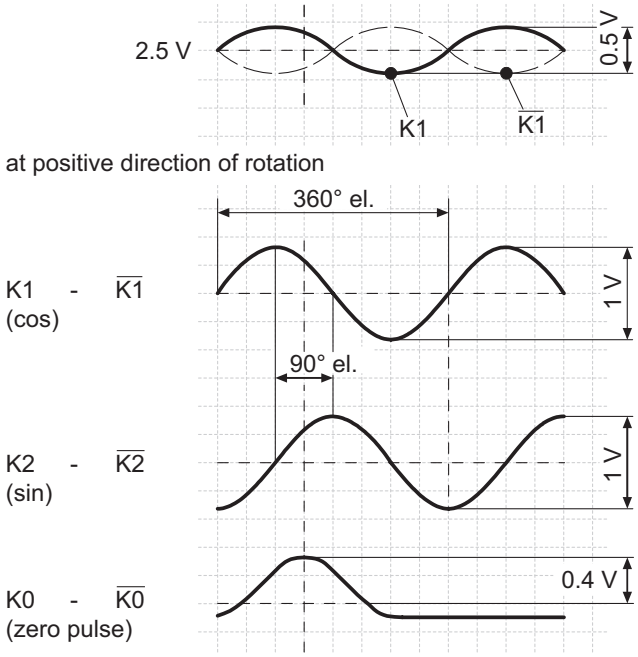


**Terminal assignment**

**View A** - Connecting terminal in terminal box

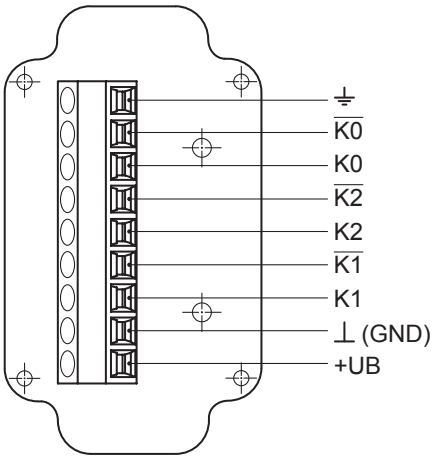





18/6/2012 Subject to modification in technic and design. Errors and omissions excepted.

### Dimensions

**End shaft design**

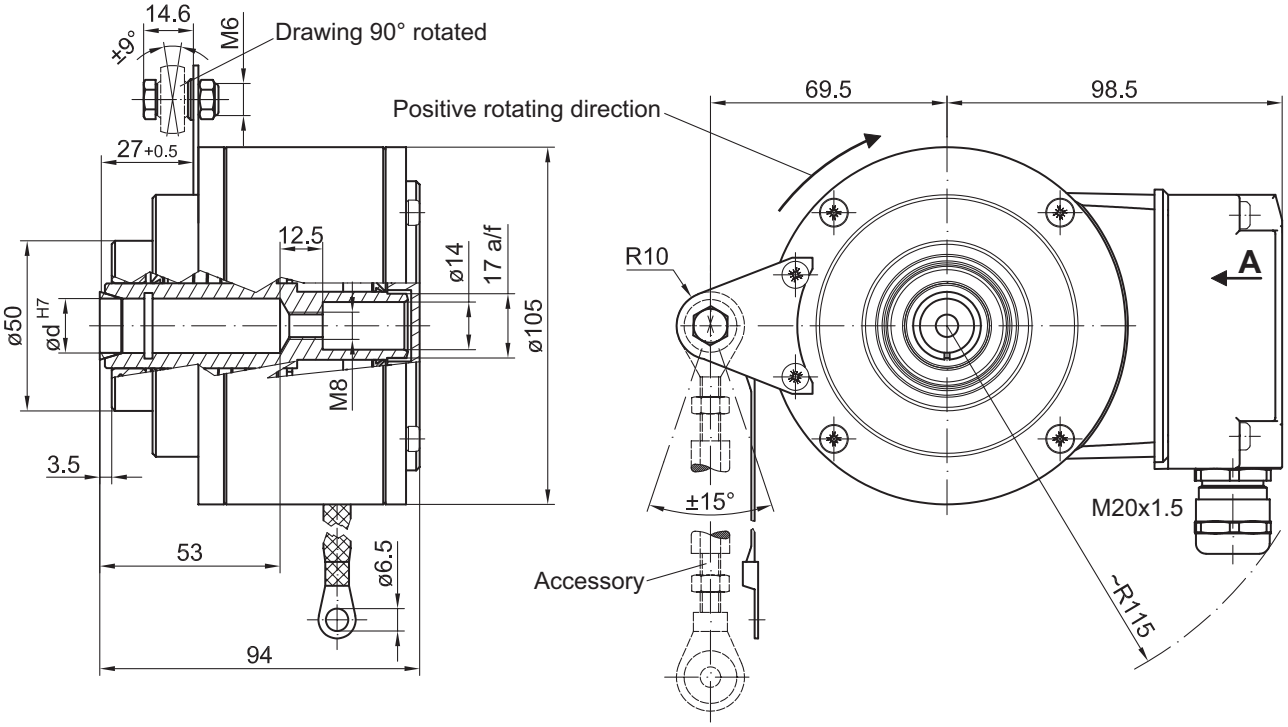





18/6/2012 Subject to modification in technic and design. Errors and omissions excepted.