Accessories
Mounting accessories

Z 119.013

Part number	
Z 119.013	Adaptor plate for clamping flange for modification into synchro flange

Suitable for

G0355, GA210, GA240, GBA2W, GBAMW, GBMMW, GBP5W, GI355, GI357, GM400, GPI0W, GXA1W, GXAMW, GXL2W, GXM7W, GXMMW, GXN1W, GXP1W, GXP2W, GXP5W, GXP6W, GXP8W

Dimensions

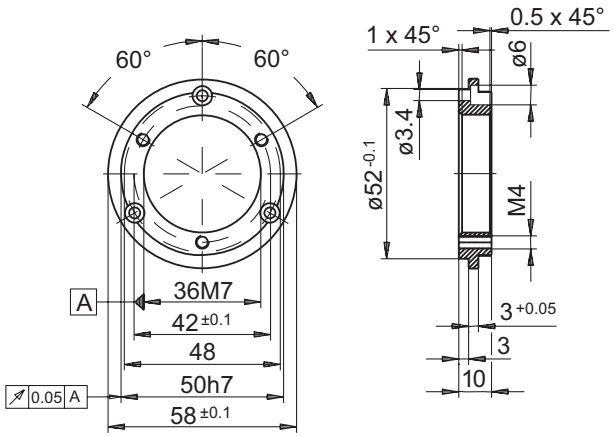

5/4/2012 Subject to modification in technic and design. Errors and omissions excepted.