REV.	DESCRIPTION	DATE
A	NEW DRAWING	11/19/2008
B	update to tolerance	9/8/2009

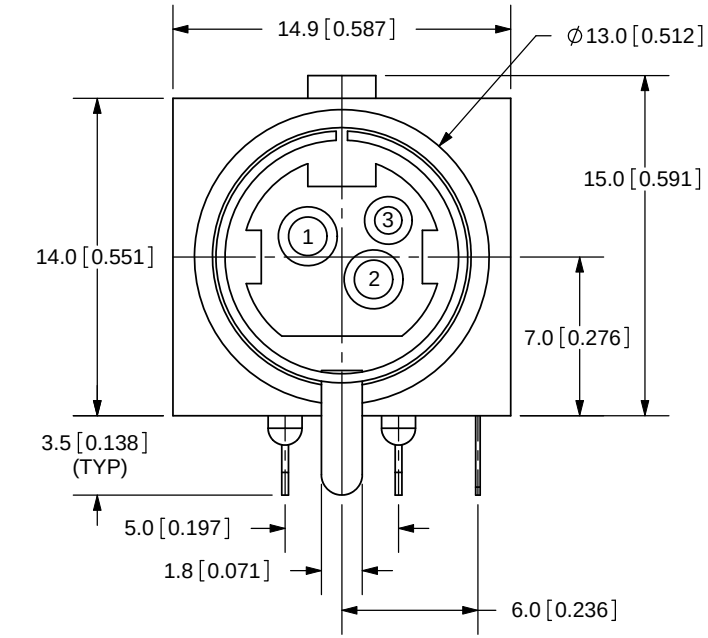

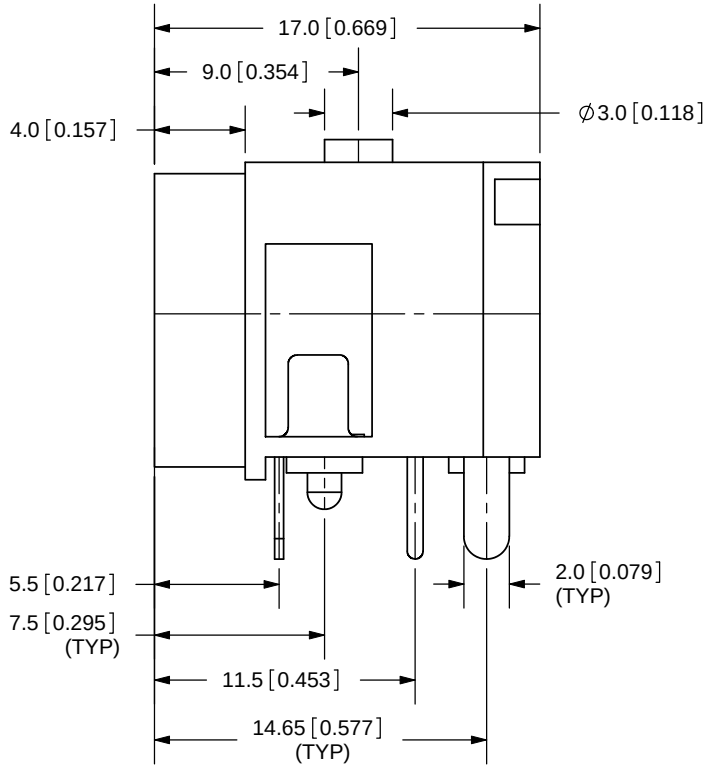

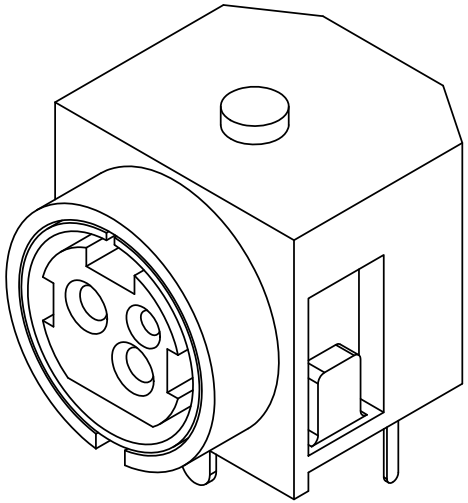

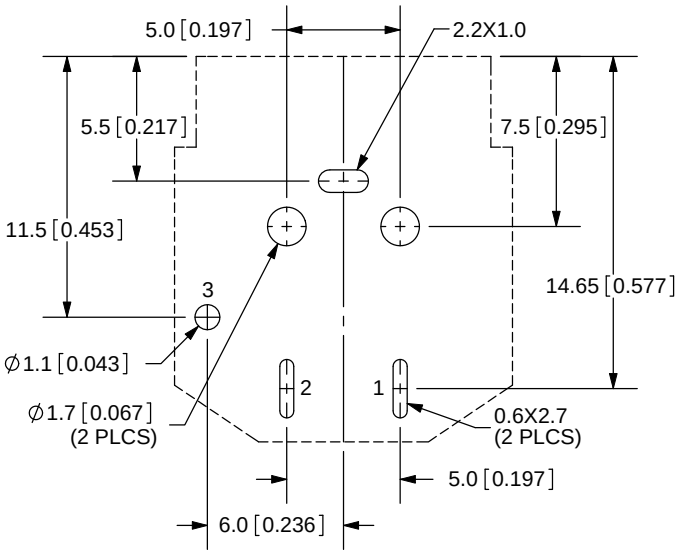

PCB LAYOUT
TOP VIEW

TOLERANCE:
±0.2mm UNLESS OTHERWISE SPECIFIED

RoHS

SPECIFICATIONS:
RATING: 20V DC@ 7.5A
CONTACT RESISTANCE: 30m OHMS MAX
INSULATION RESISTANCE: 50M OHMS MIN: 250V DC
VOLTAGE WITHSTAND: 250V AC R.M.S. FOR 1 MINUTE
INSERTION FORCE: 6.0KG MAX
WITHDRAWAL FORCE: 0.5 - 6.0KG
LIFE: 1,000 CYCLES

	MATERIAL	PLATING
TERMINAL 1	Phosphor Bronze	Tin
TERMINALS 2-3	Brass	Tin
EARTH TERMINAL	Brass	Tin
HOUSING	PBT	

CUI INC
20050 SW 112th Ave.
Tualatin, OR 97062
Phone: 503-612-2300
800-275-4899
Fax: 503-612-2383
Website: www.cui.com

TITLE: 3-PIN POWER DIN JACK, RIGHT ANGLE, NO SHIELDING
REV: B
PART NO. PD-30
UNITS: MM [INCHES]
DRAWN BY: ZRJ
APPROVED BY:
SCALE: 3:1

PC FILE NAME: PD-30

COPYRIGHT 2008 BY CUI INC.