REV.	DESCRIPTION	DATE
A	NEW DRAWING	7/24/2007
B	Updated Dimensions	8/10/2012

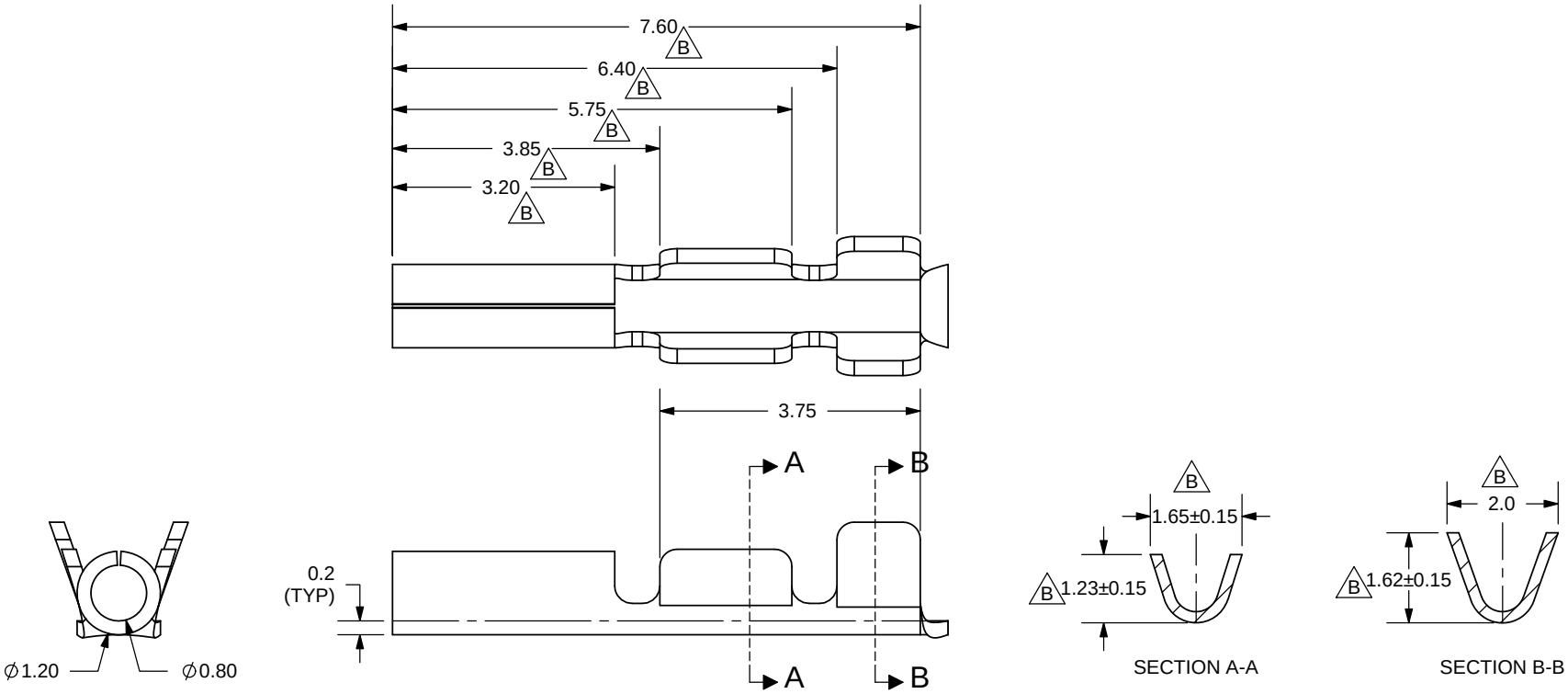

WIRE GAUGE: 26-28 AWG

TOLERANCE:
±0.1mm unless otherwise noted

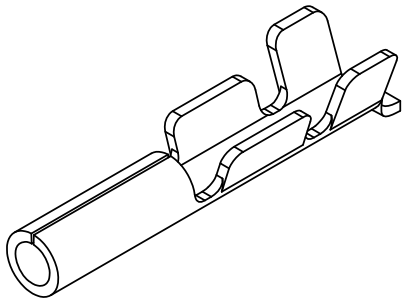

CUI INC

20050 SW 112th Ave.
Tualatin, OR 97062
Phone: 503-612-2300
800-275-4899
Fax: 503-612-2383
Website: www.cui.com

TITLE: CRIMP PIN		REV: B
PART NO. T-0006		UNITS: MM [INCHES]
DRAWN BY: RDS	APPROVED BY:	SCALE: 8:1

PC FILE NAME: T-0006

COPYRIGHT 2007 BY CUI INC.