TAP1000 and 2000

1000 & 2000 Watt
Heat Sinkable Planar

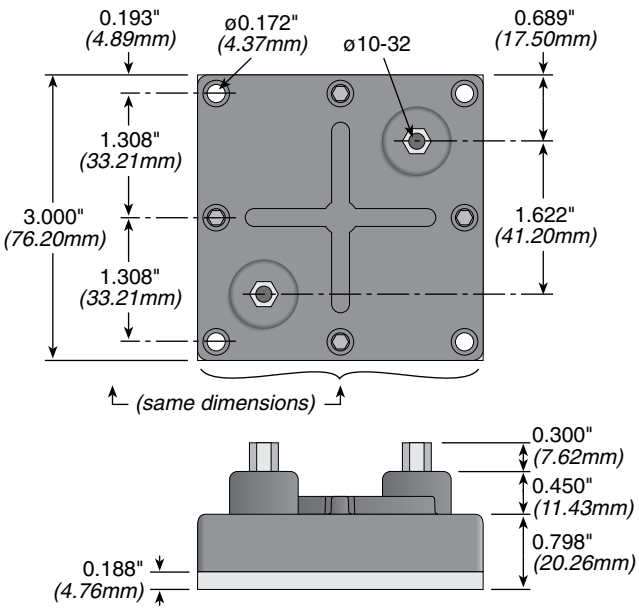

The TAP series delivers 1000W or 2000W of continuous power when properly mounted to a liquid cooled heat sink (based on 85°C mounting plate temperature)

Applications include power conditioning, power distribution, power conversion, and power control.

FEATURES

- High Energy Rating
- Low Inductance
- Resistor Element Electrically Isolated
- High Dielectric Strength
- Small Footprint

APPLICATIONS

- Power semiconductor balancing
- Motor control
- Inrush Current Limiting

DERATING CURVE

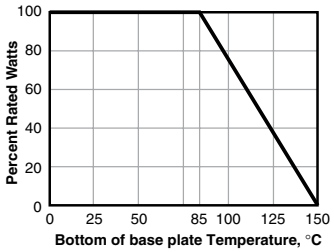

SPECIFICATIONS

Material

Resistor Element: Thick Film on Alumina Substrate

Electrical

Power Rating: 1000W or 2000W at 85°C mounting plate

Resistance Values: 0.5Ω to 1000Ω

Resistance Tolerance: +10% std.

Max Operating Voltage: 2000VDC

Temperature Coefficient: ± 250 PPM/°C

Dielectric Strength: 6KV standard

Operating Temperature Range: -55°C to 85°C

Case

Terminal Screws: #10-32

Max Contacts Torque: 10 in-lb

Mounting Screws: #8-32

Max Mounting Torque: 15 in-lb

Creepage Distance: 50mm ± 1mm (min)

PERFORMANCE DATA

Test	Rating	
	Continuous	Pulse
Rated Power, max. current and heat sink plate temperature limited	(TA1K0) 1000W (TA2K0) 2000W	
Operating Voltage	$\sqrt{P*R}$	N/A
Max. Applied Voltage, ohms law limited	223V	2000VDC
Max. Current	10A	53.33A
Critical Resistance; below this resistance max power has to be de-rated due to exceeding max current	(TA1K0) 10Ω (TA2K0) 20Ω	

Test	Method	Maximum ΔR
Short Time Overload	1.14 x $\sqrt{P*R}$ / 10 sec @ 70°C	Max % ΔR_{sto} = ±(2% + 0.05Ω)
Moisture Resistance	(TA1K0) 1000 hrs @ 40°C, 90-95% RH (TA2K0) 1750 hrs @ 40°C, 90-95% RH	≤1% ≤1%
Thermal Shock	MIL-STD-202, Method 107	MIL-STD-202, Method 107
Vibration, elec.	MIL-STD-202, Method 201	±2% Resistance
Vibration, mech.	MIL-STD-202, Method 201	No Loose Terminal Screws
Load Life	(TA1K0) 1000 Hrs 90 min ON / 30 min OFF (TA2K0) 1750 Hrs 90 min ON / 30 min OFF	≤1% ≤1%
Pulse Tolerance 20,000 Pulses	52µF @ 2KV / 60 sec intervals, 104J	≤1%
Dielectric Strength	6KVDC for 1 minute	≤1%

APPLICATION NOTES

Proper heat sinking techniques are essential to performance of a TAP resistor. Pleased follow these guidelines when designing TAP system:

- Heats sink plate (base plate of the resistor) temperature must be monitored to establish proper de-rating. Best technique is to attach a thermocouple to the side of the base plate of the resistor. Temperature of plastic housing or heat sink cannot be used to establish rating of the resistor. Usage of laser thermometers should be avoided.
- To obtain a power rating of 1000W or 2000W, the bottom case temp must not exceed 85°C. This can only be achieved if the thermal conduction to the heatsink R_{th}-cs<0.025°K/W. This value can be reached by using thermal transfer compound with a heat conductivity of 1W/mK. The flatness of the cooling plate must be better than 0.05mm overall. The roughness of the surface should not exceed 6.4µm.
- Due to very high power density, only liquid cooled heat sinks are recommended for applications when >300W power rating is desired.
- Properly designed heat sink should have more than 2 cooling pipes under the surface of the TAP resistor. The Hydroblok, a 4 pass aluminum heat sink (http://www.ohmite.com/ta1k0-sink.html) is an example of properly designed heat sink.

ORDERING INFORMATION

RoHS Compliant

TA1K0PH2R50KE

Style	Wattage	Package Type	Resistance	Tolerance
			2.5Ω = 2R50 50Ω = 50R0	K = 10% (standard) L = 20%

Check product availability at **www.ohmite.com**

STANDARD PART NUMBERS FOR TAP SERIES

Ohms	1000 Watt 10% Tolerance	Ohms	2000 Watt 10% Tolerance
0.5	TA1K0PHR500KE	0.5	TA2K0PHR500KE
1	TA1K0PH1R00KE	1	TA2K0PH1R00KE
2.5	TA1K0PH2R50KE	2.5	TA2K0PH2R50KE
5	TA1K0PH5R00KE	5	TA2K0PH5R00KE
7.5	TA1K0PH7R50KE	7.5	TA2K0PH7R50KE
10	TA1K0PH10R0KE	10	TA2K0PH10R0KE
15	TA1K0PH15R0KE	15	TA2K0PH15R0KE
25	TA1K0PH25R0KE	25	TA2K0PH25R0KE
50	TA1K0PH50R0KE	50	TA2K0PH50R0KE
100	TA1K0PH100RKE	100	TA2K0PH100RKE
250	TA1K0PH250RKE	250	TA2K0PH250RKE
500	TA1K0PH500RKE	500	TA2K0PH500RKE
750	TA1K0PH750RKE	750	TA2K0PH750RKE
1000	TA1K0PH1K00KE	1000	TA2K0PH1K00KE