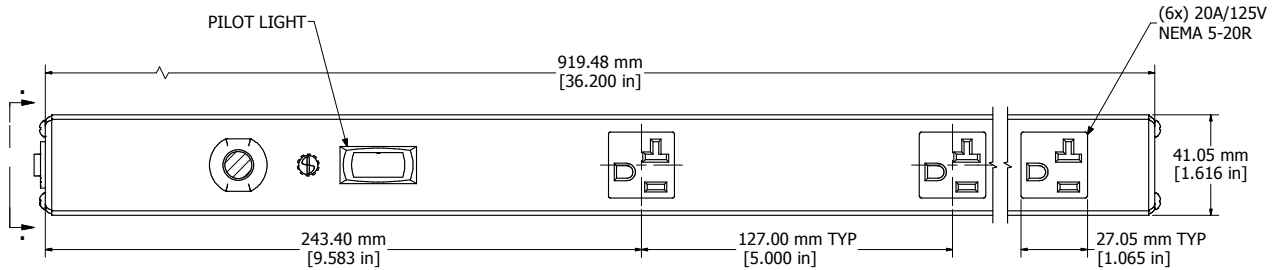


SECTION A-A
(VIEW FROM FRONT)

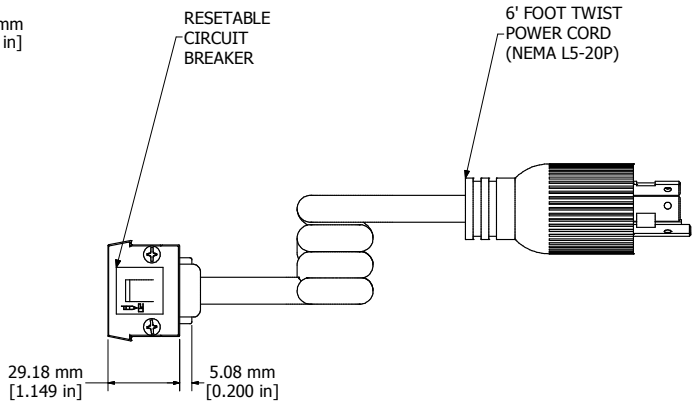


ASSEMBLY - VIEW FROM END

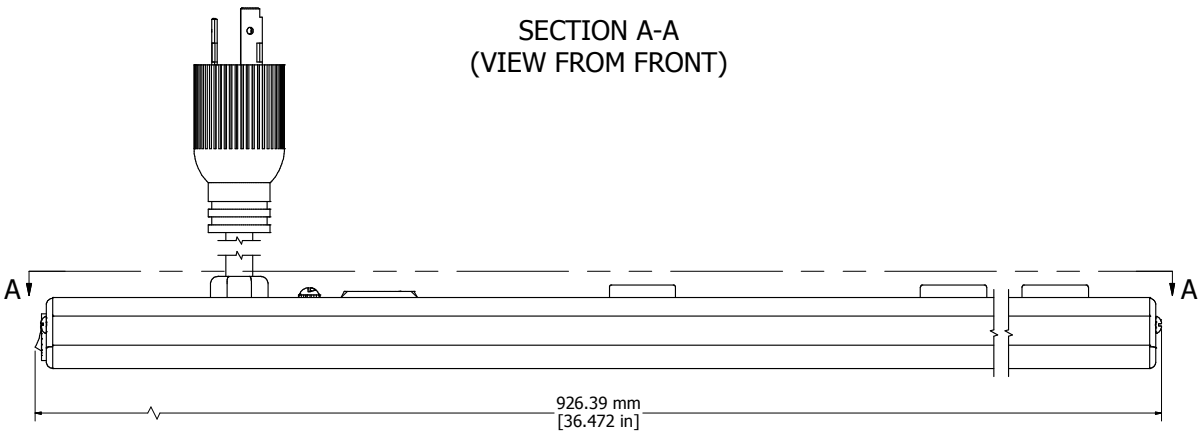


ASSEMBLY - VIEW FROM SIDE

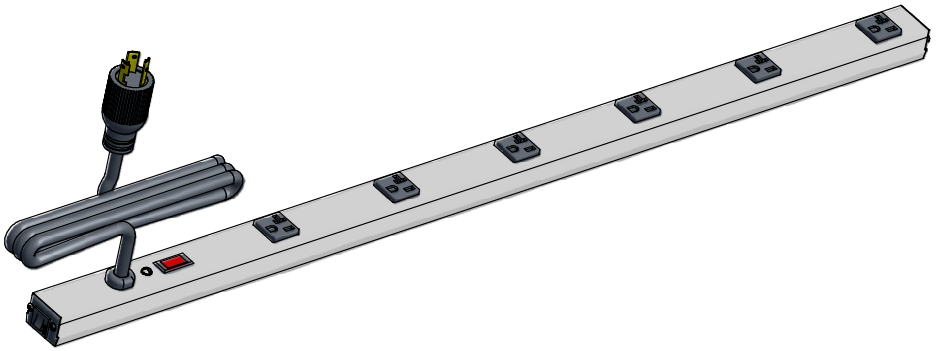

ISOMETRIC VIEW

| 1589T36C1 |
|---|
| Finish - Case - Anodized Aluminum Extrusion |
| Ends - ABS Plastic |
| Rated - 125 VAC, 60 Hz, 20 Amps |
| Approvals - CSA Certified Standards C22.2 (No. 21-95, 42-99) |
| - UL Listed Standard UL1363 |
| **Cord Length** |
| 1589T36C1 - 6' Foot Twist Power Cord (NEMA L5-20P) |
| 1589T36D1 - 15' Foot Twist Power Cord (NEMA L5-20P) |
| **Accessories Included** |
| Mounting Bracket Kit with Hardware |

HAMMOND MANUFACTURING™

1589T36C1

www.hammondmfg.com