DALLAS SEMICONDUCTOR

DS80CH11
System Energy Manager

PRODUCT SPECIFICATION

V2.1

TABLE OF CONTENTS

1.0 **GENERAL DESCRIPTION** 5
- 1.1 OVERVIEW 5
- 1.2 DETAILED FEATURE SUMMARY 7
- 1.3 CONVENTIONS 7
- 1.4 ADDITIONAL REFERENCES 7

2.0 **PIN DESCRIPTION** 8
- 2.1 PIN FUNCTION SUMMARY 9
- 2.2 PIN CHARACTERISTICS 14

3.0 **CORE MICROCONTROLLER** 19
- 3.1 CORE MICRO OVERVIEW 19
- 3.2 INSTRUCTION SET SUMMARY 19
- 3.3 SPEED IMPROVEMENT 21
- 3.4 INSTRUCTION SET ADDITIONAL REFERENCES 21
- 3.5 RESET 21
- 3.6 INTERRUPT CONTROL 22

4.0 **MEMORY RESOURCES** 24
- 4.1 OVERVIEW 24
- 4.2 DATA MEMORY ACCESS 24
  - 4.2.1 Stretch Memory Cycle 24
  - 4.2.2 Dual Data Pointer 25
- 4.3 EXTERNAL MEMORY INTERFACE 25
- 4.4 DIRECT (SCRATCHPAD) RAM ACCESS 25
- 4.5 SPECIAL FUNCTION REGISTERS 25

5.0 **CORE I/O RESOURCES** 30
- 5.1 PROGRAMMABLE TIMERS 30
- 5.2 SERIAL PORTS 30
- 5.3 WATCHDOG TIMER 30
- 5.4 PARALLEL I/O PORTS 31
  - 5.4.1 Alternate Pin Function Summary 31

6.0 **2–Wire SERIAL INTERFACE** 33
- 6.1 INTRODUCTION 33
- 6.2 REGISTER DESCRIPTION 34
  - 6.2.1 2WFSx – 2–Wire Frequency Select Registers 34
  - 6.2.2 2WDATx – 2–Wire Data I/O Registers 34
  - 6.2.3 2WSADRx – 2–Wire Slave Address Registers 34
  - 6.2.4 2WCONx – 2–Wire Control Registers 35
  - 6.2.5 2WSTAT1x – 2–Wire Status Register 1 36
  - 6.2.6 2WSTAT2x – 2–Wire Status Register 2 36
- 6.3 OPERATION DESCRIPTION 37
  - 6.3.1 Master Transmit 38
  - 6.3.2 Master Receive 39
  - 6.3.3 Slave Receive 40

6.3.4 Slave Transmit 41
6.3.5 Bus Monitor Mode Operation 43
7.0 **A/D CONVERTER** 44
7.1 OVERVIEW 44
7.2 ANALOG POWER / SLEEP MODE 44
7.3 REFERENCE OPTION 45
7.4 SAR A/D CONVERTER 45
7.5 CONVERSION TIME 46
7.6 WINDOW COMPARATOR 47
7.7 A/D OPERATION 48
7.8 A/D SPECIAL FUNCTION REGISTERS 49
7.8.1 ADCON1 – A/D Control Register 1 49
7.8.2 ADCON2 – A/D Control Register 2 50
7.8.3 ADMSB – A/D Result Most Significant Byte 50
7.8.4 ADLSB – A/D Result Least Significant Byte 51
7.8.5 WINHI – A/D Window Comparator High Byte 51
7.8.6 WINLO – A/D Window Comparator Low Byte 51
8.0 **ACTIVITY MONITOR/LED CONTROL** 52
8.1 OVERVIEW 52
8.2 ACTIVITY MONITOR INPUT OPERATION 52
8.3 AME – ACTIVITY MONITOR ENABLE REGISTER 53
8.4 AMQ – ACTIVITY MONITOR QUALIFIER REGISTER 53
8.5 AMP – ACTIVITY MONITOR POLARITY REGISTER 54
8.6 AMF – ACTIVITY MONITOR FLAG REGISTER 54
8.7 LED CONTROL 54
9.0 **HOST INTERFACE PORTS** 55
9.1 OVERVIEW 55
9.2 REGISTER MAPPING 55
9.3 KBDIN / PMDIN – DATA REGISTERS 56
9.4 KBSTAT / PMSTAT – STATUS REGISTERS 57
9.5 KBDOUT / PMDOUT – OUTPUT DATA REGISTERS 58
10.0 **KEYBOARD SCANNING PORTS** 59
10.1 OVERVIEW 59
10.2 KEY SCAN OUTPUTS 59
10.3 KEY SCAN INPUTS 59
10.4 KDE – KEY DETECT ENABLE REGISTER 59
10.5 KDF – KEYBOARD DETECT FLAG REGISTER 59
11.0 **PULSE WIDTH MODULATORS** 60
11.1 FUNCTION OVERVIEW 60
11.2 PRESCALER 60
11.3 PWM CLOCK GENERATORS 60
11.4 PWM PULSE GENERATORS 61
11.5 PWM SPECIAL FUNCTION REGISTERS 62
11.5.1 PW01CS / PW23CS – PWM 0, 1 / PWM 2, 3 Clock Select Registers 62
11.5.2 PW01CON / PW23CON – PWM 0, 1 / PWM 2, 3 Control Register 63
11.5.3 PWnFG – PWM n Frequency Generator Registers 63
11.5.4 PWMn – PWM n Value Registers 64
12.0 **MICROCONTROLLER POWER MANAGEMENT** 66
12.1 POWER–DOWN / POWER–UP OPERATION 66

12.1.1 Microcontroller Power Fail Reset 66
12.2 LOW POWER OPERATING MODES 66
12.2.1 Slow Clock Mode 66
12.2.1.1 Crystaless Slow Clock Mode 67
12.2.1.2 Slow Clock Mode Operation 67
12.2.1.3 Clock Divider 67
12.2.1.4 Switchback 68
12.2.1.5 Status 68
12.2.1.6 Crystal / Ring Operation 68
12.2.2 Idle Mode 71
12.2.3 Stop Mode and Enhancements 71
13.0 **+5.0V ELECTRICAL SPECIFICATIONS** 74
13.1 ABSOLUTE MAXIMUM RATINGS* 74
13.2 MICROCONTROLLER DC ELECTRICAL CHARACTERISTICS 74
13.3 MICROCONTROLLER AC ELECTRICAL CHARACTERISTICS 76
13.3.1 External Program Memory Characteristics 76
13.3.2 MOVX Using Stretch Memory Cycles 77
13.3.3 External Clock Characteristics 78
13.3.4 Serial Port Mode 0 Timing Characteristics 78
13.3.5 Power Cycle Timing Characteristics 79
13.4 SYSTEM INTERFACE DC ELECTRICAL CHARACTERISTICS 83
13.5 HOST I/F AC TIMING CHARACTERISTICS 84
13.6 2–Wire AC TIMING CHARACTERISTICS 86
13.7 A/D CONVERTER SPECIFICATIONS 87
13.7.1 Absolute Maximum Ratings 87
13.7.2 A/D Electrical Characteristics 87

1.0 GENERAL DESCRIPTION

1.1 OVERVIEW

The System Energy Manager is a highly integrated microcontroller that provides several key features for systems including key scanning and control, battery and power management, as well as two 2–Wire serial I/O Ports. It incorporates the Dallas 8051–compatible high–speed microcontroller core which has been redesigned to eliminate wasted clock and memory cycles. Every standard 8051 instruction is executed between 1.5 and 3 times faster than the original for the same crystal speed. Looking at it another way, the high–speed core achieves the same throughput as a standard 8051 while using much less power as a result of fewer required clock cycles. As a result, the firmware can easily support many tasks required by mobile systems within a single component.

The controller is designed to off–load battery and power management tasks from the host CPU and thereby make possible an efficient solution for systems. In addition to the microcontroller core, it incorporates an 8–channel, 10–bit A/D converter with external reference so that its firmware can perform battery management tasks without burdening the host CPU. A four–channel 8–bit pulse–width modulator allows digital control of functions such as LCD contrast and brightness. An 8–bit port is provided for key scan inputs. A total of 88 parallel I/O pins are available for key scanning, system configuration, and power management control.

The System Energy Manager scans a key matrix and interfaces to the host CPU via an 8042–compatible port. The benefits of sophisticated power management and permanently powered functions are thereby attained without adding to the system's chip count.

Two 2–wire, bi–directional serial buses are incorporated to facilitate the management of slave peripheral devices on the motherboard, such as digital temperature sensors and potentiometers, and to support external low–speed I/O devices such as monitor configuration channels, pen tablets, and joysticks.

Because a direct interface to the X–bus is provided, the controller is not dependent on a particular core logic chip or chip set. Independent chip select inputs for the keyboard controller, power management #1, and power management #2 registers are provided.

CONTROLLER BLOCK DIAGRAM Figure 1–1

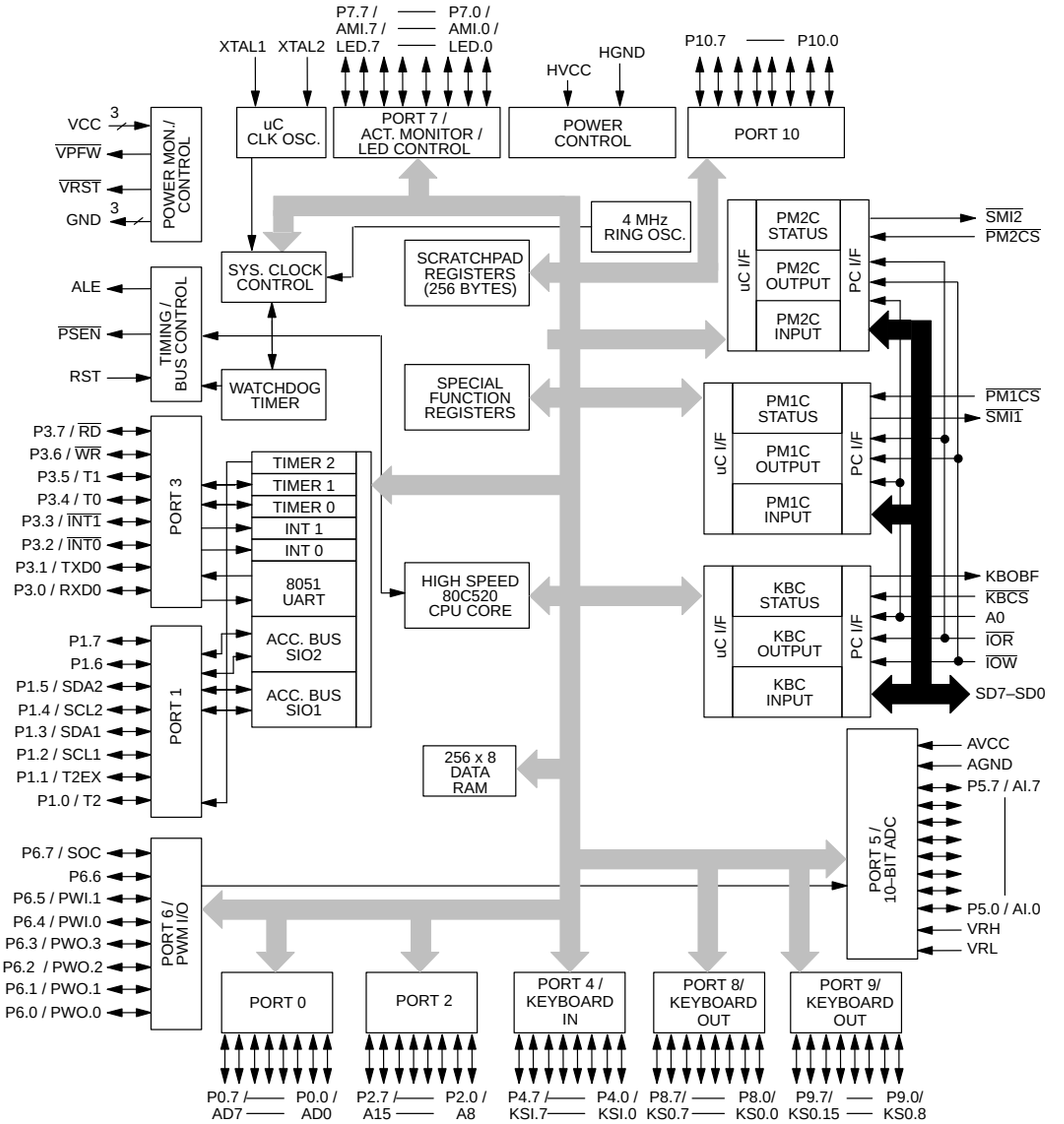

1.2 DETAILED FEATURE SUMMARY

- **High Speed 80C32 Compatible Core:**
  - High performance 4 clocks / machine cycle (8032 = 12)
  - Low Power: typically 1/3 power for equivalent 8032 throughput
  - Maximum clock speed up to 25 MHz at 5.0V
  - Ultra–low stop mode power (typ. 1 uA) and “IDLE” mode (typ. 10 mA)
  - Multiple wake–up sources from STOP including key scan, 2–wire, host I/F, or external interrupt
  - Three 16–bit timers, 1 serial port
  - 256 byte scratchpad
  - 256 bytes MOVX RAM
- **Keyboard Control:**
  - Replaces 8042 and key scan microcontroller
  - 2 Parallel I/O ports for key scan outputs
  - One interrupt–driven 8–bit input port to initiate key–scan sequence
- **Input/Output:**
  - Total of eleven 8–bit I/O ports; all pins can be individually programmed to serve as general purpose digital input/output.
  - Each 8–bit port supports one or more special functions:
    Port 0, 2, 3: External program / data memory interface
    Port 1, 3: UART, 2–Wire serial, timers, and external interrupt I/O.
    Port 4, 8, 9: Key scan input / output
    Port 5: A/D inputs
    Port 6: PWM Outputs
    Port 7: Activity monitor, LED Control
    Port 10: GPIO
- **Analog Input/Output:**
  - Eight–channel, 10–bit A/D with power down mode supports charging NiMH rechargeable cells
  - 4–channel, 8–bit PWM supports LCD brightness and contrast control
- **2–Wire Bi–directional Serial Buses**
  - Master/slave multi–drop operation
  - Manages on–board slaves or external I/O devices
- **Power Control**
  - Generates system power on reset
  - Programmable power down pin states

1.3 CONVENTIONS

The following conventions are used throughout this specification:

- “SEM” is the short form name used to indicate the System Energy Manager.
- Signals that are active low are followed by a pound symbol (#) or backslash (\), or are indicated with an overbar.
- If a range of signals is described, such as SA0 through SA10, the range is given as SA10–0, with the most–significant digit first and the least–significant digit last, separated by a hyphen.
- Numbers written in this specification can be written as decimal, hexadecimal, or binary. Hexadecimal numbers are followed by an “H” suffix. Binary numbers are followed by a “B” suffix. For example, decimal 27 = 1BH = 00011011B.

1.4 ADDITIONAL REFERENCES

The SEM incorporates the Dallas 8051 compatible High Speed Micro core including the CPU and many of its core peripherals. The operational details of these elements are contained in the Dallas High Speed Micro User’s Guide.

2.0 PIN DESCRIPTION

128–TQFP PIN ASSIGNMENT Figure 2–1

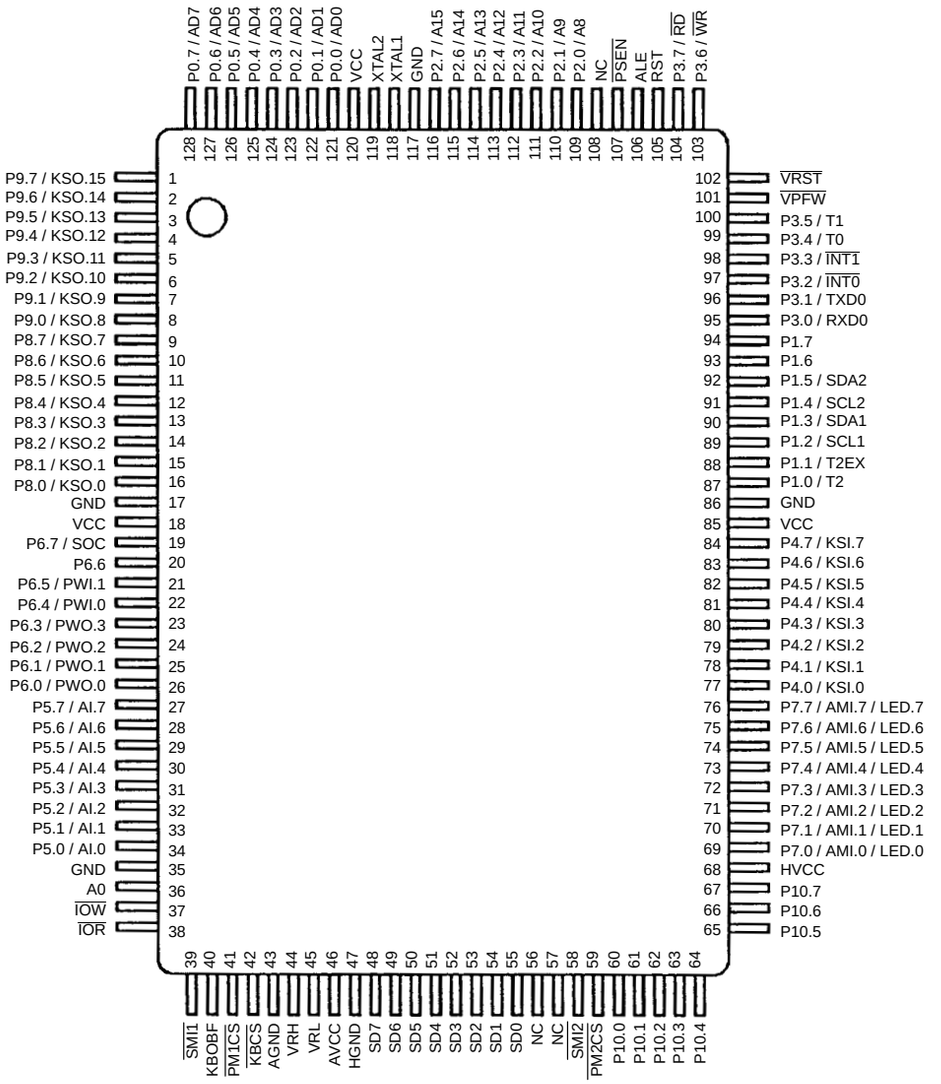

2.1 PIN FUNCTION SUMMARY

PIN	SYMBOL	DESCRIPTION
36	A0	**Command / Data Select:** Input. Address input used by the host processor in data transfers to the keyboard controller and power management #1 and #2 interface ports to indicate whether the transfer is command (A0=1) or data (A0=0).
43	AGND	**Analog Ground.**
106	ALE	**Address Latch Enable:** Output. This signal functions as a clock to latch the external address LSB from the multiplexed address/data bus on Port 0. This signal is commonly connected to the latch enable of an external 373 family transparent latch. ALE has a pulse width of 1.5 XTAL1 cycles and a period of 4 XTAL1 cycles. ALE is forced high when the SEM is in a Reset condition.
46	AVCC	**Analog VCC.**
17 35 86 117	GND	**Digital circuit ground.**
47	HGND	**Host Interface Ground:**
68	HVCC	**Host Interface VCC:**
38	$\overline{\text{IOR}}$	**I/O Read:** Input. I/O Read is used to signal a read operation is in effect on the host address/data bus.
37	$\overline{\text{IOW}}$	**I/O Write:** Input. I/O Write is used to signal a write operation is in effect on the host address/data bus.
42	$\overline{\text{KBCS}}$	**Keyboard Chip Select:** (Input, active low). This is a chip select signal used to enable the keyboard control host interface port.
40	KBOBF	**Keyboard Output Buffer Full:** (Output, active high). This signal is set when the keyboard control host interface data buffer contains data to be read by the host. KBOBF will be driven low when host reads the keyboard control data buffer register.
56 57 108	NC	**No Connection.**
121 122 123 124 125 126 127 128	P0.0 (AD0) P0.1 (AD1) P0.2 (AD2) P0.3 (AD3) P0.4 (AD4) P0.5 (AD5) P0.6 (AD6) P0.7 (AD7)	**Port 0 / Address/Data Outputs 7–0:** I/O. Port 0 is an open–drain 8–bit bi–directional I/O port. As an alternate function Port 0 can function as the multiplexed address/data bus to access off–chip memory. During the time when ALE is high, the LSB of a memory address is presented. When ALE falls to a logic 0, the port transitions to a bi–directional data bus. This bus is used to read external ROM and read/write external RAM memory or peripherals. When used as a memory bus, the port provides active high drivers. The reset condition of Port 0 is tri–state. Pull–up resistors are required when using Port 0 as an I/O port.

PIN	SYMBOL	DESCRIPTION
87 88 89 90 91 92 93 94	P1.0 (T2) P1.1 (T2EX) P1.2 SCL1 P1.3 SDA1 P1.4 SCL2 P1.5 SDA2 P1.6 P1.7	**Port 1/ (Alternate Functions):** – I/O. Port 1 provides eight lines which can be individually selected as bi–directional I/O port pins or as the alternate functions listed below: **Port** / **Alternate Function** / **Description** P1.0 / T2 / External I/O for Timer/Counter 2 P1.1 / T2EX / Timer/Counter 2 Capture/Reload Trigger P1.2 / SCL1 / 2–Wire Serial Clock 1 P1.3 / SDA1 / 2–Wire Serial Data 1 P1.4 / SCL2 / 2–Wire Serial Clock 2 P1.5 / SDA2 / 2–Wire Serial Data 2 P1.6 / (None) P1.7 / (None) Note that P1.7 – P1.2 are high–drive pins which are always open–drain and must be used with external pull–ups when used as I/O port pins. P1.1 and P1.0 have internal pull–up resistors.
109 110 111 112 113 114 115 116	P2.0 (A8) P2.1 (A9) P2.2 (A10) P2.3 (A11) P2.4 (A12) P2.5 (A13) P2.6 (A14) P2.7 (A15)	**Port 2 / Address Outputs A15–8:** – I/O. Port 2 is a pseudo–bi–directional I/O port with internal pull–up resistors. As an alternate function Port 2 can function as MSB of the external address bus.
95 96 97 98 99 100 103 104	P3.0(RXD0) P3.1 (TXD0) P3.2 ($\overline{\text{INT0}}$) P3.3 ($\overline{\text{INT1}}$) P3.4 (T0) P3.5 (T1) P3.6 ($\overline{\text{WR}}$) P3.7 ($\overline{\text{RD}}$)	**Port 3 / (Alternate Functions):** – I/O. Port 3 provides eight lines each of which can serve as psuedo–bi–directional I/O port pins or as the alternate functions as listed below. Internal pull–up resistors are always present on these pins. **Port** / **Alternate Function** / **Description** P3.0 / RXD0 / Serial Port 0 Input P3.1 / TXD0 / Serial Port 0 Output P3.2 / $\overline{\text{INT0}}$ / External Interrupt 0 P3.3 / $\overline{\text{INT1}}$ / External Interrupt 1 P3.4 / T0 / Timer 0 External Input P3.5 / T1 / Timer 1 External Input P3.6 / $\overline{\text{WR}}$ / External Data Memory Write Strobe P3.7 / $\overline{\text{RD}}$ / External Data Memory Read Strobe
77 78 79 80 81 82 83 84	P4.0 (KSI.0) P4.1 (KSI.1) P4.2 (KSI.2) P4.3 (KSI.3) P4.4 (KSI.4) P4.5 (KSI.5) P4.6 (KSI.6) P4.7 (KSI.7)	**Port 4 / KSI.7–0:** – I/O / Keyboard Scan Inputs. Port 4 provides eight lines which can be individually selected as psuedo–bi–directional I/O port pins or as an interrupt Inputs for key scanning. Port 4 pins incorporate Schmitt inputs with pull–up resistors.

PIN	SYMBOL	DESCRIPTION
34 33 32 31 30 29 28 27	P5.0 (AI.0) P5.1 (AI.1) P5.2 (AI.2) P5.3 (AI.3) P5.4 (AI.4) P5.5 (AI.5) P5.6 (AI.6) P5.7 (AI.7)	**Port 5 / AI.7–0:** – I/O / A/D inputs. Port 5 provides eight lines which can be individually selected as open–drain psuedo–bi–directional I/O port pins or as A/D inputs. Pull–up resistors are required when using Port 5 as an I/O port.
26 25 24 23 22 21 20 19	P6.0 (PWO.0) P6.1 (PWO.1) P6.2 (PWO.2) P6.3 (PWO.3) P6.4 (PWI.0) P6.5 (PWI.1) P6.6 P6.7 / SOC	**Port 6 / PW0.3 – 0:** – I/O / Pulse–Width Modulated Outputs. Port 6 provides eight lines which can all serve as psuedo–bi–directional I/O port pins with internal pull–up resistors. Six lines can be individually selected to serve the pulse–width modulator function indicated below: **Port** — **Alternate Function** — **Description** P6.0 — PWO.0 — PWM 0 output (active high drive when enabled) P6.1 — PWO.1 — PWM 1 output (active high drive when enabled) P6.2 — PWO.2 — PWM 2 output (active high drive when enabled) P6.3 — PWO.3 — PWM 3 output (active high drive when enabled) P6.4 — PWI.0 — Optional clock input for PWM channels 0 and 2 P6.5 — PWI.1 — Optional clock input for PWM channels 1 and 3 P6.6 — (none) P6.7 — SOC — External A / D start of conversion signal
69 70 71 72 73 74 75 76	P7.0 (AMI.0) (LED.0) P7.1 (AMI.1) (LED.1) P7.2 (AMI.2) (LED.2) P7.3 (AMI.3) (LED.3) P7.4 (AMI.4) (LED.4) P7.5 (AMI.5) (LED.5) P7.6 (AMI.6) (LED.6) P7.7 (AMI.7) (LED.7)	**Port 7 / AMI.7–0 / LED.7–0:** – I/O / Activity Monitor Inputs / LED Control. Port 7 provides eight lines which can serve as a psuedo–bi–directional I/O port pins with internal pull–ups or as Activity Monitor inputs. When used as Activity Monitor inputs, these pins are typically connected to the chip select line of an external peripheral device, and can be programmed to sense active–high or active–low signals. Any pin which is programmed as an Activity Monitor input by setting its AMEn bit to a 1 will have its pull–up device disabled and thereby function as an open–drain pin in order to eliminate unnecessary current drain. All port 7 pins are capable of controlling LED's.
16 15 14 13 12 11 10 9	P8.0 (KSO.0) P8.1 (KSO.1) P8.2 (KSO.2) P8.3 (KSO.3) P8.4 (KSO.4) P8.5 (KSO.5) P8.6 (KSO.6) P8.7 (KSO.7)	**Port 8 / KSO.7–0:**– I/O. Port 8 provides eight lines of open–drain psuedo–bi–directional I/O port pins. Typically, these lines are used for key–scan outputs.

PIN	SYMBOL	DESCRIPTION
8 7 6 5 4 3 2 1	P9.0 (KSO.8) P9.1 (KSO.9) P9.2 (KSO.10) P9.3 (KSO.11) P9.4 (KSO.12) P9.5 (KSO.13) P9.6 (KSO.14) P9.7 (KSO.15)	**Port 9 / KSO.15–8:** – I/O. Port 9 provides eight lines of open–drain psuedo–bi–directional I/O port pins. Typically, these lines are used for key–scan outputs.
60 61 62 63 64 65 66 67	P10.0 P10.1 P10.2 P10.3 P10.4 P10.5 P10.6 P10.7	**Port10:** –I/O. Port 10 provides eight lines of general purpose Input or Output.
41	$\overline{PM1CS}$	**Power Management #1 Chip Select:** (Input, active low). This is a chip select signal used to enable the power management #1 host interface port.
59	$\overline{PM2CS}$	**Power Management #2 Chip Select:** (Input, active low). This is a chip select signal used to enable the power management #2 host interface port.
107	$\overline{PSEN}$	**Program Store Enable:** Output. This signal goes low when off–chip program memory is being accessed via Ports 0 and 2. It is commonly connected to optional external ROM memory as a chip enable. $\overline{PSEN}$ will provide an active low pulse and is driven high when external ROM is not being accessed.
105	RST	**Reset:** Input, active high The RST input pin contains a Schmitt voltage input to recognize external active high Reset inputs. The pin also employs an internal pull–down resistor to allow for a combination of wired OR external Reset sources. An RC is not required for power–up, as the controller provides this function internally.
55 54 53 52 51 50 49 48	SD0 SD1 SD2 SD3 SD4 SD5 SD6 SD7	**System Data Bus:** (Bi–directional). SD7–0 are data bus lines used for data transfers between the host processor and the keyboard interface buffer and power management #1 and #2 interface buffers.
39	$\overline{SMI1}$	**System Management Interrupt #1:** (Output, active low). This signal is driven low when the power management #1 host interface data buffer contains data to be read by the host. $\overline{SMI1}$ will be returned to a High Level when host reads the power management #1 data buffer register.
58	$\overline{SMI2}$	**System Management Interrupt #2:** (Output, active low). This signal is driven low when the power management #2, host interface data buffer contains data to be read by the host. $\overline{SMI2}$ will be returned to a high level when the host reads the power management #2 data buffer register.

PIN	SYMBOL	DESCRIPTION
18 85 120	VCC	**Digital Power Supply Input:** For microcontroller and associated functions.
101	$\overline{\text{VPFW}}$	**Power Fail Warning:** Output, active low. The $\overline{\text{VPFW}}$ pin signals an impending power failure when VCC drops below VPFW voltage threshold.
44	VRH	**A/D Positive Voltage Reference:** The VRH pin is the positive reference (upper voltage limit) of the A/D Converter.
45	VRL	**A/D Negative Voltage Reference:** The VRL pin is the negative reference (lower voltage limit) of the A/D Converter.
102	$\overline{\text{VRST}}$	**Power Fail Reset:** Output, active low. The $\overline{\text{VRST}}$ pin signals a "power not good" condition to the system when system VCC has dropped below the VRST voltage threshold.
118 119	XTAL1 XTAL2	**µC Crystal Oscillator Inputs.** XTAL1 and XTAL2 provide support for parallel resonant, AT cut crystals. XTAL1 acts also as an input if there is an external clock source in place of a crystal. XTAL2 serves as the output of the crystal amplifier.

2.2 PIN CHARACTERISTICS

PIN	NAME	POWER DOWN MODE STATE	I/O BUFFER TYPE	RESET STATE
36	A0	–	I	–
43	AGND	–	–	–
106	ALE	Low	O	Low
46	AVCC	–	–	–
17	GND	–	–	–
35	GND	–	–	–
86	GND	–	–	–
117	GND	–	–	–
47	HGND	–	–	–
68	HVCC	–	–	–
38	$\overline{IOR}$	–	I	–
37	$\overline{IOW}$	–	I	–
42	$\overline{KBCS}$	–	I	–
40	KBOBF	Hold	O	Low
57	NC	–	–	–
56	NC	–	–	–
108	NC	–	–	–
121	P0.0 / AD0	High–Z	Open–Drain (port) CMOS drive (bus)	High–Z
122	P0.1 / AD1	High–Z	Open–Drain (port) CMOS drive (bus)	High–Z
123	P0.2 / AD2	High–Z	Open–Drain (port) CMOS drive (bus)	High–Z
124	P0.3 / AD3	High–Z	Open–Drain (port) CMOS drive (bus)	High–Z
125	P0.4 / AD4	High–Z	Open–Drain (port) CMOS drive (bus)	High–Z
126	P0.5 / AD5	High–Z	Open–Drain (port) CMOS drive (bus)	High–Z
127	P0.6 / AD6	High–Z	Open–Drain (port) CMOS drive (bus)	High–Z
128	P0.7 / AD7	High–Z	Open–Drain (port) CMOS drive (bus)	High–Z
87	P1.0 / T2	Hold	Pull–up	Weak High
88	P1.1 / T2EX	Hold	Pull–up	Weak High
89	P1.2 / SCL1	Hold	Open–drain	High–Z
90	P1.3 / SDA1	Hold	Open–drain	High–Z

2.2 PIN CHARACTERISTICS (cont'd)

PIN	NAME	POWER DOWN MODE STATE	I/O BUFFER TYPE	RESET STATE
91	P1.4 /SCL2	Hold	Open–drain	High–Z
92	P1.5 /SDA2	Hold	Open–drain	High–Z
93	P1.6	Hold	Open–drain	High–Z
94	P1.7	Hold	Open–drain	High–Z
109	P2.0 / A8	Hold	Pull–up	Weak High
110	P2.1 / A9	Hold	Pull–up	Weak High
111	P2.2 / A10	Hold	Pull–up	Weak High
112	P2.3 / A11	Hold	Pull–up	Weak High
113	P2.4 / A12	Hold	Pull–up	Weak High
114	P2.5 / A13	Hold	Pull–up	Weak High
115	P2.6 / A14	Hold	Pull–up	Weak High
116	P2.7 / A15	Hold	Pull–up	Weak High
95	P3.0 / RXD0	Hold	Pull–up	Weak High
96	P3.1 / TXD0	Hold	Pull–up	Weak High
97	P3.2 / $\overline{\text{INT0}}$	Hold	Pull–up	Weak High
98	P3.3 / $\overline{\text{INT1}}$	Hold	Pull–up	Weak High
99	P3.4 / T0	Hold	Pull–up	Weak High
100	P3.5 / T1	Hold	Pull–up	Weak High
103	P3.6 / $\overline{\text{WR}}$	Hold	Pull–up	Weak High
104	P3.7 / $\overline{\text{RD}}$	Hold	Pull–up	Weak High
77	P4.0 / KSI.0	Hold	Pull–up	Weak High
78	P4.1 / KSI.1	Hold	Pull–up	Weak High
79	P4.2 / KSI.2	Hold	Pull–up	Weak High
80	P4.3 / KSI.3	Hold	Pull–up	Weak High
81	P4.4 / KSI.4	Hold	Pull–up	Weak High
82	P4.5 / KSI.5	Hold	Pull–up	Weak High
83	P4.6 / KSI.6	Hold	Pull–up	Weak High
84	P4.7 / KSI.7	Hold	Pull–up	Weak High
34	P5.0 / AI.0	Hold	Open–drain	High–Z
33	P5.1 / AI.1	Hold	Open–drain	High–Z
32	P5.2 / AI.2	Hold	Open–drain	High–Z
31	P5.3 / AI.3	Hold	Open–drain	High–Z

2.2 PIN CHARACTERISTICS (cont'd)

PIN	NAME	POWER DOWN MODE STATE	I/O BUFFER TYPE	RESET STATE
30	P5.4 / AI.4	Hold	Open–drain	High–Z
29	P5.5 / AI.5	Hold	Open–drain	High–Z
28	P5.6 / AI.6	Hold	Open–drain	High–Z
27	P5.7 / AI.7	Hold	Open–drain	High–Z
26	P6.0 / PWO.0	Hold	Pull–up (PWMn disabled) CMOS drive (PWMn enabled)	Weak High
25	P6.1 / PWO.1	Hold	Pull–up (PWMn disabled) CMOS drive (PWMn enabled)	Weak High
24	P6.2 / PWO.2	Hold	Pull–up (PWMn disabled) CMOS drive (PWMn enabled)	Weak High
23	P6.3 / PWO.3	Hold	Pull–up (PWMn disabled) CMOS drive (PWMn enabled)	Weak High
22	P6.4 / PWI.0	Hold	Pull–up	Weak High
21	P6.5 / PWI.1	Hold	Pull–up	Weak High
20	P6.6	Hold	Pull–up	Weak High
19	P6.7 / SOC	Hold	Pull–up	Weak High
69	P7.0 / AMI.0 / LED.0	Hold	Pull–up	Weak High
70	P7.1 / AMI.1 / LED.1	Hold	Pull–up	Weak High
71	P7.2 / AMI.2 / LED.2	Hold	Pull–up	Weak High
72	P7.3 / AMI.3 / LED.3	Hold	Pull–up	Weak High
73	P7.4 / AMI.4/ LED.4	Hold	Pull–up	Weak High
74	P7.5 / AMI.5/ LED.5	Hold	Pull–up	Weak High
75	P7.6 / AMI.6/ LED.6	Hold	Pull–up	Weak High
76	P7.7 / AMI.7/ LED.7	Hold	Pull–up	Weak High
16	P8.0 / KSO.0	Hold	Open–drain	High–Z
15	P8.1 / KSO.1	Hold	Open–drain	High–Z
14	P8.2 / KSO.2	Hold	Open–drain	High–Z
13	P8.3 / KSO.3	Hold	Open–drain	High–Z
12	P8.4 / KSO.4	Hold	Open–drain	High–Z
11	P8.5 / KSO.5	Hold	Open–drain	High–Z
10	P8.6 / KSO.6	Hold	Open–drain	High–Z

2.2 PIN CHARACTERISTICS (cont'd)

PIN	NAME	POWER DOWN MODE STATE	I/O BUFFER TYPE	RESET STATE
9	P8.7 / KSO.7	Hold	Open–drain	High–Z
8	P9.0 / KSO.8	Hold	Open–drain	High–Z
7	P9.1 / KSO.9	Hold	Open–drain	High–Z
6	P9.2 / KSO.10	Hold	Open–drain	High–Z
5	P9.3 / KSO.11	Hold	Open–drain	High–Z
4	P9.4 / KSO.12	Hold	Open–drain	High–Z
3	P9.5 / KSO.13	Hold	Open–drain	High–Z
2	P9.6 / KSO.14	Hold	Open–drain	High–Z
1	P9.7 / KSO.15	Hold	Open–drain	High–Z
60	P10.0	Hold	Pull–up	Weak High
61	P10.1	Hold	Pull–up	Weak High
62	P10.2	Hold	Pull–up	Weak High
63	P10.3	Hold	Pull–up	Weak High
64	P10.4	Hold	Pull–up	Weak High
65	P10.5	Hold	Pull–up	Weak High
66	P10.6	Hold	Pull–up	Weak High
67	P10.7	Hold	Pull–up	Weak High
41	$\overline{PM1CS}$	–	I	–
59	$\overline{PM2CS}$	–	I	–
107	$\overline{PSEN}$	Low	O	Low
105	RST	–	I	–
55	SD0	(note 2)	Bi–directional	(note 2)
54	SD1	(note 2)	Bi–directional	(note 2)
53	SD2	(note 2)	Bi–directional	(note 2)
52	SD3	(note 2)	Bi–directional	(note 2)
51	SD4	(note 2)	Bi–directional	(note 2)
50	SD5	(note 2)	Bi–directional	(note 2)
49	SD6	(note 2)	Bi–directional	(note 2)
48	SD7	(note 2)	Bi–directional	(note 2)
39	$\overline{SMI1}$	Hold	O	High
58	$\overline{SMI2}$	Hold	O	High
18	VCC	–	–	–
85	VCC	–	–	–
120	VCC	–	–	–

2.2 PIN CHARACTERISTICS (cont'd)

PIN	NAME	POWER DOWN MODE STATE	I/O BUFFER TYPE	RESET STATE
101	$\overline{\text{VPFW}}$	(note 3)	O	(note 3)
44	VRH	–	–	–
45	VRL	–	–	–
102	$\overline{\text{VRST}}$	(note 3)	O	(note 3)
118	XTAL1	–	I	–
119	XTAL2	H	O	–

PIN STATE DESCRIPTIONS

High–Z	High Impedance
Enabled	Power applied; electrically functioning input
Unchanged	Previous state not affected

NOTES:

1. As shown above, the original port pins P1.7–P1.2 have been modified to open–drain instead of having "Internal" pull–up resistors.
2. This signal is independently powered from the HVCC on pin 68. As a result, the state of the reset pin and the power down mode have no effect on its operation.
3. $\overline{\text{VRST}}$ and $\overline{\text{VPFW}}$ reflects the state of VCC with respect to the power–fail reset and power–fail warning trip points, respectively, and is unaffected by the RST pin and power down mode state.

3.0 CORE MICROCONTROLLER

3.1 CORE MICRO OVERVIEW

The SEM incorporates the Dallas High Speed Micro core which is a fully static CMOS 8051 compatible microcontroller with a new internal architecture designed for high performance. The higher speed operation of the microcontroller core comes not just from increasing the clock frequency, but from a newer, more efficient design of the internal architecture. The major features of the High Speed Micro Core include:

- 4 clocks/machine cycle (8032 = 12)
- Wasted cycles removed
- Runs DC to 25 Mhz clock rates @ 5V
- Single–cycle instruction in 160 ns
- Uses less power for equivalent work
- Dual data pointer
- Optional variable length MOVX to access fast/slow RAM /peripherals

3.2 INSTRUCTION SET SUMMARY

All instructions in the SEM perform the same functions as their 80C32 counterparts. Their affect on bits, flags, and other status functions are identical. However, the timing of each instruction is different. This applies both in absolute and relative number of clocks.

For absolute timing of real–time events, the timing of software loops will need to be calculated using the table below. However, counter/timers default to run at the older 12 clocks per increment. Therefore, while software runs at higher speed, timer–based events need no modification to operate as before. Timers can be set to run at 4 clocks per increment cycle to take advantage of higher speed operation.

The relative time of two instructions might be different in the new architecture than it was previously. For example, in the original architecture, the “MOVX A, @ DPTR” instruction and the “MOV direct, direct” instruction used two machine cycles or 24 oscillator cycles. Therefore, they required the same amount of time. In the GEM, the MOVX instruction can be done in two machine cycles or 8 oscillator cycles but the “MOV direct, direct” uses three machine cycles or 12 oscillator cycles. While both are faster than their original counterparts, they now have different execution times from each other. This is because in most cases, the SEM uses one cycle for each byte. The timing of each instruction should be examined for familiarity with the changes. Note that a machine cycle now requires just four clocks, and provides one ALE pulse per cycle. Many instructions require only one cycle, but some require five. In the original architecture, all were one or two cycles except for MUL and DIV.

INSTRUCTION SET SUMMARY Table 3–1

Legends:

A	–	Accumulator
Rn	–	Register R7–R0
direct	–	Internal Register address
@Ri	–	Internal Register pointed–to by R0 or R1 (except MOVX)
rel	–	2’s complement offset byte
bit	–	direct bit–address
#data	–	8–bit constant
#data 16	–	16–bit constant
addr 16	–	16–bit destination address
addr 11	–	11–bit destination address

INSTRUCTION SET SUMMARY Table 3–1 (cont'd)

INSTRUCTION	BYTE	OSCILLATOR CYCLES	INSTRUCTION	BYTE	OSCILLATOR CYCLES
Arithmetic Instructions:					
ADD A, Rn	1	4	INC A	1	4
ADD A, direct	2	8	INC Rn	1	4
ADD A, @Ri	1	4	INC direct	2	8
ADD A, #data	2	8	INC @Ri	1	4
ADDC A, Rn	1	4	INC DPTR	1	12
ADDC A, direct	2	8	DEC A	1	4
ADDC A, @Ri	1	4	DEC Rn	1	4
ADDC A, #data	2	8	DEC direct	2	8
SUBB A, Rn	1	4	DEC @Ri	1	4
SUBB A, direct	2	8	MUL AB	1	20
SUBB A, @Ri	1	4	DIV AB	1	20
SUBB A, #data	2	8	DA A	1	4
Logical Instructions:					
ANL A, Rn	1	4	XRL A, Rn	1	4
ANL A, direct	2	8	XRL A, direct	2	8
ANL A, @Ri	1	4	XRL A, @Ri	1	4
ANL A, #data	2	8	XRL A, #data	2	8
ANL direct, A	2	8	XRL direct, A	2	8
ANL direct, #data	3	12	XRL direct, #data	3	12
ORL A, Rn	1	4	CLR A	1	4
ORL A, direct	2	8	CPL A	1	4
ORL A, @Ri	1	4	RL A	1	4
ORL A, #data	2	8	RLC A	1	4
ORL direct, A	2	8	RR A	1	4
ORL direct, #data	3	12	RRC A	1	4
			SWAP A	1	4
Data Transfer Instructions:					
MOV A, Rn	1	4	MOVC A, @A+DPTR	1	12
MOV A, direct	2	8	MOVC A, @A+PC	1	12
MOV A, @Ri	1	4	MOVX A, @Ri	1	8–36
MOV A, #data	2	8	MOVX A, @DPTR	1	8–36
MOV Rn, A	1	4	MOVX @Ri, A	1	8–36
MOV Rn, direct	2	8	MOVX @DPTR, A	1	8–36
MOV Rn, #data	2	8	PUSH direct	2	8
MOV direct, A	2	8	POP direct	2	8
MOV direct, Rn	2	8	XCH A, Rn	1	4
MOV direct1, direct2	3	12	XCH A, direct	2	8
MOV direct, @Ri	2	8	XCH A, @Ri	1	4
MOV direct, #data	3	12	XCHD A, @Ri	1	4
MOV @Ri, A	1	4			
MOV @Ri, direct	2	8			
MOV @Ri, #data	2	8			
MOV DPTR, #data 16	3	12			

INSTRUCTION SET SUMMARY Table 3–1 (cont'd)

Bit Manipulation Instructions:					
CLR C	1	4	ANL C, bit	2	8
CLR bit	2	8	ANL C, $\overline{\text{bit}}$	2	8
SETB C	1	4	ORL C, bit	2	8
SETB bit	2	8	ORL C, $\overline{\text{bit}}$	2	8
CPL C	1	4	MOV C, bit	2	8
CPL bit	2	8	MOV bit, C	2	8
Program Branching Instructions:					
ACALL addr 11	2	12	CJNE A, direct, rel	3	16
LCALL addr 16	3	16	CJNE A, #data, rel	3	16
RET	1	16	CJNE Rn, #data, rel	3	16
RETI	1	16	CJNE @ Ri, #data, rel	3	16
AJMP addr 11	2	12	NOP	1	4
LJMP addr 16	3	16	JC rel	2	12
SJMP rel	2	12	JNC rel	2	12
JMP @A+DPTR	1	12	JB bit, rel	3	16
JZ rel	2	12	JNB bit, rel	3	16
JNZ rel	2	12	JBC bit, rel	3	16
DJNZ Rn, rel	2	12			
DJNZ direct, rel	3	16			

The Table above shows the speed for each class of instruction. Note that many of the instructions have multiple opcodes. There are 255 opcodes for 111 instructions. Of the 255 opcodes, 159 are three times faster than the original 80C32. While a system than emphasizes those instructions will see the most improvement, the large total number that receive a three to one improvement assure a dramatic speed increase for any system. The speed improvement summary is provided below.

3.3 SPEED IMPROVEMENT

The following table summarizes the speed improvement of the High Speed Micro core over a standard 12 clock / machine cycle 8052 device.

#Opcodes		Speed Improvement
159		3.0 x
51		1.5 x
43		2.0 x
2		2.4 x
255	Average:	2.5

3.4 INSTRUCTION SET ADDITIONAL REFERENCES

The user should refer to the Dallas High Speed Micro User's Guide for a complete description of the instruction set including its address modes, coding, and timing for the SEM.

3.5 RESET

The High–Speed Micro has three ways of entering a reset state:

- Power–On / Fail Reset
- Watchdog Timer Reset
- External Reset

The operation of the CPU timing and states during a reset are documented in the Dallas High Speed Micro User's Guide under the "Reset Conditions" section. The Watchdog Timer reset is documented in the Watchdog Timer section of the Dallas High Speed Micro User's Guide. The operation of the Power–On / Fail reset is described in the Power Management section of this document.

3.6 INTERRUPT CONTROL

The SEM provides 16 sources of interrupt with three priority levels. The Power–fail Interrupt (PFI), if enabled, always has the highest priority. There are two remaining user selectable priorities: high and low. If two interrupts that have the same priority occur simultaneously, the hardware–determined precedence given below determines which is a acted upon. Except for the PFI, all interrupts that are new to the 8051 family have a lower natural priority than the originals.

INTERRUPT PRIORITY Table 3–2

NAME	DESCRIPTION	VECTOR	NATURAL PRIORITY	8051/DALLAS
PFI	Power Fail Interrupt	33h	1	DALLAS
INT0	External Interrupt 0	03h	2	8051
TF0	Timer 0	0Bh	3	8051
INT1	External Interrupt 1	13h	4	8051
TF1	Timer 1	1Bh	5	8051
SCON0	TI0 or RI0 from Serial Port 0	23h	6	8051
TF2	Timer 2	2Bh	7	8051
AMI	Activity Monitor Interrupt	3Bh	8	DALLAS
2WI1	2–Wire Serial Port 1	43h	9	DALLAS
ADI	A/D End of Conversion	4Bh	10	DALLAS
2WI2	2–Wire Serial Port 2	53h	11	DALLAS
KBI	Keyboard Buffer Input	5Bh	12	DALLAS
PBI1	Power Mgmt. Buffer Input #1	63h	13	DALLAS
KDI	Key Detect Input	6Bh	14	DALLAS
WDI	WatchDog Periodic Interrupt	73h	15	DALLAS
PBI2	Power Mgmt. Buffer Input #2	7Bh	16	DALLAS

INTERRUPT CONTROL SUMMARY Table 3–3

INTERRUPT SOURCE	FLAG(S)	FLAG LOC.	ENABLE	ENABLE LOC.	PRIORITY	PRIORITY LOC.
Power Fail	PFI	WDCON.4	EPFI	WDCON.5	N/A	N/A
External 0	IE0	TCON.1	EX0	IE.0	PX0	IP.0
Timer 0	TF0	TCON.5	ET0	IE.1	PT0	IP.1
External 1	IE1	TCON.3	EX1	IE.2	PX1	IP.2
Timer 1	TF1	TCON.7	ET1	IE.3	PT1	IP.3
Serial Port 0	RI0,TI0	SCON0.0/ SCON0.1	ES0	IE.4	PS0	IP.4
Timer 2	TF2	T2CON.7	ET2	IE.5	PT2	IP.5
Activity monitor	AMF7–0	AMF.7–0	EAM	IE.6	PAM	IP.6

INTERRUPT CONTROL SUMMARY Table 3–3 (cont'd)

INTERRUPT SOURCE	FLAG(S)	FLAG LOC.	ENABLE	ENABLE LOC.	PRIORITY	PRIORITY LOC.
2–Wire Serial Port 1	2WIF1	2WCON1.4	E2W1	EIE.0	P2W1	EIP.0
A/D End of Conv.	EOC	ADCON1.6	EAD	EIE.1	PAD	EIP.1
2–Wire Serial Port 2	2WIF2	2WCON2.4	E2W2	EIE.2	P2W2	EIP.2
Keyboard Buffer	KIBF	KBSTAT.1	EKB	EIE.3	PKB	EIP.3
Power Mgmt. #1 Buffer	PIBF1	PMSTAT1.1	EPB1	EIE.4	PPB1	EIP.4
Key Detect Input	KDF7–0	KDF.7–0	EKD	EIE.5	PKD	EIP.5
WatchDog periodic	WDIF	WDCON.3	EWDI	EIE.6	PWDI	EIP.6
Power Mgmt. #2 Buffer	PIBF2	PMSTAT2.1	EPB2	EIE.7	PPB2	EIP.7

A complete description of the interrupt structure of the microcontroller core including operation of the priority scheme and acknowledgment operation is contained in the Dallas High Speed Micro User's Guide.

4.0 MEMORY RESOURCES

4.1 OVERVIEW

The SEM contains the following memory resources and features:

- 256 bytes of on–chip direct (scratchpad) RAM
- 256 bytes of on–chip MOVX data RAM
- Off–chip program and data memory expansion
- Software enable/disable of on–chip data memory

4.2 DATA MEMORY ACCESS

Unlike many 8051 derivatives, the SEM contains on–chip data memory. Although physically on–chip, software accesses this area in the same way off–chip data memory is accessed: via the MOVX instruction. The 256 bytes of SRAM is located between address 0000h and 00FFh.

Access to the on–chip data RAM is optional under software control. When enabled by software, the data SRAM is between 0000h and 00FFh. Any MOVX instruction that uses this area will go to the on–chip RAM while enabled. MOVX addresses greater than 256 automatically go to external memory through Ports 0 & 2.

When disabled, the 256 bytes of memory area is transparent to the system memory map. Any MOVX directed to the space between 0000h and FFFFh goes to the expanded bus on Ports 0 & 2. This also is the default condition. This default allows the SEM to drop into an existing system that uses these addresses for other hardware and still have full compatibility.

The on–chip data area is selected by software using two bits in the Power Management Register at location C4h. This selection is dynamically programmable. Thus access to the on–chip area becomes transparent to reach off–chip devices at the same addresses. The control bits are DME1 (PMR.1) and DME0 (PMR.0). Their operation is described in Table 4–1.

DATA MEMORY ACCESS CONTROL Table 4–1

DME1	DME0	DATA MEMORY ADDRESS	MEMORY FUNCTION
0	0	0000h – FFFFh	External Data Memory (Default condition)
0	1	0000h – 00FFh 0100h – FFFFh	Internal SRAM Data Memory External Data Memory
1	0	Reserved	Reserved
1	1	0000h – 00FFh 0100h – FFFBh FFFCh FFFDh – FFFFh	Internal SRAM Data Memory Reserved – no external access Read access to the status of lock bits Reserved – no external access

Notes on the status byte read at FFFCh with DME1, 0 = 1, 1: Bits 2–0 reflect the programmed status of the security lock bits LB3–LB1. They are individually set to a logic 1 to correspond to a security lock bit that has been programmed. These status bits allow software to verify that the part has been locked before running if desired. The bits are read only.

4.2.1 Stretch Memory Cycle

The SEM allows software to adjust the speed of off–chip data memory access. The micro is capable of performing the MOVX in as little as two instruction cycles. The on–chip SRAM uses this speed and any MOVX instruction directed internally uses two cycles. However, the time can be stretched for interface to external devices. This allows access to both fast memory and slow memory or peripherals with no glue logic. Even in high–speed systems, it may not be necessary or desirable to perform off–chip data memory access at full speed. In addition, there are a variety of memory mapped peripherals such as LCDs or UARTs that are slow.

Operation of the Stretch MOVX function is fully documented in the Dallas High Speed Micro User's Guide.

4.2.2 Dual Data Pointer

A second data pointer register (DPTR 1) is incorporated into the SEM in addition to the standard one in the 8051. This feature allows faster execution of many operations involving data memory access, such as block moves.

Operation of the dual data pointer function is fully documented in the Dallas High Speed Micro User's Guide.

4.3 EXTERNAL MEMORY INTERFACE

Interface techniques for interfacing external memory as program or data storage to the SEM via Ports 0 and 2 are described in the Dallas High Speed Micro User's Guide.

4.4 DIRECT (SCRATCHPAD) RAM ACCESS

The SEM incorporates a full 256 bytes of direct RAM. This RAM is accessed in a manner identical to that of a standard 80C52 compatible device. A full description of this memory along with the instructions that access it is contained in the Dallas High Speed Micro User's Guide.

4.5 SPECIAL FUNCTION REGISTERS

Special Function Registers (SFRs) control most special features of the SEM. This allows the SEM to have many new features but use the same instruction set as the 8051. When writing software to use a new feature, an equate statement defines the SFR to an assembler or compiler. This is the only change needed to access the new function. The SEM duplicates the SFRs contained in the standard 80C52. Table 4–2 is a summary of the values loaded into the SEM's SFR's on reset. Table 4–3 is a summary of all of the SFR's and the control bits they contain.

SPECIAL FUNCTION REGISTER RESET VALUES Table 4–2
** New functions are in bold*

F8h	**EIP 00000000**								FFh
F0h	B 00000000				**PORT10 11111111**	**PMSTAT2 XXXXXX00**	**PMDIN2 XXXXXXXX**	**PMDOUT2 XXXXXXXX**	F7h
E8h	**EIE 00000000**				**PORT9 11111111**	**PW23CON 00000000**	**PWM2 00000000**	**PWM3 00000000**	EFh
E0h	ACC 00000000				**PORT8 11111111**	**PW23CS 00000000**	**PW2FG 00000000**	**PW3FG 00000000**	E7h
D8h	**WDCON 0X0X0XX0**	**2WCON2 00000000**	**2WSTAT12 00000000**	**2WSTAT22 00000000**		**PW01CON 00000000**	**PWM0 00000000**	**PWM1 00000000**	DFh
D0h	PSW 00000000	**2WSADR2 00000000**	**2WDAT2 00000000**	**2WFS2 00000000**	**PORT7 11111111**	**PW01CS 00000000**	**PW0FG 00000000**	**PW1FG 00000000**	D7h
C8h	T2CON 00000000	T2MOD 11111100	RCAP2L 00000000	RCAP2H 00000000	TL2 00000000	TH2 00000000			CFh
C0h					**PMR 010X0000**	**STATUS 00000000**		**TA 11111111**	C7h
B8h	IP 10000000	SADEN0 00000000			**PORT6 11111111**	**PMSTAT1 XXXXXX00**	**PMDIN1 XXXXXXXX**	**PMDOUT1 XXXXXXXX**	BFh
B0h	PORT3 11111111		**ADCON1 00000000**	**ADCON2 00000000**	**ADMSB 00000000**	**ADLSB 00000000**	**WINHI 00000000**	**WINLO 00000000**	B7h
A8h	IE 00000000	SADDR0 00000000			**PORT5 11111111**	**KBSTAT XXXXXX00**	**KBDIN XXXXXXXX**	**KBDOUT XXXXXXXX**	AFh
A0h	PORT2 11111111				**PORT4 11111111**	**KDE 00000000**	**KDF 00000000**		A7h
98h	SCON0 00000000	SBUF0 00000000	**2WSADR1 00000000**	**2WDAT1 00000000**	**2WFS1 00000000**	**2WCON1 00000000**	**2WSTAT11 00000000**	**2WSTAT21 00000000**	9Fh
90h	PORT1 11111111	**EXIF 0000XXX0**	**AME 00000000**	**AMQ 00000000**	**AMP 00000000**	**AMF 00000000**			97h
88h	TCON 00000000	TMOD 00000000	TL0 00000000	TL1 00000000	TH0 00000000	TH1 00000000	**CKCON 00000001**		8Fh
80h	PORT0 11111111	SP 00000111	DPL 00000000	DPH 00000000	**DPL1 00000000**	**DPH1 00000000**	**DPS 00000000**	PCON 00110000	87h

SPECIAL FUNCTION REGISTER LOCATIONS Table 4–3
** New functions are in bold*

REGISTER	BIT 7	BIT 6	BIT 5	BIT 4	BIT 3	BIT 2	BIT 1	BIT 0	ADDRESS
PORT0	P0.7	P0.6	P0.5	P0.4	P0.3	P0.2	P0.1	P0.0	80h
SP									81h
DPL									82h
DPH									83h
DPL1									84h
DPH1									85h
DPS	0	0	0	0	0	0	0	**SEL**	86h
PCON	SMOD	**SMOD0**	–	–	GF1	GF0	STOP	IDLE	87h
TCON	TF1	TR1	TF0	TR0	IE1	IT1	IE0	IT0	88h
TMOD	GATE	$\overline{C/T}$	M1	M0	GATE	$\overline{C/T}$	M1	M0	89h
TL0									8Ah
TL1									8Bh
TH0									8Ch
TH1									8Dh
CKCON	**WD1**	**WD0**	**T2M**	**T1M**	**T0M**	**MD2**	**MD1**	**MD0**	8Eh
PORT1	P1.7	P1.6	P1.5	P1.4	P1.3	P1.2	P1.1	P1.0	90h
EXIF	**–**	**–**	**–**	**–**	**XT/$\overline{RG}$**	**RGMD**	**RGSL**	**BGS**	91h
AME	**AME7**	**AME6**	**AME5**	**AME4**	**AME3**	**AME2**	**AME1**	**AME0**	92h
AMQ	**AMQ7**	**AMQ6**	**AMQ5**	**AMQ4**	**AMQ3**	**AMQ2**	**AMQ1**	**AMQ0**	93h
AMP	**AMP7**	**AMP6**	**AMP5**	**AMP4**	**AMP3**	**AMP2**	**AMP1**	**AMP0**	94h
AMF	**AMF7**	**AMF6**	**AMF5**	**AMF4**	**AMF3**	**AMF2**	**AMF1**	**AMF0**	95h
SCON0	SM0/FE	SM1	SM2	REN	TB8	RB8	TI0	RI0	98h
SBUF0	SB7	SB6	SB5	SB4	SB3	SB2	SB1	SB0	99h
2WSADR1	**SLA6**	**SLA5**	**SLA4**	**SLA3**	**SLA2**	**SLA1**	**SLA0**	–	9Ah
2WDAT1									9Bh
2WFS1									9Ch
2WCON1	**2WEN1**	**STA1**	**STO1**	**2WIF1**	**BMM1**	**ANAK1**	–	–	9Dh
2WSTAT11	**BER1**	**ARL1**	**RSTO1**	**TXI1**	**RXI1**	**TSTA1**	**RSTA1**	–	9Eh
2WSTAT21	**BB1**	**ADM1**	**X/$\overline{R1}$**	**ACKS1**	–	–	–	–	9Fh
PORT2	P2.7	P2.6	P2.5	P2.4	P2.3	P2.2	P2.1	P2.0	A0h
PORT4	**P4.7**	**P4.6**	**P4.5**	**P4.4**	**P4.3**	**P4.2**	**P4.1**	**P4.0**	A4h
KDE	**KDE7**	**KDE6**	**KDE5**	**KDE4**	**KDE3**	**KDE2**	**KDE1**	**KDE0**	A5h
KDF	**KDF7**	**KDF6**	**KDF5**	**KDF4**	**KDF3**	**KDF2**	**KDF1**	**KDF0**	A6h
IE	EA	**EAM**	ET2	ES0	ET1	EX1	ET0	EX0	A8h
SADDR0									A9h

SPECIAL FUNCTION REGISTER LOCATIONS Table 4–3 (cont'd)
** New functions are in bold*

REGISTER	BIT 7	BIT 6	BIT 5	BIT 4	BIT 3	BIT 2	BIT 1	BIT 0	ADDRESS
PORT5	**P5.7**	**P5.6**	**P5.5**	**P5.4**	**P5.3**	**P5.2**	**P5.1**	**P5.0**	ACh
KBSTAT	**KST7**	**KST6**	**KST5**	**KST4**	**KC/D**	**KST2**	**KIBF**	**KOBF**	ADh
KBDIN									AEh
KBDOUT									AFh
PORT3	P3.7	P3.6	P3.5	P3.4	P3.3	P3.2	P3.1	P3.0	B0h
ADCON1	**STRT/ BSY**	**EOC**	**CONT/ SS**	**ADEX**	**WCQ**	**WCM**	**ADON**	**WCIO**	B2h
ADCON2	**OUTCF**	**MUX2**	**MUX1**	**MUX0**	**APS3**	**APS2**	**APS1**	**APS0**	B3h
ADMSB	**ADC9/ 0**	**ADC8/ 0**	**ADC7/ 0**	**ADC6/ 0**	**ADC5/ 0**	**ADC4/ 0**	**ADC3/ ADC9**	**ADC2/ ADC8**	B4h
ADLSB	**ADC7**	**ADC6**	**ADC5**	**ADC4**	**ADC3**	**ADC2**	**ADC1**	**ADC0**	B5h
WINHI									B6h
WINLO									B7h
IP	–	**PAM**	PT2	PS0	PT1	PX1	PT0	PX0	B8h
SADEN0									B9h
PORT6	**P6.7**	**P6.6**	**P6.5**	**P6.4**	**P6.3**	**P6.2**	**P6.1**	**P6.0**	BCh
PMSTAT1	**P1ST7**	**P1ST6**	**P1ST5**	**P1ST4**	**PC/D1**	**P1ST2**	**PIBF1**	**POBF1**	BDh
PMDIN1									BEh
PMDOUT1									BFh
PMR	**CD1**	**CD0**	**SWB**	**–**	**XTOFF**	**ALE-OFF**	**DME1**	**DME0**	C4h
STATUS	**PIP**	**HIP**	**LIP**	**XTUP**	**–**	**–**	**SPTA0**	**SPRA0**	C5h
TA									C7h
T2CON	TF2	EXF2	RCLK	TCLK	EXEN2	TR2	$\overline{C/T2}$	CP/ RL2	C8h
T2MOD	–	–	–	–	–	–	T2OE	DCEN	C9h
RCAP2L									CAh
RCAP2H									CBh
TL2									CCh
TH2									CDh
PSW	CY	AC	F0	RS1	RS0	OV	FL	P	D0h
2WSADR2	**SLA6**	**SLA5**	**SLA4**	**SLA3**	**SLA2**	**SLA1**	**SLA0**	**–**	D1h
2WDAT2	**–**	**–**	**–**	**–**	**–**	**–**	**–**	**–**	D2h
2WFS2									D3h
PORT7	**P7.7**	**P7.6**	**P7.5**	**P7.4**	**P7.3**	**P7.2**	**P7.1**	**P7.0**	D4h

SPECIAL FUNCTION REGISTER LOCATIONS Table 4–3 (cont'd)
** New functions are in bold*

REGISTER	BIT 7	BIT 6	BIT 5	BIT 4	BIT 3	BIT 2	BIT 1	BIT 0	ADDRESS
PW01CS	**PW0S2**	**PW0S1**	**PW0S0**	**PW0EN**	**PW1S2**	**PW1S1**	**PW1S0**	**PW1EN**	D5h
PW0FG									D6h
PW1FG									D7h
WDCON	**SMOD**	**POR**	**EPFI**	**PFI**	**WDIF**	**WTRF**	**EWT**	**RWT**	D8h
2WCON2	**2WEN2**	**STA2**	**STO2**	**2WIF2**	**BMM2**	**ANAK2**	**–**	**–**	D9h
2WSTAT12	**BER2**	**ARL2**	**RSTO2**	**TXI2**	**RXI2**	**TSTA2**	**RSTA2**	**–**	DAh
2WSTAT22	**BB2**	**ADM2**	**X/$\overline{R}$2**	**ACKS2**	**–**	**–**	**–**	**–**	DBh
PW01CON	**PW0 F**	**PW0 DC**	**PW0 OE**	**PW0 T/C**	**PW1 F**	**PW1 DC**	**PW1 OE**	**PW1 T/C**	DDh
PWM0									DEh
PWM1									DFh
ACC									E0h
PORT8	**P8.7**	**P8.6**	**P8.5**	**P8.4**	**P8.3**	**P8.2**	**P8.1**	**P8.0**	E4h
PW23CS	**PW2S2**	**PW2S1**	**PW2S0**	**PW2EN**	**PW3S2**	**PW3S1**	**PW3S0**	**PW3EN**	E5h
PW2FG									E6h
PW3FG									E7h
EIE	**EPB2**	**EWDI**	**EKD**	**EPB1**	**EKB**	**E2W2**	**EAD**	**E2W1**	E8h
PORT9	**P9.7**	**P9.6**	**P9.5**	**P9.4**	**P9.3**	**P9.2**	**P9.1**	**P9.0**	ECh
PW23CON	**PW2 F**	**PW2 DC**	**PW2 OE**	**PW2 T/C**	**PW3 F**	**PW3 DC**	**PW3 OE**	**PW3 T/C**	EDh
PWM2									EEh
PWM3									EFh
B									F0h
PORT10	**P10.7**	**P10.6**	**P10.5**	**P10.4**	**P10.3**	**P10.2**	**P10.1**	**P10.0**	F4h
PMSTAT2	**P2ST7**	**P2ST6**	**P2ST5**	**P2ST4**	**PC/D2**	**P2ST2**	**PIBF2**	**POBF2**	F5h
PMDIN2									F6h
PMDOUT2									F7h
EIP	**PPB2**	**PWDI**	**PKD**	**PPB1**	**PKB**	**P2W2**	**PAD**	**P2W1**	F8h

5.0 CORE I/O RESOURCES

The SEM incorporates a full complement of the 80C52–compatible I/O resources as well as a number of specialized I/O resources which are associated with the Dallas High–Speed micro core. These features are described in this section.

5.1 PROGRAMMABLE TIMERS

Three programmable timers are included which are compatible with the standard 80C52. All of the functions are duplicated and all of the control bits and registers associated with these functions are in their standard locations. The standard operating modes of each timer are fully described in the Dallas High Speed Micro User's Guide.

There is one important difference between the Dallas High Speed Micro Core and the 8051 regarding timers. The original 8051 used 12 clocks per cycle for timers as well as for machine cycles. The High Speed Micro architecture normally uses 4 clocks per machine cycle. However, in the area of timers and serial port, the High Speed Micro will default to 12 clocks per cycle on reset. This allows existing code with real–time dependencies such as baud rates to operate properly.

If an application needs higher speed timers or serial baud rates, the user can select individual timers to run at the 4 clock rate. The Clock Control register (CKCON; 8Eh) determines these timer speeds. When the relevant CKCON bit is a logic 1, the High Speed Micro core uses 4 clocks per cycle to generate timer speeds. When the bit is a 0, the High Speed Micro core uses 12 clocks for timer speeds. The reset condition is a 0. CKCON.5 selects the speed of Timer 2. CKCON.4 selects Timer 1 and CKCON.3 selects Timer 0. Note that unless a user desires very fast timing, it is unnecessary to alter these bits. Note that the timer controls are independent.

5.2 SERIAL PORT

The SEM provides a serial port (UART) that is identical to the 80C52. The duplicate serial port implemented as described in the Dallas High Speed Micro User's Guide is not present. Operation of the original serial port, which is called Serial Port 0, is fully described in the User's Guide.

5.3 WATCHDOG TIMER

To prevent software from losing control, the SEM includes a programmable Watchdog Timer. The Watchdog is a free running timer that sets a flag if allowed to reach a preselected time–out. It can be (re)started by software.

A typical application is to select the flag as a reset source. When the Watchdog times out, it sets its flag which generates reset. Software must restart the timer before it reaches its time–out or the processor is reset.

Software can select one of four time–out values. Then, it restarts the timer and enables the reset function. After enabling the reset function, software must then restart the timer before its expiration or hardware will reset the CPU. Both the Watchdog Reset Enable and the Watchdog Restart control bits are protected by a "Timed Access" circuit. This prevents errant software from accidentally clearing the Watchdog. Time–out values are precise since they are a function of the crystal frequency as shown below in Table 5–1. For reference, the time periods at 25 MHz also are shown.

The Watchdog also provides a useful option for systems that do not require a reset circuit. It will set an interrupt flag 512 clocks before setting the reset flag. Software can optionally enable this interrupt source. The interrupt is independent of the reset. A common use of the interrupt is during debug, to show developers where the Watchdog times out. This indicates where Watchdog must be restarted by software. The interrupt also can serve as a convenient time–base generator or can wake–up the processor.

The Watchdog function is controlled by the Clock Control (CKCON – 8Eh), Watchdog Control (WDCON – D8h), and Extended Interrupt Enable (EIE – E8h) SFRs. CKCON.7 and CKCON.6 are WD1 and WD0 respectively and they select the Watchdog time–out period as shown in Table 5–1. A complete operational description for the Watchdog Timer is given in the Dallas High Speed Micro User's Guide.

WATCHDOG TIMER INTERRUPT / RESET TIMEOUT VALUES Table 5–1

WD1	WD0	INTERRUPT TIME–OUT	TIME (25 MHz)	RESET TIME–OUT	TIME (25 MHz)
0	0	2^{17} clocks	5.243 ms	2^{17} + 512 clocks	5.263 ms
0	1	2^{20} clocks	41.94 ms	2^{20} + 512 clocks	41.96 ms
1	0	2^{23} clocks	335.54 ms	2^{23} + 512 clocks	335.56 ms
1	1	2^{26} clocks	2684.35 ms	2^{26} + 512 clocks	2684.38 ms

5.4 PARALLEL I/O PORTS

The SEM incorporates the original four pseudo–bi–directional parallel I/O ports found in the 80C52: Ports 0, 1, 2 and 3. All of these ports operate logically as documented in the Dallas High Speed Micro User's Guide. All of the Port 0, 1, 2, and 3 pins exhibit the same electrical characteristics as documented in the user's guide except for P1.7 – P1.2 which are open–drain pins.

In addition to these basic ports, the SEM adds an additional seven 8–bit ports. All of these additional ports incorporate the same logical I/O structure as the original four, Ports 0 through 3. Therefore, they are programmed the same as Ports 0–3. The SFR addresses for the new ports are as follows:

Port 4: 0A4H
Port 5: 0ACH
Port 6: 0BCH
Port 7: 0D4H
Port 8: 0E4H
Port 9: 0ECH
Port 10: 0F4H

5.4.1 Alternate Pin Function Summary

A number of port pins on the SEM offer an optional alternate function. These functions are individually selectable; i.e. each pin can be programmed for use as a general purpose I/O or to serve the alternate function. In order to use the alternate function, the associated port latch must be programmed to a 1. The alternate functions are summarized in Table 5–2 below.

PORT PIN ALTERNATE FUNCTIONS Table 5–2

PIN(S)	ALTERNATE PIN(S)	ALTERNATE FUNCTION(S)
P0.7 – P0.0	AD7 – AD0	Mux. addr. / data bus
P1.7	–	None
P1.6	–	None
P1.5	SDA2	2–Wire Serial Port Data Input/Output 2
P1.4	SCL2	2–Wire Serial Port Clock 2
P1.3	SDA1	2–Wire serial port data Input / Output 1
P1.2	SCL1	2–Wire serial port clock 1
P1.1	T2EX	Timer 2 capture / reload input
P1.0	T2	Timer 2 output pulse
P2.7 – P2.0	A15 – A8	Address bus outputs
P3.7	$\overline{RD}$	Read strobe output
P3.6	$\overline{WR}$	Write strobe output
P3.5	T1	Timer 1 input
P3.4	T0	Timer 0 input
P3.3	$\overline{INT1}$	External interrupt 1 input (active low)
P3.2	$\overline{INT0}$	External interrupt 0 input (active low)
P3.1	TXD0	UART Transmit

PORT PIN ALTERNATE FUNCTIONS Table 5–2 (cont'd)

P3.0	RXD0	UART Receive
P4.7 – P4.0	KSI.7 – KSI.0	Keyboard scan inputs
P5.7 – P5.0	AI.7 – AI.0	A/D analog inputs
P6.7	SOC	A/D start of conversion input
P6.6	–	(None)
P6.5 – P6.4	PWI.1 – PWI.0	PWM channels 1 and 0 inputs
P6.3 – P6.0	PWO.3 – PWO.0	PWM channels 3, 2, 1, and 0 outputs
P7.7 – P7.0	AMI.7 – AMI.0 LED.7 –LED.0	Activity monitor inputs / LED Control
P8.7 – P8.0	KSO.7 – KSO.0	Keyboard Scan Outputs
P9.7 – P9.0	KSO.15 – KSO.8	Keyboard Scan Outputs
P10.7 – P10.0	–	(None)

6.0 2–WIRE SERIAL INTERFACE

6.1 INTRODUCTION

The SEM provides two industry standard 2–Wire serial interfaces for processor–processor and processor–slave bi–directional communication. The major features of these buses include:

- Only two signal lines are required per bus: a serial clock line (SCL) and a serial data line (SDA).
- Each device connected to the bus is software addressable by a unique address.
- Masters can operate as Master–transmitter or Master–receiver.
- Multiple master capability via collision detection and arbitration to prevent data corruption if two or more masters simultaneously initiate a data transfer.
- Serial clock synchronization allows devices with different bit rates to communicate via the same serial bus.
- Devices can be added to or removed from the bus without affecting any other circuit on the bus.

Both on–chip 2–Wire ports support four modes of operation: Master transmitter, Master receiver, Slave transmitter, Slave receiver. Byte–oriented data transport, clock generation, address recognition, and bus control arbitration are all performed by the hardware. Double–buffering is provided on receive, allowing a full word time to service the port during multiple byte data transfers.

Figure 6–1 is a block diagram which illustrates the hardware of both 2–Wire serial ports. For simplicity “x” represents 1 for Port 1 and 2 for Port 2.

2–WIRE SERIAL PORT BLOCK DIAGRAM Figure 6–1

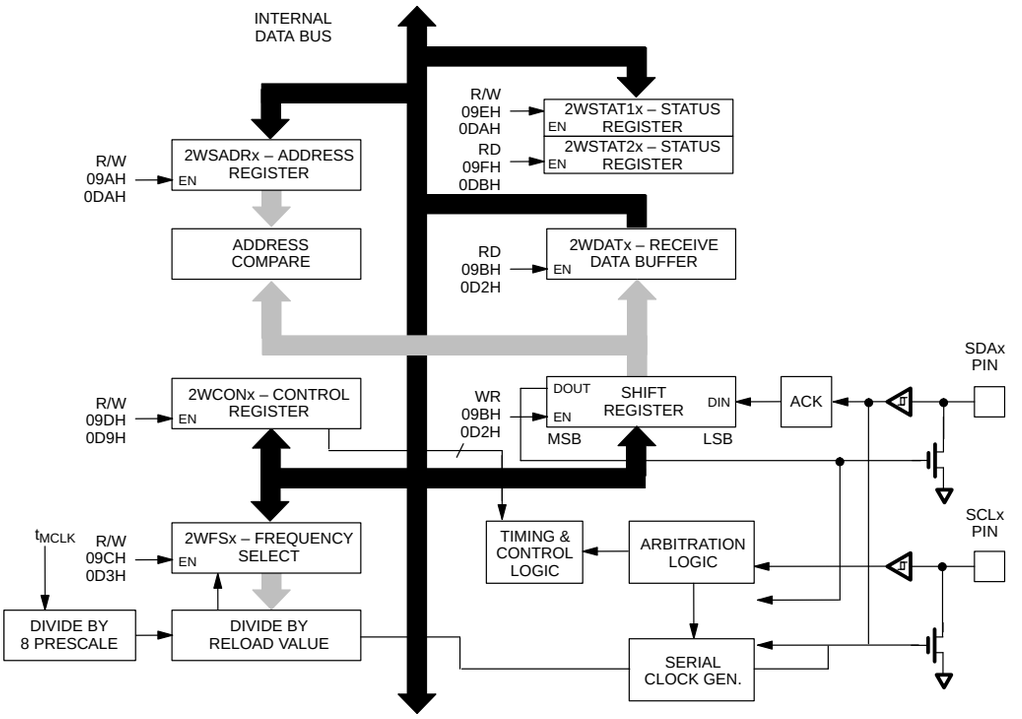

6.2 REGISTER DESCRIPTION

The microcontroller interface to either 2–Wire serial port consists of six Special Function Registers (SFR's), per Port, which are documented below. None of these registers are bit addressable.

6.2.1 2WFSx – 2–Wire Frequency Select Registers

2WFS1; SFR ADDR.=09CH, 2WFS2; SFR ADDR.=0D3H

BIT 7	BIT 6	BIT 5	BIT 4	BIT 3	BIT 2	BIT 1	BIT 0

Read/Write Access: Unrestricted.
Initialization: 00H on any type of reset

The 2–Wire Frequency Select Registers are 8–bit read/write registers which are used by the microcontroller to set the 2–Wire clock data rate. The value programmed into these registers sets the reload value for an 8–bit auto–reload timer, which is clocked by the CPU machine clock (t_{MCLK}) through a divide–by–8 prescaler. The CPU machine clock period is the oscillator clock period (t_{CLK}) multiplied times 4, 64, or 1024 as determined by the programming of the system clock divider bits (CD1, CD0) in the PMR register. The 2–wire clock frequency can therefore be calculated using the following formula:

$f_{2Wx} = f_{MCLK} /((8 * \text{Reload}) +2)$; $t_{2WCL} = 1 / f_{2Wx}$

where Reload=(2WFSx register value) for 2–255, and
Reload=(256) for 2WFSx value=0
Reload=(1) is invalid

6.2.2 2WDATx – 2–Wire Data I/O Registers

2WDAT1; SFR ADDR.=09BH, 2WDAT2; SFR ADDR.=0D2H

BIT 7	BIT 6	BIT 5	BIT 4	BIT 3	BIT 2	BIT 1	BIT 0

Read/Write Access: Unrestricted.
Initialization: 00H on any type of reset

The Data I/O Registers consist of transmit buffers and the receive buffers. Both registers are located at SFR address 9BH for Port 1 and D2H for Port 2. A write to these locations results in a write to the transmit buffer registers, while a read results in a read from the receive buffer registers.

During transmit, a write to these locations results in 8–bits of data being transmitted on the 2–Wire bus when either master or slave transmit mode is established. When master or slave receive mode is in effect, 8–bits are shifted in via the shift register and immediately transferred to the receive buffer. All data is shifted MSB first.

6.2.3 2WSADRx – 2–Wire Slave Address Registers

2WSADR1; SFR ADDR.=09AH, 2WSADR2; SFR ADDR.=0D1H

BIT 7	BIT 6	BIT 5	BIT 4	BIT 3	BIT 2	BIT 1	BIT 0
SLA6	SLA5	SLA4	SLA3	SLA2	SLA1	SLA0	–

Read/Write Access: Unrestricted.
Initialization: 00H on any type of reset

SLA6–0 – Slave Address bits

SLA6–0 are used to establish the 7–bit address recognized by the 2–Wire port when it is operating in slave mode. The 7–bit slave address is MSB justified when it is read or written by the firmware. When read, bit 0 is always returned as a 0.

6.2.4 2WCONx – 2–Wire Control Registers

2WCON1; SFR ADDR.=09DH, 2WCON2; SFR ADDR.=0D9H

BIT 7	BIT 6	BIT 5	BIT 4	BIT 3	BIT 2	BIT 1	BIT 0
2WENx	STAx	STOx	2WIFx	BMMx	ANAKx	–	–

Read/Write Access: Unrestricted.
Initialization: 00H on any type of reset

The 2–Wire Control Register bits <7:2> can be read or written by the microcontroller. Bit <1,0> are reserved for future use and should be ignored by the firmware. Refer to the bit description below for specific set/reset conditions.

2WENx – 2–Wire Enable

When 0, the 2–Wire port is disabled. SCLx and SDAx pins are off (high–Z), no internal processing or bus monitoring is performed, and all internal registers are reset. If SDAx and SCLx are left connected to the 2–Wire bus with 2WENx = 0, the serial interface hardware will not generate or respond to activity on the bus. Also when 2WENx = 0, SDAx and SCLx can be used as open drain general purpose I/O port pins (P1.5, P1.3, P1.4, and P1.2, respectively) and are accessible via the port 1 latch register.

When 2WENx = 1, the 2–Wire interface is enabled. P1.5, P1.4, P1.3 and P1.2 port latches must be set to 1 in order for both serial interfaces, to operate.

STAx – 2–Wire Start

The firmware can generate a start or a repeat start condition by setting STAx=1 with STOx=0. The hardware will then wait for the bus to be free, and generate a start condition on the bus in an attempt to gain control of the bus as a master. If the start condition fails, or if the port loses arbitration, the hardware will repeat its attempt until it is successful as long as STAx=1. When the START condition is successfully asserted, the TSTAx flag will be set.

If the STAx bit remains set while in the master mode throughout the time that a byte is being transmitted or received, then a repeat START condition will be asserted at the end of the byte transfer. Again, TSTAx will be set when the repeat start is successfully asserted.

If STAx is cleared to 0, no further START or repeat START will be attempted.

STOx – 2–Wire Stop

If STOx=1 when the hardware has control of the bus as a master, a stop condition is issued on the bus after the transmit or receive of any byte currently in progress is completed. When the STOP condition is transmitted on the bus, the STOx flag will automatically be cleared to 0.

If both STAx and STOx are set in the master mode, the STOP condition will be generated first. After the STOx bit is cleared a START will be generated.

When STOx=0, no STOP condition is generated.

2WIFx – 2–Wire Interrupt Flags

2WIFx serves as the main interrupt flag bit for the 2–Wire port. If BMMx = 0, (in 2WCONx register) 2WIFx is set to 1 whenever operating as a master or as an addressed slave and one or more of the following interrupt source bits in 2–Wire Status Register (2WSTAT1x) are set (active): BERx, ARLx, RSTOx, TXIx, RXIx, TSTAx.

When BMMx=1, the 2WIFx flag will be set when any of the following source bits are set: BERx, ARLx, RSTOx, TXIx, RXIx, TSTAx, RSTAx. Note that in this case RSTAx also generates an interrupt.

Regardless of the state of the BMMx bit, the 2WIFx bit will be cleared when all of its source bits are cleared.

BMMx – Bus Monitor Mode

When BMMx=0, the 2–Wire port will only generate interrupts if it is operating as a master or being addressed as a slave.

If bus monitoring is enabled with BMMx = 1, the port can “listen” to (receive) packets sent from external masters to external slaves on the 2–Wire bus. In this mode the

port will generate an interrupt for every action on the bus even when it is not operating as a master or being addressed as a slave. As a result, when a transfer takes place between an external master and slave, the port will be notified of a transmitted START condition, will receive the subsequent address and data bytes on the bus, and will finally be notified of a transmitted STOP condition.

ANAKx – Assert Negative AcKnowledge

If ANAKx is set to 1, a negative acknowledge bit will be returned on the next serial word received. If it is 0, a positive acknowledge bit will be returned.

6.2.5 2WSTAT1x – 2–Wire Status Register 1

2WSTAT11; SFR ADDR.=09EH, 2WSTAT12; SFR ADDR.=0DAH

BIT 7	BIT 6	BIT 5	BIT 4	BIT 3	BIT 2	BIT 1	BIT 0
BERx	ARLx	RSTOx	TXIx	RXIx	TSTAx	RSTAx	–

Read/Write Access: Unrestricted.
Initialization: 00H on any type of reset

BERx – Bus ERror

BERx is a status flag which will be set to 1 in the event that a stop condition is received with greater or less than 8 bits shifted. BERx is cleared when the 2WSTAT1x register is read.

ARLx – ARbitration Loss

This bit is set to a 1 when the 2–Wire hardware loses arbitration to another master on the bus. ARLx is cleared when the 2WSTAT1x register is read. If arbitration is lost, the bus will enter the not–addressed slave state and will receive data beginning with the byte where arbitration was lost.

RSTOx – Received STOP

RSTOx is set when a valid stop condition is received when operating as a slave. RSTOx is cleared when the 2WSTAT1x register is read.

TXIx – Transmit Interrupt Flags

During transmit, TXIx is set when a byte has been completely shifted out and the acknowledge bit received from the slave. The TXIx flag must be cleared by firmware before any data written to the transmit buffer can be transmitted, or after setting STAx or STOx bits. If TXIx is not cleared the 2–Wire bus will be held low until it is cleared.

RXIx – Receive Interrupt Flags

During receive, RXIx is set when the receive buffer register is loaded with a byte of data which has just been shifted in. The RXIx flag must be cleared by firmware before the next byte of data can be shifted in.

TSTAx – Transmitted Start

TSTAx will be set to a 1 when a START condition has been successfully transmitted on the 2–Wire bus. The TSTAx must be cleared by firmware before the transmission can begin if not the 2–Wire bus will be held low until it is cleared.

RSTAx – Received Start

RSTAx = 1 when a START condition has been detected on the bus. RSTAx will be cleared to 0 when the 2WSTAT1x register is read. If BMMx = 0, RSTAx does not affect the setting of 2WIFx. If BMMx = 1, then RSTAx will set 2WIFx.

6.2.6 2WSTAT2x – 2–Wire Status Register 2

2WSTAT21; SFR ADDR.=09FH, 2WSTAT22; SFR ADDR.=0DBH

BIT 7	BIT 6	BIT 5	BIT 4	BIT 3	BIT 2	BIT 1	BIT 0
BBx	ADMx	X/$\overline{R}$x	ACKSx	–	–	–	–

Read/Write Access: Read Only.
Initialization: 00H on any type of reset

BBx – Bus Busy
This bit is used to signal the microcontroller that the 2–Wire bus is currently in use either by another master or by the microcontroller itself. It will be set at detection (or transmission) of a START and will be reset at detection (or transmission) of STOP.

ADMx – ADdress Match
This bit is set to a 1 when an address has been received which either matches the value stored in the Address Register or is the General Call address (00H). The received address is available in the receive buffer. RXIx will also be set when an address is received. ADMx will stay set until a STOP or repeat START is generated.

X/$\overline{R}$x – Xmit / Receive
When X/$\overline{R}$x is set to 1, the 2–Wire port has entered transmit mode. When X/$\overline{R}$x is cleared to 0, receive mode operation is signaled.

ACKSx – ACKnowledge Status
ACKSx reflects the state of the acknowledge bit at the end of a byte transfer on the bus. If a positive acknowledge was detected, ACKSx will be set to 1. If a negative acknowledge is detected, ACKSx will be cleared to 0.

6.3 OPERATIONAL DESCRIPTION
A typical 2–Wire bus configuration is shown in Figure 6–2 and Figure 6–3 illustrates how a data transfer is performed. Two types of data transfers are possible on the 2–Wire bus:

1. Data transfer from a master transmitter to a slave receiver. The first byte transmitted by the master is the slave address with the R/$\overline{W}$ bit set to 0 (write), followed by a number of data bytes. The slave returns an acknowledge bit after each received byte.
2. Data transfer from a slave transmitter to a master receiver. The first byte is again the slave address, this time with the R/$\overline{W}$ bit set to 1 (read). The slave returns an acknowledge bit for this first byte. Next, the slave will transmit the pre–determined number of data bytes to the master. The master returns an acknowledge bit after each byte is received for all but the last byte. At the end of the last byte, the master returns a negative acknowledge. This action signals the slave to stop transmitting.

In both types of transfers, the master generates all of the serial clock pulses as well as the START and STOP conditions. A transfer is ended with a STOP condition or with a repeated START condition. Since a repeated START condition is also the beginning of the next serial transfer, the 2–Wire bus will not be released in this case.

Both on–chip 2–Wire ports support four modes of operation: Master transmitter, Master receiver, Slave transmitter, and Slave Receiver. Operating the ports in these four modes is described in detail below. Following any type of reset, both 2–Wire ports will be configured in slave receive mode.

TYPICAL 2–WIRE BUS CONFIGURATION Figure 6–2

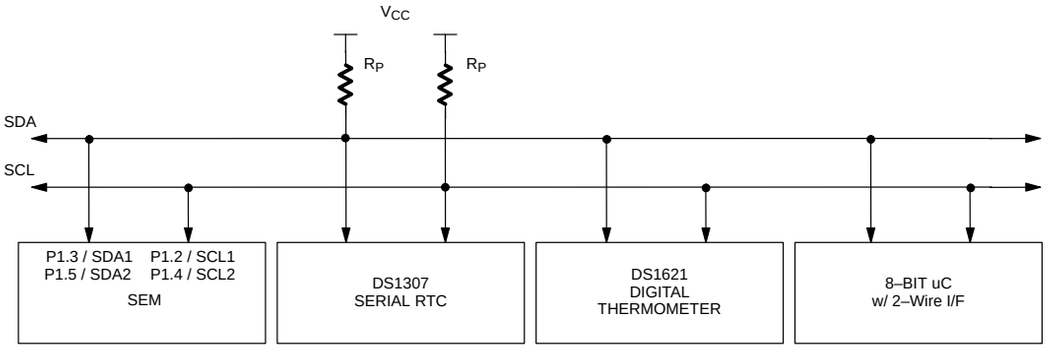

DATA TRANSFER ON EITHER 2–WIRE BUS Figure 6–3

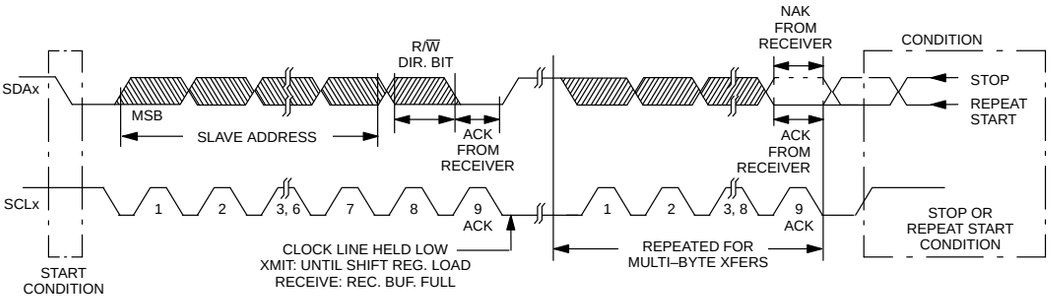

6.3.1 Master Transmit

In the master transmit mode, the SEM is configured as a master device and transfers a number of data bytes to a slave receiver. A timing diagram in Figure 6–4 illustrates the interaction between the firmware and hardware with respect to events on the 2–Wire bus.

The master transmit mode can now be entered by setting the STAx bit. The 2–Wire port logic will test the 2–Wire bus and generate a start condition as soon as the bus is free. As soon as the start condition is transmitted, the TSTAx flag will be set. In addition, the X/$\overline{R}$x bit will be set to a 1, indicating transmit operation is in effect.

In response to TSTAx being set, the firmware can now write to the transmit buffer an initial byte for the message as follows:

7	6	5	4	3	2	1	0
7–bit Slave Address							0

MASTER TRANSMIT OPERATION TIMING Figure 6–4

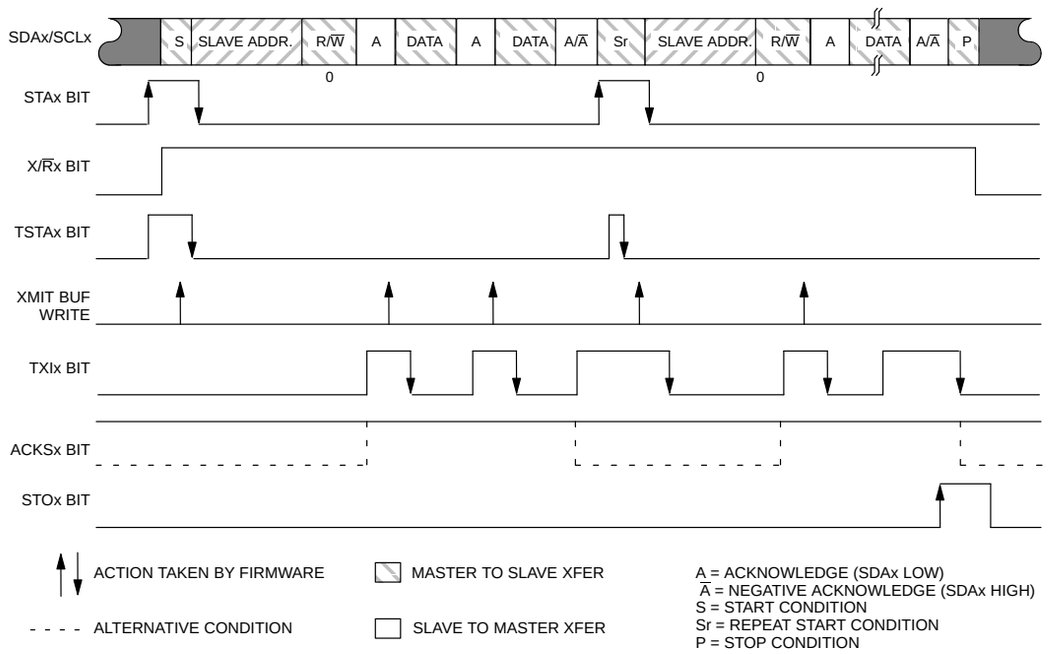

The desired slave address is placed in the most significant 7–bits and a “0” in the least significant bit (direction bit position) indicating a write operation. Transmission of this byte will begin immediately upon writing the byte. After writing the byte, the firmware must clear the TSTAx and STAx bits. The firmware can now exit the interrupt service routine or otherwise wait until the initial byte is transmitted.

When the slave address and direction bit have been sent and a positive acknowledge bit received back from the slave, the TXIx bit will be set, indicating the transmission is complete. At this point the firmware can load the first data byte into the transmit buffer and then clear the TXIx bit. Because transmit mode is now in effect, clearing TXIx causes the hardware to load the contents of the buffer into the shift register. Therefore loading the buffer before clearing TXIx will insure that the hardware will not load the previous byte into the shift register and thereby re–transmit it. Subsequent data bytes can be successfully transmitted each time TXIx is set by repeating the above procedure. In the event that a negative acknowledge bit is received back from the slave after sending any bytes, the transmission can be aborted by issuing a repeat START or STOP condition as described below.

As shown in the diagram, a repeat start condition can be sent following the transmission of a data byte. In this case the firmware should first set STAx to a 1 after detecting that the TXIx flag is set. Since the port logic has control of the bus, a repeat START condition will be issued immediately, resulting in TSTAx being set to 1. The firmware must then reset TSTAx, write the next slave address and direction bit (0 = master transmit) to the transmit buffer, and clear TXIx to 0. This sequence will insure that the repeat start is sent before the data containing the slave address is transmitted. Finally, the STAx bit should be cleared to 0 so that another repeat START will not be sent following the slave address byte. Subsequent data bytes can then be transmitted as described above.

When TXIx is set after the last byte of data has been transmitted, a STOP condition can be issued by setting the STOx bit to a 1. The TXIx bit must be cleared at this point by firmware; this action will not cause any additional data to be sent since the port will be in receive mode as a result of setting STOx. After the STOP condition is sent, the STOx bit will be automatically cleared and X/$\overline{R}$x will be cleared to 0.

In the Master transmit mode, the arbitration logic checks that every transmitted logic 1 actually appears as a logic 1 on the 2–Wire bus. If another device on the bus overrules a logic 1 and pulls the SDAx line low, arbitration is lost, and the port logic immediately changes from Master transmit mode to Slave Receive mode. The port logic will continue to output clock pulses on SCLx until transmission of the current serial byte is complete. At the completion of the byte, the ARLx bit will be set to a 1. The resulting transmitted serial word from the master which won the arbitration will be available in the receive buffer. If arbitration was lost during the transmission of the slave address and the resulting address matches the port’s programmed slave address in 2WSADRx, then the ADMx bit will also be set to 1.

6.3.2 Master Receive

Figure 6–5 illustrates Master Receive operation. In Master Receive mode, the SEM is configured as a master and one or more data bytes are received from a slave device.

The transfer is initiated as in the Master Transmit mode, beginning with either a start condition or a repeat start condition, followed by the transmission of the slave address. However, in this case the direction bit should be set to a 1 to signal Master Receive operation.

When the acknowledge bit for the slave address is sampled, the TXIx bit will be set to a 1 and ACKSx bit will reflect the state of the bit returned from the slave. Since the direction bit was set to 1, the X/$\overline{R}$x bit will be cleared to 0 indicating receive operation is now in effect. The TXIx bit must be cleared to 0 by firmware to remove the interrupt condition. No further bytes will be transmitted in the packet since the port logic is in receive mode.

If it is desired to return a positive acknowledge bit upon the receipt of subsequent data byte(s), the ANAKx bit should be cleared to 0. Upon the receipt of the data byte, the RXIx bit will be set at the time the acknowledge bit is transmitted. The firmware should read the incoming byte from the receive buffer register followed by a clear of RXIx to 0. Subsequent incoming data bytes are handled in the same manner.

After each byte is received and loaded into the receive buffer and the RXIx flag cleared, the next byte will begin to be shifted in immediately.

MASTER RECEIVE OPERATION TIMING Figure 6–5

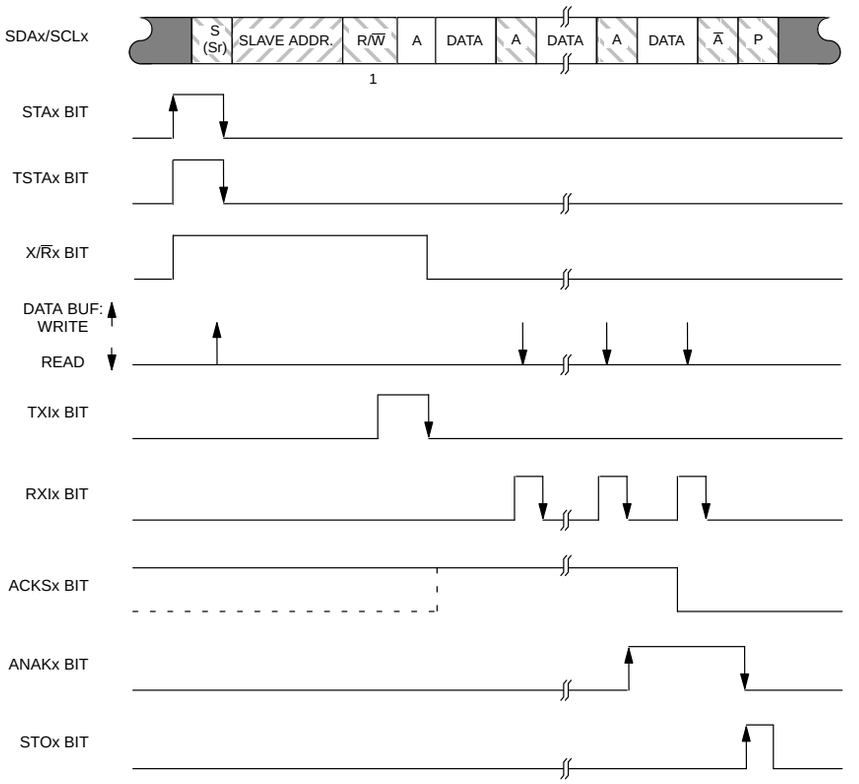

In response to RXIx being set on the next to the last data byte, the ANAKx bit can be set so that a negative acknowledge bit is returned to the slave when the last data byte is received. This action signals the slave to stop transmitting bytes and return to receive mode. If there is only one byte to be received from the slave device, the ANAKx bit can be set at the time the slave address is transmitted so that the negative acknowledge signal will be transmitted after the reception of the single byte.

When the last data byte is received and RXIx cleared, the STOP condition can be issued by setting the STOx bit to a 1. ANAKx can be returned to a 0 at this time to return a positive acknowledge on future received bytes (e.g., received slave address). After the STOP condition is sent the STOx bit will be automatically cleared and X/$\overline{R}$x will remain at 0, indicating the port hardware is still in receive mode.

Arbitration with another master may be lost during the transmission of the slave address as described above in the Master Transmit mode. Once receive operation is in progress in the Master Receive mode, then arbitration loss can only occur while a negative acknowledge is being returned on the bus. In this case arbitration is lost when another master on the bus pulls this signal low. Since this occurs at the end of a serial byte, no further clock pulses are generated. The ARLx flag will be set to signal this event.

6.3.3 Slave Receive

Figure 6–6 illustrates the timing for Slave Receive operation. In this mode another master transfers one or more bytes to the SEM which is addressed as a slave device.

When the 2–Wire ports are initialized following a reset, the SEM's 7–bit slave addresses are established by

programming the 2WSADRx register with the address value left–justified. The ANAKx bit should be cleared to 0 to allow a positive acknowledge bit to be issued when the SEM's slave address is received.

SLAVE RECEIVE OPERATION TIMING Figure 6–6

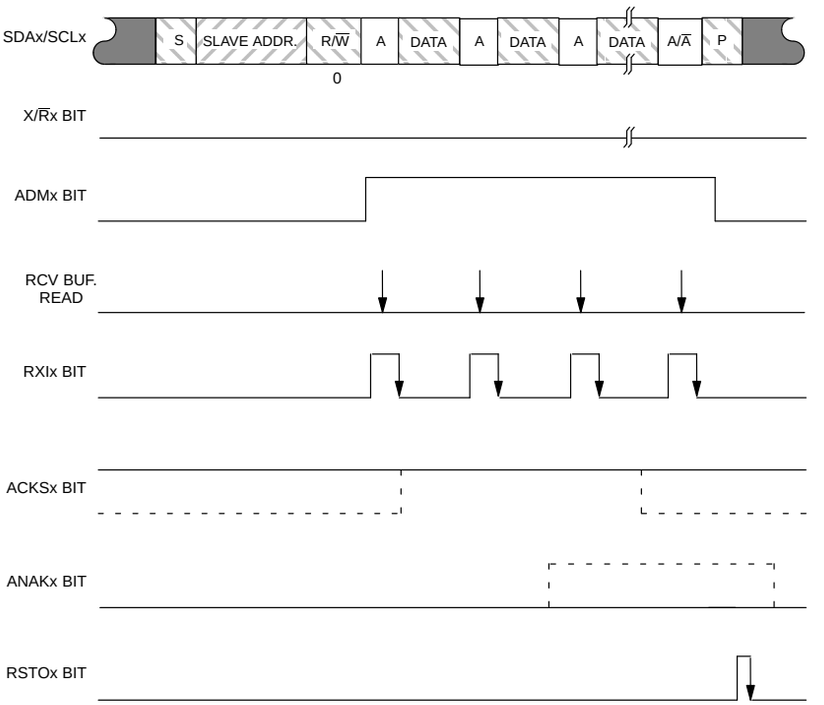

The transfer is initiated by the external master beginning with either a START or Repeat START condition, followed by the transmission of the SEM's slave address with the direction bit cleared to 0. This byte will be shifted in and loaded into the receive buffer register at the time the acknowledge bit is returned to the master, resulting in RXIx being set to 1. In addition, an address match condition will occur as indicated by the ADMx flag set to 1. Upon detecting these flags, the firmware should respond by reading the receive buffer in order to determine if the programmed slave address or the general call address was received. Following the read of the buffer, the RXIx flag must be cleared. Also at this time the firmware should insure that the 2WIFx bit is cleared to 0, so that the interrupt flag will be set in response to subsequent received data byte(s) and STOP condition.

Upon the receipt of the first data byte, the RXIx bit will be set at the time the acknowledge bit is transmitted. The firmware should read the incoming byte from the receive buffer register followed by a clear of RXIx to 0. Subsequent incoming data bytes are handled in the same manner. If desired, the ANAKx bit can be set to cause a negative acknowledge to be issued upon receipt of the next byte.

When the last byte of data has been sent, the bus master will issue a STOP condition, which will result in the RSTOx flag set to a 1. At this time, the port hardware returns to the not–addressed slave mode.

6.3.4 Slave Transmit

Figure 6–7 illustrates the timing for Slave Transmit mode operation. In this mode the SEM, addressed as a slave, transfers one or more bytes to the bus master.

The transfer is initiated by the external master beginning with either a START or Repeat START condition, fol-

lowed by the transmission of the SEM's slave address with the direction bit set to 1. This byte will be shifted in and loaded into the receive buffer register at the time the acknowledge bit is returned to the master, resulting in RXIx being set to 1. In addition, an address match condition will occur as indicated by the ADMx flag set to 1.

SLAVE TRANSMIT OPERATION TIMING Figure 6–7

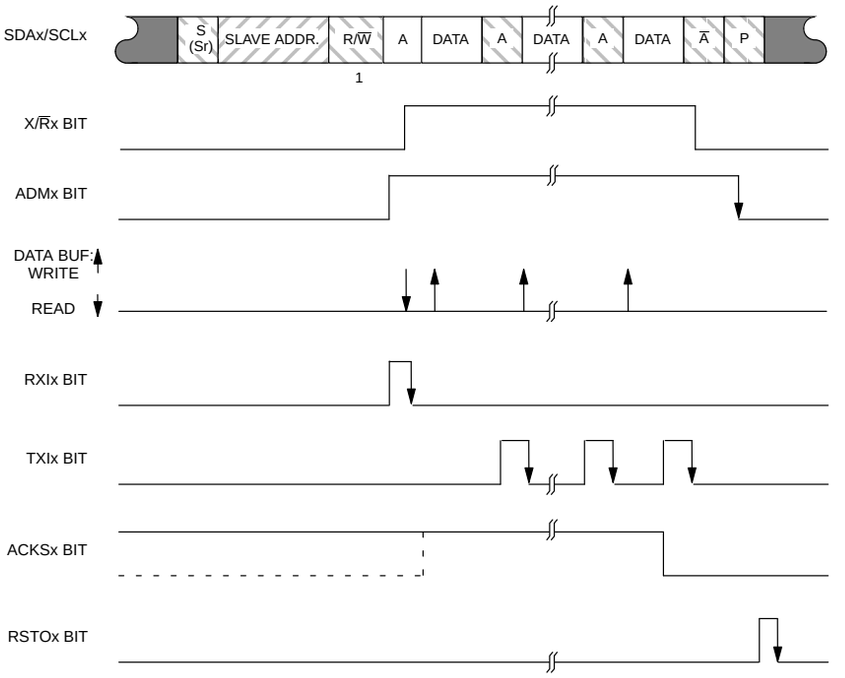

Upon detecting these flags, the firmware should respond by reading the receive buffer in order to determine if the programmed slave address or the general call address was received. Following the read of the buffer, the RXIx flag must be cleared. Also at this time the firmware should insure that the 2WIFx bit is cleared to 0, so that the interrupt flag will be set in response to subsequent received data byte(s) and STOP condition.

If the programmed slave address was received, the firmware can now send the first data byte by a write to the transmit buffer. After the first data byte is transmitted and the acknowledge bit received, the TXIx flag will be set to 1. If the acknowledge bit ACKSx is returned as a 1, the next byte can be loaded into the transmit buffer and the TXIx bit cleared. Successive bytes can be handled in the same manner. Whenever any data is transmitted from the 2–Wire port, the byte actually transferred on the bus will be shifted back in and loaded into the receive buffer.

If the acknowledge bit ACKSx is returned as a 0 on a transmitted byte, then the master is signaling this as the last data byte in the packet. In this event, the X/Rx bit will be automatically cleared to 0 and the firmware should not write any more data bytes to the transmit buffer. The TXIx bit must be cleared at this point by firmware; this action will not cause any additional data to be sent since the port is now in receive mode.

When the last byte of data has been sent, the bus master will issue a STOP condition, which will result in the RSTOx bit set to a 1. At this time, the port hardware returns to the not–addressed slave mode.

6.3.5 Bus Monitor Mode Operation

The bus monitor mode is provided to allow the SEM to "listen" as a third party to conversations between external master and slave devices. This mode can be useful for diagnostic purposes, or to help the system recover from a detected error condition.

When the BMMx bit is set to 1, bus monitoring is enabled. In this mode the port will generate an interrupt for every action on the bus even when it is not operating as a master or being addressed as a slave. As a result, when a transfer takes place between an external master and slave, the port will be notified of a transmitted START condition, will receive the subsequent address and data bytes on the bus, and will finally be notified of a transmitted STOP condition.

If the SEM is receiving a transfer between an external master and an external slave device, the timing is nearly identical to that for Slave Receive operation as shown in Figure 6–6. The exceptions to this timing are summarized as follows: 1) An additional interrupt will be generated when a Receive START condition is detected as indicated by RSTAx = 1. This will inform the firmware of the start of a message and allow it to identify the next byte as an address. 2) A positive acknowledge pulse will never be generated. 3) SCLx will never be held low to prevent data in the receive buffer from being overwritten. Other than these differences bytes are received and all other status is flagged as described for Slave Receiver operation.

When BMMx = 1 and the SEM is operating as a master or is being addressed as a slave, the Master Transmit, Master Receive, Slave Transmit, and Slave Receive modes will all operate exactly as documented above with the exception that RSTAx becomes an additional interrupt flag that is set whenever a START condition is detected on the bus.

When BMMx = 0, bus monitoring is disabled and interrupt flags are only generated when the port is operating as a master or being addressed as a slave device. Transfers between external devices are ignored.

7.0 A/D CONVERTER

7.1 OVERVIEW

A self–contained A/D converter is provided on the SEM. Its major features are summarized below:

- 10–bit resolution
- True 9–bit accuracy: total error no greater than ± 2 LSB's
- Monotonic with no missing codes
- eight multiplexed inputs
- Shared analog/digital pins with 60 dB isolation
- Digital window comparator / alarm
- Low power consumption

The A/D subsystem consists of a 10–bit successive approximation analog to digital converter, an 8 input analog multiplexor, a programmable reference block, a digital window comparator, and a control block as depicted in Figure 7–1.

The multiplexor selects 1 of 8 analog inputs for conversion. A conversion is initiated either by a software or hardware generated start of conversion signal. An optional mode enables continuous conversions on a selected channel. At the completion of a conversion the A/D generates an end of conversion signal indicating that the conversion is complete and the results may be read. An end of conversion can also be used to generate an interrupt.

After the conversion is complete, the 10–bit result is available in two registers. In order to accommodate a variety of applications, the A/D result can be programmed to be presented either as eight msbs and eight lsbs in separate registers, or as a right justified 10–bit result with the most significant two bits of the result right–justified in the most significant byte. An A/D conversion can be performed in a minimum of 16 µsec. An interrupt can be programmed to occur at the end of a conversion.

A digital window comparator is available to allow automatic monitoring of external signals without burdening the software. The window comparator allows software to select an upper and lower limit for comparison. In addition, the hardware can be programmed to look inside or outside of the window. By adjusting the window location, the hardware can automatically look for results that are above a number, below a number, inside of a range, or outside of a range. When the window comparator qualifier function is used, an end–of–conversion interrupt will only be generated when selected criteria for the conversion result has been met.

7.2 ANALOG POWER / SLEEP MODE

The A/D block provides separate power and ground pins to provide power to the analog circuits. This allows the A/D to operate from a clean supply if available. Analog power is supplied through AVCC and AGND. While these pins do supply power, they are not the source of the A/D reference. The converter will draw a maximum of 1 mA during full operation.

A minimum time of t_{AD} required for the analog circuitry to stabilize. The ADON bit is cleared to 0 following a reset – leaving the A/D converter powered down.

A/D CONVERTER BLOCK DIAGRAM Figure 7–1

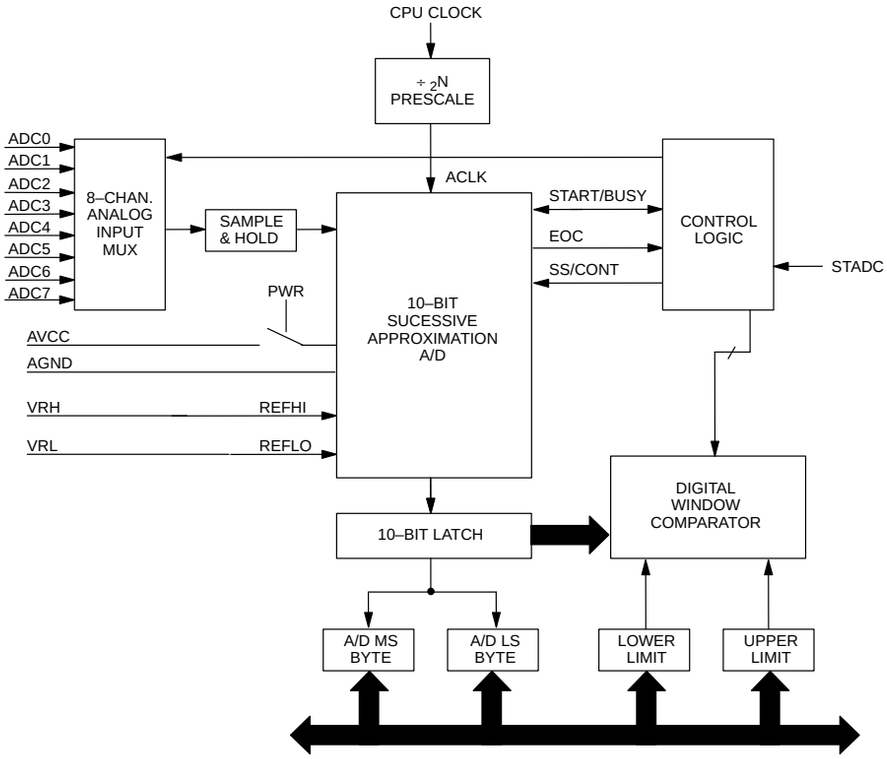

7.3 REFERENCE OPTION

An A/D conversion is the process of assigning a digital code to an analog input voltage. This code represents the input value as a fraction of the reference voltage range, which divided by the A/D converter into 1024 codes (10–bits). The reference voltage is connected to the internal nodes called REFHI and REFLO as shown in Figure 7–1.

The REFHI and REFLO signals are connected to the VRH and VRL pins, respectively.

The result can always be calculated from the following formula:

Result = 1024 x (V_{IN} – REFLO) / (REFHI – REFLO)

7.4 SAR A/D CONVERTER

Figure 7–2 is a simplified block diagram of the successive approximation A/D converter. As with all successive approximation converters it contains a digital to analog converter (DAC), a comparator, a successive approximation register (SAR) and some control logic. A conversion is initiated by the internal start signal issued from the control logic. The successive approximation logic sets bits of the DAC starting with bit 9 and proceeding to bit 0 on each successive clock (ACLK). After each bit is set the DAC output is compared with the sampled analog input. If the DAC output is less than the analog input the bit remains set. If the DAC output is greater than the analog input the bit is reset. After all bits have been tested and set or reset accordingly, the binary value in SAR[9..0] is a digital representation of the analog input value.

SAR A/D SIMPLIFIED BLOCK DIAGRAM Figure 7–2

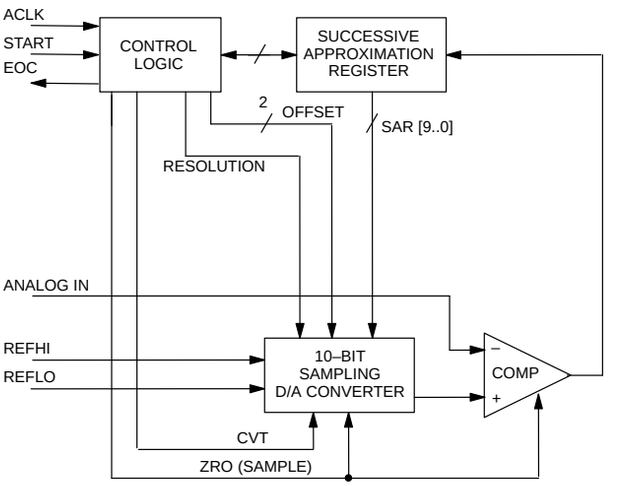

7.5 CONVERSION TIME

An internal clock signal called ACLK is used to clock the successive approximation logic in performing the A/D conversion. ACLK is derived from the microcontroller clock signal through divide–down logic. A total of 16 clock cycles are required to perform the conversion. The minimum ACLK period is 1 µs, a faster clock can result in erroneous results. At the other extreme, the maximum clock period is 6.25 µs due the dynamic nature of the internal sample–hold circuitry.

In order to meet these requirements and accommodate a wide range of CPU clock frequencies a programmable prescaler is provided to generate appropriate converter clock (ACLK) from the CPU clock.

Based on the micro's CPU clock, the ACLK frequency can be set to one of 16 values via the four A/D clock prescaler (APS) bits in the ADCON2 register. This results in a conversion clock frequency as given by the formula below:

$$t_{ACLK} = t_{MCLK} \bullet (N+1)$$

where t_{ACLK} is the analog clock period, t_{MCLK} is the CPU machine clock period, and N is the clock prescale value ranging from 0 to 15 as programmed in the APS bits. The CPU machine clock period is the oscillator clock period (t_{CLK}) multiplied times 4, 64, or 1024 as determined by the programming of the system clock divider bits (CD1, CD0) in the PMR register.

The resulting t_{ACLK} must meet the criteria of

$$1.00\ \mu s < t_{ACLK} < 6.25\ \mu s$$

Table 7–1 gives a set of conversion times at usable A/D clock prescaler settings for a range of microcontroller clock frequencies, assuming that the microcontroller machine clock is at its default value of 4 crystal clock periods.

A/D CONVERSION TIMES (µS)

PRESCALE SETTING	0.640 MHz	4.000 MHz	8.000 MHz	12.000 MHz	16.000 MHz	20.000 MHz	25.000 MHz
0	100.00	16.00	–	–	–	–	–
1	–	32.00	16.00	–	–	–	–
2	–	48.00	24.00	16.00	–	–	–
3	–	64.00	32.00	21.33	16.00	–	–
4	–	80.00	40.00	26.67	20.00	16.00	–
5	–	96.00	48.00	32.00	24.00	19.20	–
6	–	–	56.00	37.33	28.00	22.40	17.92
7	–	–	64.00	42.67	32.00	25.60	20.48
8	–	–	72.00	48.00	36.00	28.80	23.04
9	–	–	80.00	53.33	40.00	32.00	25.60
10	–	–	88.00	58.67	44.00	35.20	28.16
11	–	–	96.00	64.00	48.00	38.40	30.72
12	–	–	–	69.33	52.00	41.60	33.28
13	–	–	–	74.67	56.00	44.80	35.84
14	–	–	–	80.00	60.00	48.00	38.40
15	–	–	–	85.33	64.00	51.20	40.96

NOTES:

1. Conversion times given in microseconds (µs)
2. (–) = not a usable setting

7.6 WINDOW COMPARATOR

The window comparator allows software to identify a range of potential digital A/D results that are considered interesting. The window comparator will monitor each conversion result against user programmed selections. Results that meet the criteria will cause the comparator to set the WCM flag. By setting the WCQ bit, the end of conversion interrupt source is qualified so that only results which fall within the programmed range cause the interrupt. This feature allows software to ignore uninteresting results without actually reading the converter result.

User software can select two 8–bit comparator values. These values will be compared against the most significant 8–bits of each A/D result, designated as ADR9–2. The user also can identify whether the target result is inside of the range bounded by the upper and lower limit or outside through programming of the WCIO bit. In practice, this allows the comparator to look for A/D results that are above a number, below a number, inside of a range, or outside of a range. The state of the WCM flag can be expressed by the following Boolean equation:

WCM = WCIO ⊕ (WINHI < ADR9–2) ⊕ (WINLO < ADR9–2)

Figure 7–3 illustrates the ranges that can be examined using the window comparator.

WINDOW COMPARATOR OPERATION Figure 7–3

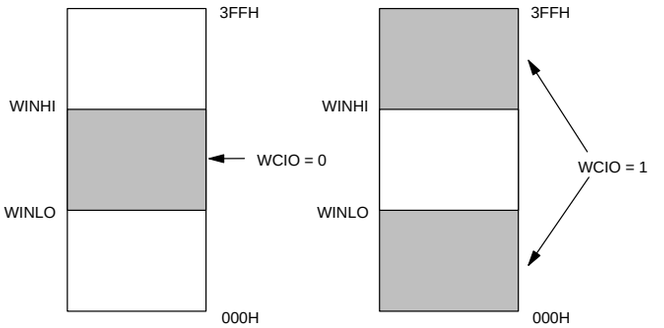

WINHI VALUE	WINLO VALUE	WCM (WCIO=0)	WCM (WCIO=1)	WINDOW STATUS
≥ADR9–2	≥ADR9–2	0	1	Outside
≥ADR9–2	<ADR9–2	1	0	Inside
<ADR9–2	≥ADR9–2	1	0	Inside
<ADR9–2	<ADR9–2	0	1	Outside

Note that there is no hardware significance to upper and lower designations. The upper comparison value can be selected as less than the lower comparison value, although doing so provides no additional function.

7.7 A/D OPERATION

Prior to initiating a conversion, software must select several parameters. First, the conversion channel must be selected. The next selection is whether this signal will be constantly monitored or simply converted once. Thus, software chooses continuous conversion or single shot. The window comparator can then be programmed to look for particular result ranges. The conversion time must be programmed using the prescale value. This is a function of the urgency of getting a result and the operating frequency. If interrupt operation is desired, the EAD bit (EIE.1) must be set.

At this time, the converter is ready to operate. Software may either begin a conversion by setting the start conversion bit, or enable the external start conversion pin. If enabled, a falling edge on the pin will start conversion. At this time, the A/D hardware will set the start/busy bit to a logic 1. Once a conversion has been started, it can only be interrupted by powering down the converter. An interval of 16 A/D clocks at the prescale frequency is used to time the conversion process. The selected input channel will be sampled by a sample and hold for five A/D clocks. Ten A/D clocks are used to perform the successive approximation conversion. On the final clock cycle, the hardware will set the EOC bit to a logic 1. If A/D interrupts are enabled via EAD, an interrupt condition will be generated every time that EOC is set to 1 when WCQ = 0. When WCQ = 1, an interrupt will be generated at the end of a conversion when EOC and WCM both are set to 1. In all cases EOC should be cleared to 0 by software after the result is read in order to clear the interrupt condition.

If continuous operation is selected, the A/D will then automatically restart the process on the next machine cycle after completing the conversion. Thus, in this case the busy flag appears to be set at all times. If the single shot mode is selected subsequent to operation in the continuous mode, single shot operation will take effect when the converter finishes the current conversion.

Power control of the A/D is a manual operation . The converter defaults to a power–down condition. If software disables power to the converter, it will require a period of t_{AD} to restart when software re–enables the power.

7.8 A/D SPECIAL FUNCTION REGISTERS

The following is a description of the Special Function Registers used to control the on–chip A/D converter.

7.8.1 ADCON1 – A/D Control Register 1

ADCON1; SFR ADDR.=0B2H

BIT 7	BIT 6	BIT 5	BIT 4	BIT 3	BIT 2	BIT 1	BIT 0
STRT/ BSY	EOC	CONT/ SS	ADEX	WCQ	WCM	ADON	WCIO

Read/Write Access: (Read at any time, See individual bit description for write operation)
Initialization: 00h on any type of reset

STRT/BSY – Start/Busy.
Setting this bit to a 1 from a 0 condition will initiate an A/D conversion. The bit will then remain set for the duration of the conversion, regardless of any attempt to write it to 0. Thus, the bit serves as a busy flag as well. When a conversion is complete, the A/D hardware will clear this bit to 0.

EOC – End of Conversion.
The A/D will set this bit to a 1 when a conversion is complete. EOC also serves the function of an interrupt flag which may be qualified via the WCQ bit described below.

CONT/SS – Continuous/Single Shot.
When set to a 1, the A/D will repeatedly run conversions without software intervention once a conversion is initiated. When cleared to a 0, the A/D will perform the requested conversion then halt. Setting the bit from a 1 to a 0 (taking it out of continuous mode) will cause the converter to halt when the current conversion is completed.

ADEX – A/D External Start.
When this bit is set to a 1, an A/D can be initiated by a falling edge detected on an external pin. When set to a 0, the external pin has no effect. When a pin is used to initiate a conversion, the A/D will write a 1 to the STRT/ BSY bit to indicate that a conversion has started. When ADEX = 1, the STRT bit can still be used.

WCQ – Window Comparator Qualifier.
Setting this bit to a 1 enables the window comparator qualifier function. When WCQ = 1, an interrupt can occur only when EOC and WCM are both set to a 1 at the end of a conversion. When cleared to a 0, an interrupt can result each time that EOC is set at the end of any conversion.

WCM – Window Comparator Match.
At the end of conversion, WCM is updated. WCM will be set when the window comparator detects an A/D result that matches the selected criteria. If the A/D result does not match the criteria for the window as specified in the WINHI and WINLO limit registers as well as the WCIO, WCM will not be set.

ADON – A/D ON.
Setting this bit to a 1 applies power to the analog circuit functions, and must be set in order to perform an A/D conversion. The A/D requires a warm up period of t_{AD} when setting this bit from a 0 to a 1 condition before a proper conversion can be performed. In order to assure a very low power STOP mode or to save power in other states, this bit should be cleared to 0. Clearing ADON to 0 will abort any conversion in progress and will reset STRT/BSY to a 0.

WCIO – Window Comparator Inside / Outside.
When set to a 1, the window comparator looks for A/D results that are outside of the window bounded by the WINHI and WINLO limits. When set to a 0, the comparator looks for A/D results that are inside of the window bounded by WINHI and WINLO.

7.8.2 ADCON2 – A/D Control Register 2

ADCON2; SFR ADDR.=0B3H

BIT 7	BIT 6	BIT 5	BIT 4	BIT 3	BIT 2	BIT 1	BIT 0
OUTCF	MUX2	MUX1	MUX0	APS3	APS2	APS1	APS0

Read/Write Access: Unrestricted.
Initialization: 00h on any type of reset

OUTCF – Output Conversion Format.
Selects whether the conversion output most–significant 8–bits or the most–significant 2–bits are presented in the A/D MSB register. When OUTCF = 1, the MSB register returns the upper 2 conversion bits, ADR8 and ADR9 in bit locations 0 and 1 respectively. When OUTCF = 0, the MSB register returns the upper 8 bits with result bit ADR9 located in bit position 7 and result bit ADR2 in bit position 0.

MUX2–0 – Multiplexor Select.
MUX2–0 select the A/D channel that will be sampled and converted when the next conversion is initiated. The table to the right shows the decoding.

MUX2	MUX1	MUX0	PIN	A/D CHANNEL
0	0	0	AI0	Channel 0
0	0	1	AI1	Channel 1
0	1	0	AI2	Channel 2
0	1	1	AI3	Channel 3
1	0	0	AI4	Channel 4
1	0	1	AI5	Channel 5
1	1	0	AI6	Channel 6
1	1	1	AI7	Channel 7

APS3–0 – A/D Clock Prescale Select.
APS3–0 are used to determine the prescale setting from the micro's CPU clock to the A/D converter. The CPU machine clock will be divided by the value of (N+1) where N is the 4–bit value represented by APS3–0.

7.8.3 ADMSB – A/D Result Most Significant Byte

ADMSB; SFR ADDR.=0B4H

BIT 7	BIT 6	BIT 5	BIT 4	BIT 3	BIT 2	BIT 1	BIT 0
ADR9/ 0	ADR8/ 0	ADR7/ 0	ADR6/ 0	ADR5/ 0	ADR4/ 0	ADR3/ ADR9	ADR2/ ADR8

Read/Write Access: Unrestricted.
Initialization: 00h on any type of reset

Depending on the programming of the OUTCF bit, this register contains either the most significant 8–bits or 2–bits of the conversion result. If OUTCF = 0 bits 7–0 contain bits 9–2, respectively, of the result. If OUTCF=1, bits 7–2 contain 0, and bits 1 and 0 contain result bits 9 and 8, respectively.

7.8.4 ADLSB – A/D Result Least Significant Byte

ADLSB; SFR ADDR.=0B5H

BIT 7	BIT 6	BIT 5	BIT 4	BIT 3	BIT 2	BIT 1	BIT 0
ADR7	ADR6	ADR5	ADR4	ADR3	ADR2	ADR1	ADR0

Read/Write Access: Unrestricted.
Initialization: 00h on any type of reset

ADLSB always returns the least significant 8–bits of the conversion result.

7.8.5 WINHI – A/D Window Comparator High Byte

WINHI; SFR ADDR.=0B6H

BIT 7	BIT 6	BIT 5	BIT 4	BIT 3	BIT 2	BIT 1	BIT 0

Read/Write Access: Unrestricted.
Initialization: 00h on any type of reset

Upper limit for the window comparator. These 8–bits are compared against the most significant 8–bits of the previous A/D result. A match of the desired magnitude causes the comparator to set the WCM flag. The match condition is selected by the WCIO bit in ADCON1.

7.8.6 WINLO – A/D Window Comparator Low Byte

WINLO; SFR ADDR.=0B7H

BIT 7	BIT 6	BIT 5	BIT 4	BIT 3	BIT 2	BIT 1	BIT 0

Read/Write Access: Unrestricted.
Initialization: 00h on any type of reset

Lower limit for the window comparator. These 8–bits are compared against the most significant 8–bits of the previous A/D result. A match of the desired magnitude causes the comparator to set the WCM flag. The match condition is selected by the WCIO bit in ADCON1.

8.0 ACTIVITY MONITOR/LED CONTROL

8.1 OVERVIEW

During periods of inactivity, varying levels of standby and suspend modes of operation can be initiated by the SEM. Inactivity can be detected by the SEM and then action can be taken to reduce the power consumption of the system and thereby conserve operating power.

Activity monitoring is performed by the special logic provided as an alternate function on all lines of Port 7. This alternate function allows any combination of the Port 7 pins to be configured as activity monitor inputs. In this mode, these pins are intended for connection to the chip select signals of external peripheral subsystems, such as the hard disk, floppy, etc. These pins can be optionally qualified by the $\overline{IOR}$ and $\overline{IOW}$ input control signals.

When inactivity is detected, peripheral devices such as the LCD display, hard disk, floppy disk, and modem are turned off as required by the microcontroller firmware. This is accomplished via parallel I/O pins as assigned by the user. When CPU accesses to memory or I/O locations which are connected to the activity monitor inputs are detected, accessed peripheral devices can be turned back on by the firmware. As an option, the host CPU can be notified of the power on sequence by writing a word to a power management host interface port, which activates either $\overline{SMI1}$ or $\overline{SMI2}$.

8.2 ACTIVITY MONITOR INPUT OPERATION

The activity monitor enable bits in the Activity Monitor Enable (AME–092H) register select the associated pins from Port 7 as activity monitor inputs. In order to function properly, each enabled pin must have a 1 programmed into its Port 7 output latch bit. The current state of the Port 7 pins can always be read through the Port 7 input buffer regardless of the programming of the activity monitor enable bits. Figure 8–1 shows the logic associated with each Activity Monitor Input.

The active state for each pin is programmed via the Activity Monitor Polarity register (AMP–094H). A “0” programmed into a bit in the AMP register selects a low state signal as active for the pin (default case) while a “1” selects a high state signal.

When an active state is detected on an enabled activity monitor pin, the associated bit in the Activity Monitor Flag (AMF–095H) will be set.

In order to avoid false triggering of the activity monitor inputs due to glitches from an external address decoder, the inputs can be optionally qualified by the $\overline{IOR}$ and $\overline{IOW}$ lines via the Activity Monitor Qualify register (AMQ–093H). When a bit is set to 1 in the AMQ register, the associated pin will not be active unless it is accompanied by a valid $\overline{IOR}$ or $\overline{IOW}$ signal. When AMQ bits are 0, the associated pins qualify function is disabled (default case).

Interrupts initiated from the enabled activity monitor pins are enabled by the EAM bit (IE.6), and their priority can be adjusted via PAM (IP.6). When activity monitor interrupts are enabled and an active state occurs, an interrupt will be generated, and the SEM firmware should read the AMF register to determine the source of the interrupt. The interrupt flag can be cleared by writing a “0” to the flag bit; writing a 1 will have no effect.

When all peripheral devices in the system are fully powered, host accesses to them may occur very often. So often in fact, that if these accesses were to initiate interrupts during this time the SEM may be bogged down in unnecessary interrupt service routines servicing the interrupts. Typically, it is necessary only to ascertain whether each monitored device has been accessed by the host over the past, say, 16–second period. In order to eliminate any unnecessary interrupt processing burden, it may be desirable to disable the interrupts from the activity monitor inputs (e.g., by clearing EAM) and reading the register once during each such period. This period can be easily set up via the Power Down Periodic Interrupt described below.

ACTIVITY MONITOR INPUTS Figure 8–1

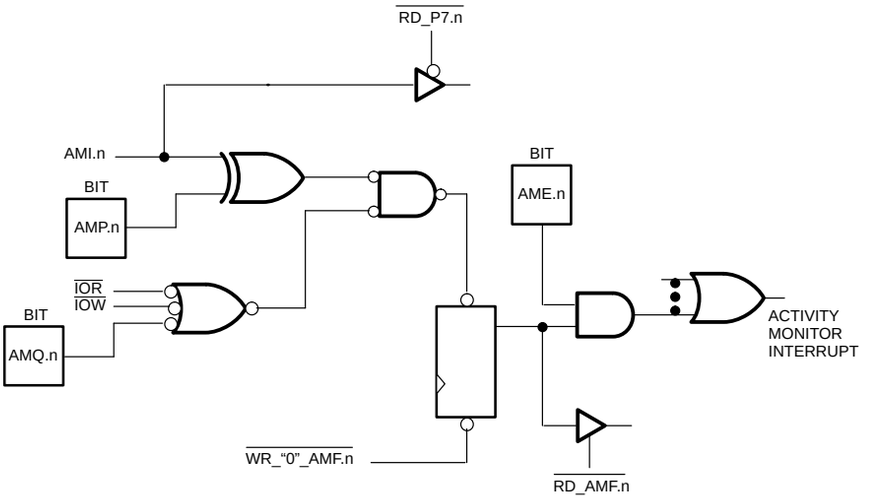

When one or more peripheral devices have been powered down due to inactivity, it may be desirable at that time to enable interrupts to at least those devices. When an access is attempted by the host, the SEM can take the appropriate action to apply power to the peripheral. During such time, the SEM can activate the $\overline{SMI}$1 or $\overline{SMI2}$ interrupt by writing to a power management host interface output buffer register with a status word reflecting the current condition.

8.3 AME – ACTIVITY MONITOR ENABLE REGISTER

AME; SFR ADDR.=092H

BIT 7	BIT 6	BIT 5	BIT 4	BIT 3	BIT 2	BIT 1	BIT 0
AME7	AME6	AME5	AME4	AME3	AME2	AME1	AME0

Read/Write Access: Unrestricted.
Initialization: 00h on any type of reset

When an AME bit is set to 1, it enables the corresponding line of Port 7 as an activity monitor interrupt source. An interrupt condition will exist when the associated activity monitor flag bit is set (see below). When AME is cleared to 0, the associated pin is disabled as an interrupt source. The associated Port 7 latch bit must be set to 1 when a pin is to be programmed as an activity monitor input.

8.4 AMQ – ACTIVITY MONITOR QUALIFIER REGISTER

AMQ; SFR ADDR.=093H

BIT 7	BIT 6	BIT 5	BIT 4	BIT 3	BIT 2	BIT 1	BIT 0
AMQ7	AMQ6	AMQ5	AMQ4	AMQ3	AMQ2	AMQ1	AMQ0

Read/Write Access: Unrestricted.
Initialization: 00h on any type of reset

When an AMQ bit is set to 1, the corresponding activity monitor input pin is qualified with $\overline{IOR}$ or $\overline{IOW}$. As a result, the corresponding AMF bit will not be set unless the programmed state on the AMI.n pin is accompanied with a valid $\overline{IOR}$ or $\overline{IOW}$ signal. This prevents false triggering of activity monitor inputs from chip select outputs due to address decoding glitches.

8.5 AMP – ACTIVITY MONITOR POLARITY REGISTER

AMP; SFR ADDR.=094H

BIT 7	BIT 6	BIT 5	BIT 4	BIT 3	BIT 2	BIT 1	BIT 0
AMP7	AMP6	AMP5	AMP4	AMP3	AMP2	AMP1	AMP0

Read/Write Access: Unrestricted.
Initialization: 00h on any type of reset

The bits in the AMP register are used to select the polarity of a valid state on the activity monitor input pins. When an AMP bit is set to 1, a high state is selected as valid on the corresponding AMI pin. When and AMP bit = 0, a low state is selected as valid.

8.6 AMF – ACTIVITY MONITOR FLAG REGISTER

AMF; SFR ADDR.=095H

BIT 7	BIT 6	BIT 5	BIT 4	BIT 3	BIT 2	BIT 1	BIT 0
AMF7	AMF6	AMF5	AMF4	AMF3	AMF2	AMF1	AMF0

Read/Write Access: Unrestricted.
Initialization: 00h on any type of reset

An AMF bit will be set whenever a valid state is detected on the associated AMI.n pin. A valid state is determined by the programming of the Activity Monitor Polarity register and the Activity Monitor Qualifier register, both described above. If the associated AME bit is set, the AMF bit is enabled as an interrupt source. An SEM interrupt will be recognized if the EAM is also set, enabling activity monitor interrupts. Upon receiving an activity monitor interrupt, the system should read the AMF register to determine the source of interrupt. An AMF bit can be cleared by writing it to a 0 to clear the interrupt source condition. Writing a 1 has no effect.

8.7 LED CONTROL

Part 7 can also be used to control LED's by turning them on or off. To turn on an LED, the Port 7.X bit must be programmed to a logic 0 allowing current to sink into the DS80CH11. To turn off an LED the Port 7.X but must be programmed to a logic 1, preventing any current flow through the LED circuit. Each Port 7 pin is capable of sinking 10mA of current. When using this port for LED control it is recommended that no more than 40mA of sink current be dissipated at a time into the DS80CH11.

9.0 HOST INTERFACE PORTS

9.1 OVERVIEW

The SEM provides three interface ports to the host CPU which are hardware–compatible with the interface to the 8042 keyboard controller IC as it is used in conventional PC system designs. One of the interface ports is intended to be assigned to the standard keyboard controller function. The host thereby communicates to the SEM as a slave microcontroller in receiving key scan inputs as it does with the 8042 in these systems. The other two ports can be assigned as communication channels to the SEM to support power management and/or other functions.

MICROCONTROLLER SYSTEM INTERFACE PORTS Figure 9–1

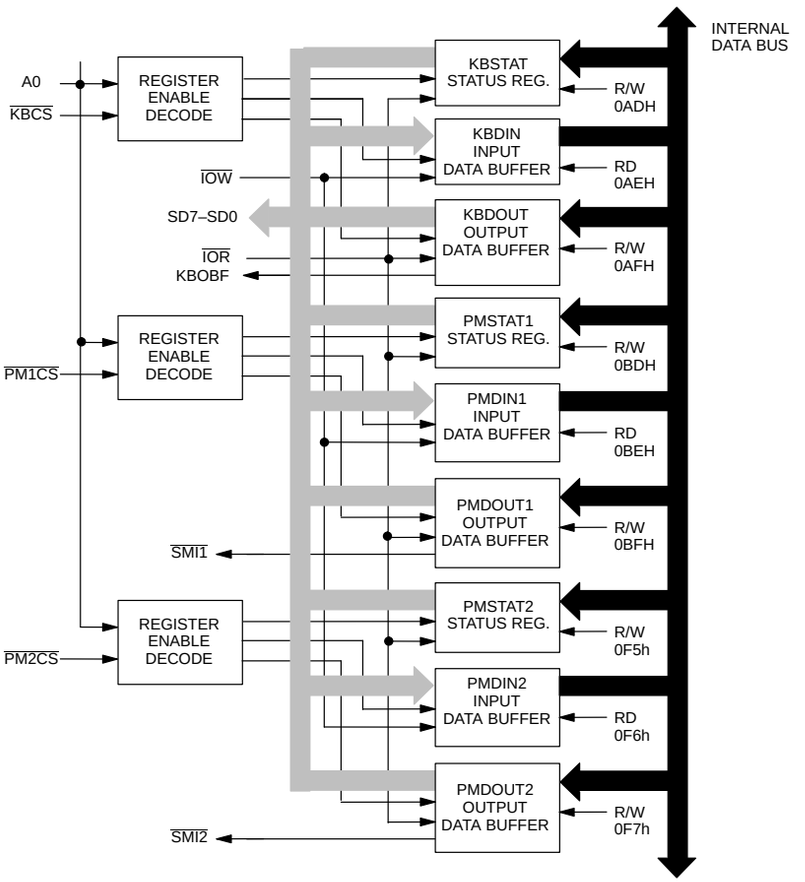

9.2 REGISTER MAPPING

The $\overline{KBCS}$ line is used by the host system in selecting the keyboard system interface port, while the $\overline{PM1CS}$ line selects the identical power management#1 interface port and the $\overline{PM2CS}$ line selects the power management #2 interface port. Each set of system interface registers occupy three memory locations in the SEM, and the host. Table 9–1 summarizes access of the three interface ports by the host system, and Table 9–2 summarizes access to the port registers by the SEM.

SYSTEM DATA TRANSFER SUMMARY Table 9–1

$\overline{KBCS}$	$\overline{PM1CS}$	$\overline{PM2CS}$	A0	$\overline{IOR}$	$\overline{IOW}$	REGISTER SELECTED	OPERATION
0	0	0	X	X	X	Undefined	Undefined
0	1	1	0	0	1	KBDOUT	Read Keyboard Data Out
0	1	1	1	0	1	KBSTAT	Read Keyboard Status
0	1	1	0	1	0	KBDIN	Write Keyboard Data In; Set KC/D = 0
0	1	1	1	1	0	KBDIN	Write Keyboard Command; Set KC/D = 1
1	0	1	0	0	1	PMDOUT1	Read Pwr. Mgr. #1 Data Out
1	0	1	1	0	1	PMSTAT1	Read Pwr. Mgr. #1 Status
1	0	1	0	1	0	PMDIN1	Write Pwr. Mgr. #1 Data In; Set PC/D1 = 0
1	0	1	1	1	0	PMDIN1	Write Pwr. Mgr. #1 Command; Set PC/D1 = 1
1	1	0	0	0	1	PMDOUT2	Read Pwr. Mgr. #2 Data Out
1	1	0	1	0	1	PMSTAT2	Read Pwr. Mgr. #2 Status
1	1	0	0	1	0	PMDIN2	Write Pwr. Mgr. #2 Data In; Set PC/D2 = 0
1	1	0	1	1	0	PMDIN2	Write Pwr. Mgr. #2 Command; Set PC/D2 = 1
1	1	1	X	X	X	None	System interface port disabled

SEM SYSTEM I/F REGISTER ACCESS SUMMARY Table 9–2

SFR ADDR.	REGISTER	READ/WRITE ACCESS
0ADH	KBSTAT	Read / Write (write on selected bits)
0AEH	KBDIN	Read Only
0AFH	KBDOUT	Read / Write
0BDH	PMSTAT1	Read / Write (write on selected bits)
0BEH	PMDIN1	Read Only
0BFH	PMDOUT1	Read / Write
0F5H	PMSTAT2	Read / Write (write on selected bits)
0F6H	PMDIN2	Read Only
0F7H	PMDOUT2	Read / Write

9.3 KBDIN / PMDIN1/PMDIN2 – DATA REGISTERS

KBDIN; SFR ADDR.=0AEH

BIT 7	BIT 6	BIT 5	BIT 4	BIT 3	BIT 2	BIT 1	BIT 0

PMDIN1; SFR ADDR.=0BEH

BIT 7	BIT 6	BIT 5	BIT 4	BIT 3	BIT 2	BIT 1	BIT 0

PMDIN2; SFR ADDR.=0F6H

BIT 7	BIT 6	BIT 5	BIT 4	BIT 3	BIT 2	BIT 1	BIT 0

Read/Write Access: Read only.
Initialization: Undefined on any type of reset

Each input data register (KBDIN, PMDIN1 or PMDIN2) is a read–only register to the SEM and a write–only register to the host. The associated input buffer full flag (KIBF, PIBF1 or PIBF2) will be set when the host CPU writes to one of the input buffers. The SEM can enable an “input buffer full” interrupt on any port by setting the associated interrupt enable bit (EKB, EPB1 or EPB2). Upon interrupt, the SEM’s firmware should check to see if the incoming byte is a command or data by reading the command/data flag, i.e., KC/D, PC/D1 or PC/D2, in the status register followed by a read of the input data register. The contents of the input data registers are unaffected by any type of reset.

9.4 KBSTAT / PMSTAT1/PMSTAT2 – STATUS REGISTERS

KBSTAT; SFR ADDR.=0ADH

BIT 7	BIT 6	BIT 5	BIT 4	BIT 3	BIT 2	BIT 1	BIT 0
KST7	KST6	KST5	KST4	KC/D	KST2	KIBF	KOBF

PMSTAT1; SFR ADDR.=0BDH

BIT 7	BIT 6	BIT 5	BIT 4	BIT 3	BIT 2	BIT 1	BIT 0
P1ST7	P1ST6	P1ST5	P1ST4	PC/D1	P1ST2	PIBF1	POBF1

PMSTAT2; SFR ADDR.=0F5H

BIT 7	BIT 6	BIT 5	BIT 4	BIT 3	BIT 2	BIT 1	BIT 0
P2ST7	P2ST6	P2ST5	P2ST4	PC/D2	P2ST2	PIBF2	POBF2

Read/Write Access: Unrestricted.
Initialization: XXXXXX00B on any type of reset

The operation of the bits in the status registers of both ports are summarized below:

KST7–KST4, KST2/P1ST7–4, P1ST2, P2ST7–4, P2ST2–Keyboard / Power Mgr. #1 and #2 Status.

KST7–4, KST2, P1ST7–4, P1ST2, P2ST7–4, P2ST2 bits are RAM locations which can be used to communicate user–defined status conditions to the host system. They are read/write by the microcontroller and read–only by the host CPU. The KST7–4 bits are traditionally used by the keyboard control firmware for parity error, receive timeout, transmit timeout, and inhibit switch status. All of these bits are unaffected by any type of reset.

KC/D / PC/D1/PC/D2 – Keyboard / Power Mgr.#1 and #2 Command / Data.

KC/D and PC/D1 and PC/D2 each specify whether the associated input data register contains data or a command (0 = data, 1 = command). During a host write operation, the associated C/D bit will be set to a 1 if A0 = 1 or will be cleared to 0 if A0 = 0. KC/D, PC/D1 and PC/D2 are read–only status bits to both the SEM and the host CPU. They cannot be written directly, they only can be written as a result of the host write operation described above. All of these bits are unaffected by any type of reset.

KIBF / PIBF1/PIBF2 – Keyboard / Power Mgr. #1 and #2 Input Buffer Full.

The KIBF, PIBF1 or PIBF2 flag is set to 1 whenever the host system writes data into the associated input data register. These flags also serve as interrupt pending flags. A Keyboard Buffer Interrupt (KBI) will be generated if the Keyboard Buffer Interrupt Enable (EKB) bit is set. Likewise, a Power Management #1 Buffer Interrupt (PBI1) will be generated if the Power Management #1 Buffer Interrupt Enable (EPB1) is set and a power management #2 Buffer Interrupt (PBI2) will be generated if the Power Management #2 Buffer Interrupt Enable (EPB2) is set. All of these bits are automatically cleared to 0 following a read of the associated input data registers. In addition, all bits are cleared to 0 following any type of reset.

KOBF / POBF1/POBF2 – Keyboard / Power Mgr. #1 and #2 Output Buffer Full.

KOBF, POBF1 and POBF2 are read–only status bits which are set to 1 when the associated output data buffer register is written by the SEM. Each of these bits are automatically cleared to 0 when the host system reads the associated output data registers. When the KOBF flag is set, an active high interrupt signal to the host will be generated through the KBOBF pin and will remain active until the output buffer is read by the host. Similarly, when POBF1 flag is set, an active low interrupt signal will be issued to the host via the $\overline{SMI1}$ pin and when POBF2 flag is set, an active low interrupt signal will be issued to the host via the $\overline{SMI2}$ pin. There are no output buffer–related interrupts to the SEM. All of these bits are cleared to 0 following any type of reset.

9.5 KBDOUT / PMDOUT1/PMDOUT2 – OUTPUT DATA REGISTERS

KBDOUT; SFR ADDR.=0AFH

BIT 7	BIT 6	BIT 5	BIT 4	BIT 3	BIT 2	BIT 1	BIT 0

PMDOUT1; SFR ADDR.=0BFH

BIT 7	BIT 6	BIT 5	BIT 4	BIT 3	BIT 2	BIT 1	BIT 0

PMDOUT2; SFR ADDR.=0F7H

BIT 7	BIT 6	BIT 5	BIT 4	BIT 3	BIT 2	BIT 1	BIT 0

Read/Write Access: Unrestricted.
Initialization: Undefined on any type of reset

The output data registers can be read or written by the SEM but are read only to the host When the SEM writes to one of the output data registers, the associated output buffer full flag will be set to alert the host that the output data is available.

The contents of the output data registers are unaffected by any type of reset.

10.0 KEYBOARD SCANNING PORTS

10.1 OVERVIEW

Three 8–bit I/O ports are provided which can be used for key matrix scan line outputs and inputs. Ports 8 and 9 are intended for scan line outputs, while port 4 is intended for scan line inputs.

10.2 KEY SCAN OUTPUTS

Ports 8 and 9 together provide 16 open–drain lines which are intended for use as key scan outputs. These lines are logically accessed and operated as normal pseudo–bi–directional I/O port pins. As a result, lines which are not required for the key scan function can be used as general purpose I/O for the control of other functions.

10.3 KEY SCAN INPUTS

Port 4 is a parallel I/O port which is logically and electrically tailored for keyboard matrix scan inputs. All of the port 4 pins are Schmitt triggered inputs and are internally pulled high by a resistor. In addition, all pins are capable of generating an interrupt on a low–going transition. As a result, the SEM can initiate a keyboard scan only when a key is pressed instead of doing it periodically. Thus, battery drain is minimized.

In order to use a Port 4 pin as a key scan input, its output latch bit in the Port 4 SFR register must be first written to a 1, which configures the pin as an input. Negative transition detection on each pin is enabled by setting the matching KDEn enable bit in the Keyboard Detect Enable Register to a 1. Then, when a negative transition occurs on an enabled input, the corresponding interrupt flag bit will be set in the Keyboard Detect Flag Register. If the Key Detect Interrupt Enable bit is set (EKD; register EIE.5), a keyboard interrupt will then be recognized by the SEM core. Upon interrupt, the system should scan the keyboard matrix via other output ports (typically ports 8 and 9) to identify the location of the pressed key. The set keyboard interrupt flag bits should be cleared by firmware to clear the interrupt condition before exiting the interrupt service routine.

10.4 KDE – KEY DETECT ENABLE REGISTER

KDE; SFR ADDR.=0A5H

BIT 7	BIT 6	BIT 5	BIT 4	BIT 3	BIT 2	BIT 1	BIT 0
KDE7	KDE6	KDE5	KDE4	KDE3	KDE2	KDE1	KDE0

Read/Write Access: Unrestricted.
Initialization: Undefined on any type of reset

KDE7–KDE0 – Key Detect Enable Bits

When a KDEn enable bit is set, it enables negative–edge transition detection on the corresponding line of port 4. When a KDEn bit is cleared no transition detection is performed on the corresponding line.

10.5 KDF – KEYBOARD DETECT FLAG REGISTER

KDF; SFR ADDR.=0A6H

BIT 7	BIT 6	BIT 5	BIT 4	BIT 3	BIT 2	BIT 1	BIT 0
KDF7	KDF6	KDF5	KDF4	KDF3	KDF2	KDF1	KDF0

Read/Write Access: Unrestricted read; all bits write only to 0.
Initialization: 00H on any type of reset

KDFn are flag bits for the keyboard activity detection. If a port 4–pin has its KDEn bit set, the corresponding KDFn is set when an negative edge is detected on that pin. An SEM interrupt will be recognized if the KDEn bit is set and the interrupts are enabled. Upon receipt of the interrupt, the system should read this register to determine on which scan line the key closure occurred. The firmware can then scan the keyboard matrix using Ports 8 and 9 as outputs to identify the location of the depressed key. In order to clear the interrupt condition, the firmware should clear the interrupting KDF bit(s) by writing 00H to the KDF register prior to exiting the interrupt service routine.

11.0 PULSE WIDTH MODULATORS

11.1 FUNCTIONAL OVERVIEW

The SEM includes four independent timer channels which can generate pulse–width modulated outputs. All four pulse width modulator channels incorporate a clock selector which generates an independent clock source for each channel. As a result, an independent clock frequency can be selected for each pulse width modulator. Each pulse width modulator is capable of generating a waveform which has a programmable duty cycle of n/256% where 0<n<255. Figure 11–1 is a block diagram illustrating the four–channel pulse width modulator function.

PWM BLOCK DIAGRAM Figure 11–1

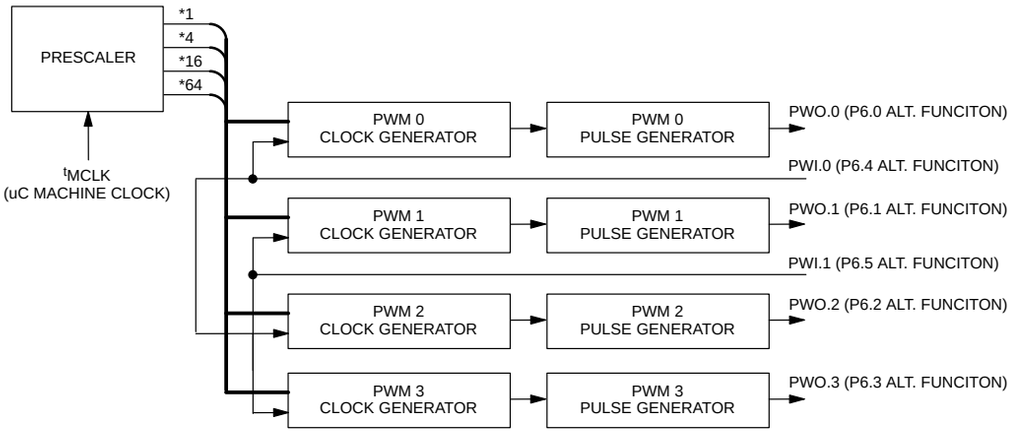

11.2 PRESCALER

This block creates and distributes four clock outputs which are supplied to the clock selectors. The prescaler takes the microcontroller machine clock and divides it to produce reduced speed frequencies. The CPU machine clock period (t_{MCLK}) is the oscillator clock period (t_{CLK}) multiplied times 4, 64, or 1024 as determined by the programming of the system clock divider bits (CD1, CD0) in the PMR register. The prescaler provides four frequencies: t_{MCLK} *1, t_{MCLK} *4, t_{MCLK} *16, t_{MCLK} *64. These frequencies are free running and are not specifically enabled or selected. They are simultaneously available to the four PWM clock selectors as described below.

11.3 PWM CLOCK GENERATORS

Within the PWM function there are four identical but separate clock generators for each of the four independent PWM channels. The clock generator function is illustrated in Figure 11–2. All four clock generators accept the four prescaler clock outputs and an external pin as inputs. PWI.0 may be selected as the clock generator input for PWM channels 0 and 2, and PWI.1 may be selected as the clock generator input for channels 1 and 3. If PWI.1 or PWI.0 are to be selected as the clock input source, then associated port bit latch (P6.5 or P6.4) must be programmed as an input (set to 1) in order to enable the alternate function of these pins. If selected, PWI.1 and PWI.0 will be sampled and synchronized to internal microcontroller timing as with other 8051 compatible timer inputs.

Thus, for all clock generators there are five choices for the input clock source, which is used to drive an 8–bit auto–reloadable counter. This counter output provides a divide by N+1 selectable frequency for the PWM channel, where N is the value programmed into the counter register. When a value of 00H is programmed into the counter the input clock frequency will be passed through as the clock output to the channel's pulse generator. A value of 0FFH will result in the clock input being divided by 256 and output to the pulse generator.

PWM CHANNEL CLOCK GENERATOR (1 OF 4) Figure 11–2

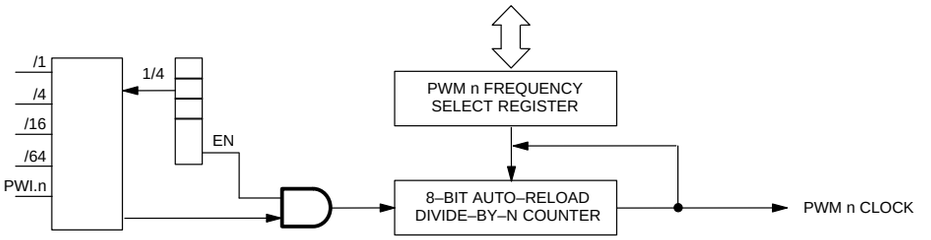

11.4 PWM PULSE GENERATORS

Figure 11–3 illustrates the pulse generators for each of the four PWM channels. Each pulse generator has an 8–bit free running timer which accepts a clock input from the associated PWM clock generator. The timer value is compared to zero and to a user selectable value. Each time that the timer value reaches zero (once every 256 clocks), the zero comparator sets a flip–flop. When the timer reaches the user–selected PWM match value, this comparator clears the flip–flop. The user–selected PWM value thereby determines the PWM duty cycle.

If the channel's associated output enable bit is set (PWnOE), the output of this flip–flop is driven on the associated port 6 pin. Note that when the output enable bit is set, a full complementary push–pull driver is enabled on the corresponding pin, replacing the weak–p pull–up. When the PWnOE bit is set, the associated general purpose port bit function is logically disconnected from the pin.

The zero rollover condition will cause an "interrupt" flag to be set for the associated channel. However, there is no interrupt vector in the SEM which is dedicated to any PWM channel's flag. As a result, the flag is useful only for polling purposes.

The PWM compare value can be read from or written to the PWM n SFR with the PWnT/C bit for the pair of PWM channel's cleared to 0. The PWM channel timer value can be accessed via the PWM n SFR register with the PWnT/C bit set to 1. The PWM value will be transferred from the SFR to the comparator after the next match occurs. Thus a selection value can be changed once per 256 clocks. This prevents software from creating glitches on the PWM pin. The comparator match flag indicates when a match occurs and consequently when the new value has been updated. At this time, software can change the duty cycle if desired for update on the next cycle.

A PWM value of 00h will create a PWM output that is always zero. This is deglitched to prevent a simultaneous set and reset. A PWM value of FFh will create a waveform that is high for 255 of 256 clocks. A DC override bit is provided for each channel which forces a constant "1" state on the PWM output.

All PWM functions described above are duplicated for all four PWM channels. For each, there is a single value SFR used to access the channel's Timer value and a PWM value registers, a timer/compare select bit, an output enable bit, a DC override bit, and a rollover flag bit.

PWM CHANNEL BLOCK DIAGRAM Figure 11–3

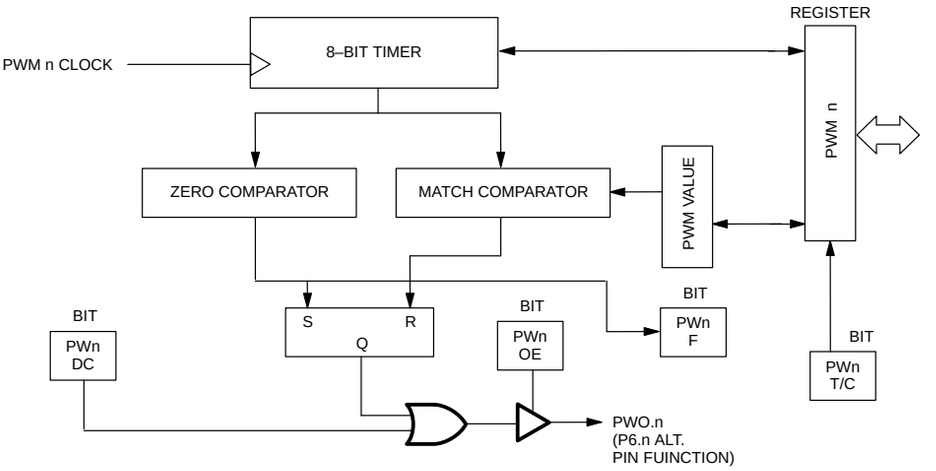

11.5 PWM SPECIAL FUNCTION REGISTERS

A total of 12 SFR's are used to control the four PWM channels. The operation of these registers are summarized below:

11.5.1 PW01CS / PW23CS – PWM 0, 1 / PWM 2, 3 Clock Select Registers

PW01CS; SFR ADDR.=0D5H

BIT 7	BIT 6	BIT 5	BIT 4	BIT 3	BIT 2	BIT 1	BIT 0
PW0S2	PW0S1	PW0S0	PW0EN	PW1S2	PW1S1	PW1S0	PW1EN

PW23CS; SFR ADDR.=0E5H

BIT 7	BIT 6	BIT 5	BIT 4	BIT 3	BIT 2	BIT 1	BIT 0
PW2S2	PW2S1	PW2S0	PW2EN	PW3S2	PW3S1	PW3S0	PW3EN

Read/Write Access: Unrestricted.
Initialization: 00H on any type of reset

PWnS2–0 – PWM n Clock Select Bits.
These three bits select one of four prescale frequencies or an external pin as the input to the PWM n frequency generator, which is then used as the clock source for PWM channel n. The bit selections operate as follows:

PWnS2	PWnS1	PWnS0	PWM n CLOCK FREQ.
0	0	0	t_{MCLK}* 1
0	0	1	t_{MCLK}* 4
0	1	0	t_{MCLK}* 16
0	1	1	t_{MCLK}* 64
1	X	X	PWI.n pin*

*Note: For channels 0 and 2, this selection assigns PWI.0 as the input clock source. For channels 1 and 3, this selection assigns PWI.1 as the input clock source.

PWnEN – PWM n Frequency Generator Enable.
Enables the frequency generator for PWM n. When PWnEN = 1, the frequency generator operates from the clock selected by PWnS2–0. When PWnEN = 0, no clock is generated.

11.5.2 PW01CON / PW23CON – PWM 0, 1 / PWM 2, 3 Control Register

PW01CON; SFR ADDR.=0DDH

BIT 7	BIT 6	BIT 5	BIT 4	BIT 3	BIT 2	BIT 1	BIT 0
PW0 F	PW0 DC	PW0 OE	PW0 T/C	PW1 F	PW1 DC	PW1 OE	PW1 T/C

PW23CON; SFR ADDR.=0EDH

BIT 7	BIT 6	BIT 5	BIT 4	BIT 3	BIT 2	BIT 1	BIT 0
PW2 F	PW2 DC	PW2 OE	PW2 T/C	PW3 F	PW3 DC	PW3 OE	PW3 T/C

Read/Write Access: Unrestricted.
Initialization: 00H on any type of reset

PWnF – PWM n Flag.
Indicates that the PWM n timer has rolled over to a zero after a total of 256 counts. This bit must be cleared by software to remove the flagged condition.

PWnDC – PWM n D. C. Override.
Setting this bit to a 1 forces the PWMn output to a 1 regardless of the PWM match value.

PWnOE – PWM n Output Enable.
When set to a 1, PWnOE enables the PWM channel's output on the associated port pin. The port pin's normal psuedo–bi–directional function is switched over to a full complementary push–pull output drive. When cleared to 0, the PWM function is disconnected, and the normal port pin function is restored.

PWnT/C – PWM n Timer / Compare Value Select.
PWnT/C controls whether the read/write access of the PWM channel's value register results in access of the timer or the compare values. When PWnT/C = 1, the Timer values are accessed via the PWM n SFR. When PWnT/C = 0, the Compare values are accessed via the PWM n SFR.

11.5.3 PWnFG – PWM n Frequency Generator Registers

PW0FG; SFR ADDR.=0D6H

BIT 7	BIT 6	BIT 5	BIT 4	BIT 3	BIT 2	BIT 1	BIT 0

PW1FG; SFR ADDR.=0D7H

BIT 7	BIT 6	BIT 5	BIT 4	BIT 3	BIT 2	BIT 1	BIT 0

PW2FG; SFR ADDR.=0E6H

BIT 7	BIT 6	BIT 5	BIT 4	BIT 3	BIT 2	BIT 1	BIT 0

PW3FG; SFR ADDR.=0E7H

BIT 7	BIT 6	BIT 5	BIT 4	BIT 3	BIT 2	BIT 1	BIT 0

Read/Write Access: Unrestricted.
Initialization: 00H on any type of reset

The PWM channel n operating frequency is derived from the frequency selected by PWnS2–0 (described above) divided by the value of (PWnFG) + 1. Thus if (PWnFG) = 0, divisor is 1, (PWnFG) = 1, divisor = 2, (PWnFG) = 2, divisor = 3, etc. This value is the reload value for the frequency generator's 8–bit auto–reload-able timer. The timer's sole purpose is to generate the clocking frequency for PWM n and is not otherwise accessible. The PWM frequency will be correct after one reload has occurred.

11.5.4 PWMn – PWM n Value Registers

PWM0; SFR ADDR.=0DEH

BIT 7	BIT 6	BIT 5	BIT 4	BIT 3	BIT 2	BIT 1	BIT 0

PWM1; SFR ADDR.=0DFH

BIT 7	BIT 6	BIT 5	BIT 4	BIT 3	BIT 2	BIT 1	BIT 0

PWM2; SFR ADDR.=0EEH

BIT 7	BIT 6	BIT 5	BIT 4	BIT 3	BIT 2	BIT 1	BIT 0

PWM3; SFR ADDR.=0EFH

BIT 7	BIT 6	BIT 5	BIT 4	BIT 3	BIT 2	BIT 1	BIT 0

Read/Write Access: Unrestricted.
Initialization: 00H on any type of reset

Used to access the PWM n timer and the PWM n compare values that selects the PWM duty cycle. This register provides read/write access to both. The selection of the active function is controlled by the PWnT/C bit. When PWnT/C = 0, then PWM n register accesses the PWM compare value. Writing a new value to PWM n will then select a new duty cycle. The new value will be loaded from the register into the PWM comparator when the timer reaches the previous PWM compare value. When PWnT/C = 1, the register accesses the PWM n timer value. This allows software to monitor the progress through the duty cycle or to use PWM channel n as an 8–bit timer.

12.0 MICROCONTROLLER POWER MANAGEMENT

12.1 POWER–DOWN / POWER–UP OPERATION

The SEM incorporates a complete on–chip power monitoring and control function which performs the following tasks:

- Power Fail Reset generation
- Power Fail Warning interrupt

12.1.1 Microcontroller Power Fail Reset

The SEM incorporates a precision band–gap voltage reference and internal monitoring circuit to determine if VCC is out of tolerance. The power fail reset feature operates completely without the need for external components.

During a power up or power down condition, the SEM's CPU and its I/O circuitry are held in a reset state for the entire time that VCC is below the VRST threshold. In addition, the $\overline{\text{VRST}}$ pin is held low so that the rest of the system can be held in a reset state during this time.

When VCC rises above the VRST level during a power up condition, the internal monitor circuit manages a restart of the SEM's microcontroller as follows: First, the crystal oscillator is enabled and a delay of 65536 CPU clock cycles is executed in order to allow time for the microcontroller clock oscillator to stabilize. Then, the $\overline{\text{VRST}}$ pin is taken inactive and the microcontroller core is released from the reset state and begins code execution at the reset vector location (0000h). Software can then determine that a power–on reset has occurred by reading the Power On Reset flag (WDCON.6) which will be set to a 1. The software should clear the POR flag after reading it so that the next reset source can be properly determined.

12.2 LOW POWER OPERATING MODES

Along with the standard IDLE and power down (STOP) modes of the standard 80C52, the SEM provides the Slow Clock mode. This mode allows the processor to continue functioning, yet save power compared with full operation mode. The SEM also features several enhancements to STOP mode that make it more useful.

12.2.1 Slow Clock Mode

The Slow Clock Mode offers a complete scheme of reduced internal clock speeds that allow the CPU to continue to run software but to use substantially less power. During default operation, the SEM uses 4 clocks per machine cycle. Thus the instruction cycle rate is Clock / 4. At 25 MHz crystal speed, the instruction cycle speed is 6.25 MHz (25/4). In Slow Clock Mode, the microcontroller continues to operate but uses an internally divided version of the clock source. This creates a lower power state without external components. It offers a choice of two reduced instruction cycle speeds (and two clock sources – discussed below). The speeds are (Clock / 64) and (Clock / 1024).

The microcontroller firmware is the only mechanism that can invoke the Slow Clock Mode. Table 12–1 illustrates the instruction cycle rate in Slow Clock Mode for several common crystal frequencies. Since power consumption is a direct function of operating speed, Slow Clock Mode (/ 64) eliminates most of the power consumption while still allowing a reasonable speed of processing. Slow Clock Mode (/ 1024) runs very slow and provides the lowest power consumption without stopping the CPU. This is illustrated in Table 12–2.

Note that Slow Clock Mode provides a lower power condition than IDLE mode. This is because in IDLE, all clocked functions such as timers run at a rate of crystal divided by 4. Since wake–up from Slow Clock Mode is as fast as or faster than from IDLE and Slow Clock Mode allows the CPU to operate (even if doing NOPs), there is little reason to use IDLE in new designs.

SLOW CLOCK MODE INSTRUCTION CYCLE RATE Table 12–1

CRYSTAL SPEED	FULL SPEED (4 CLOCKS)	SLOW CLOCK (64 CLOCKS)	SLOW CLOCK (1024 CLOCKS)
1.8432 MHz	460.8 KHz	28.8 KHz	1.8 KHz
11.0592 MHz	2.765 MHz	172.8 KHz	10.8 KHz
22 MHz	5.53 MHz	345.6 KHz	21.6 KHz
25 MHz	6.25 MHz	390.6 KHz	24.4 KHz

SLOW CLOCK MODE OPERATING CURRENT ESTIMATES Table 12–2

CRYSTAL SPEED	FULL SPEED (4 CLOCKS)	SLOW CLOCK (64 CLOCKS)	SLOW CLOCK (1024 CLOCKS)
1.8432 MHz	3.1 mA	1.2 mA	1.0 mA
3.57 MHz	5.3 mA	1.6 mA	1.1 mA
11.0592 MHz	15.5 mA	4.8 mA	4.0 mA
16 MHz	21 mA	7.1 mA	6.0 mA
22 MHz	25.5 mA	8.3 mA	6.5 mA
25 MHz	31 mA	9.7 mA	8.0 mA

12.2.1.1 Crystaless Slow Clock Mode

A major component of power consumption in Slow Clock Mode is the crystal amplifier circuit. The SEM allows the user the option to switch CPU operation to an internal ring oscillator and turn off the crystal amplifier. The CPU would then have a clock source of approximately 4 MHz, divided by either 4, 64, or 1024. The ring oscillator as a time base is not precise and as a result software can not perform precision timing. However, this mode allows an additional saving of between 0.5 and 6.0 mA depending on the actual crystal frequency. While this saving is of little use when running at 4 clocks per instruction cycle, it makes a major contribution when running in Slow Clock Mode.

12.2.1.2 Slow Clock Mode Operation

Software invokes the Slow Clock Mode by setting the appropriate bits in the SFR area. The basic choices are divider speed and clock source. There are three speeds (4, 64, 1024) and two clock sources (crystal, ring). Both the decisions and the controls are separate. Software will typically select the clock speed first. Then, it will perform the switch to ring operation if desired. Lastly, software can disable the crystal amplifier if desired.

There are two ways of exiting Slow Clock Mode. Software can remove the condition by reversing the procedure that invoked Slow Clock Mode or hardware can (optionally) remove it. To resume operation at a divide by 4 rate under software control, simply select 4 clocks per cycle, then crystal based operation if relevant. When disabling the crystal as the time base in favor of the ring oscillator, there are timing restrictions associated with restarting the crystal operation. Details are described below.

There are three registers containing bits that are concerned with Slow Clock Mode functions. They are Power Management Register (PMR; C4h), Status (STATUS; C5h), and External Interrupt Flag (EXIF; 91h)

12.2.1.3 Clock Divider

Software can select the instruction cycle rate by selecting bits CD1 (PMR.7) and CD0 (PMR.6) as follows:

CD1	CD0	Cycle rate
0	0	Reserved
0	1	4 clocks (default)
1	0	64 clocks
1	1	1024 clocks

The selection of instruction cycle rate will take effect after a delay of one instruction cycle. Note that the clock divider choice applies to all functions including timers. Since baud rates are altered, it will be difficult to conduct serial communication while in Slow Clock Mode. There

are minor restrictions on accessing the clock selection bits. The processor must be running in a 4 clock state to select either 64 (Slow Clock Mode1) or 1024 (Slow Clock Mode2) clocks. This means software cannot go directly from divide–by–64 to divide–by–1024 or vise versa. It must return to a 4 clock rate first.

12.2.1.4 Switchback

To return to a 4 clock rate from Slow Clock Mode, software can simply select the CD1 & CD0 clock control bits to the 4 clocks per cycle state. However, the SEM provides several hardware alternatives for automatic Switchback. If Switchback is enabled, then the SEM will automatically return to a 4 clock per cycle speed when an interrupt occurs from an enabled, valid external interrupt source. A Switchback will also occur when the serial port detects the beginning of a serial start bit if the serial receiver is enabled. Note the beginning of a start bit does not generate an interrupt; this occurs on reception of a complete serial word. The automatic Switchback on detection of a start bit allows hardware to correct baud rates in time for a proper serial reception.

Switchback is enabled by setting the SWB bit (PMR.5) to a 1 in software. For an external interrupt, Switchback will occur only if the interrupt source could really generate the interrupt. For example, if $\overline{\text{INT0}}$ is enabled but has a low priority setting, then Switchback will not occur on $\overline{\text{INT0}}$ if the CPU is servicing a high priority interrupt. A serial Switchback will occur only if the serial receiver function is enabled (REN=1, SCON0.4).

When SWB = 1, the user software will not be able to select a reduced clock mode if the UART is active. For example, the processor will prohibit the Slow Clock Mode by not allowing a write to CD1 and CD0 if a serial start bit arrived and SWB = 1. Since the reception of a serial start bit or an interrupt priority lockout is normally undetectable by software in an 8051, the Status register features several new flags that are useful. These are described below.

12.2.1.5 Status

Information in the Status register assists decisions about switching into Slow Clock Mode. This register contains information about the level of active interrupts and the activity on the serial ports.

The SEM supports three levels of interrupt priority. These levels are Power–fail, High, and Low. Bits STATUS.7–5 indicate the service status of each level. If PIP (Power–fail Interrupt Priority; STATUS.7) is a 1, then the processor is servicing this level. If either HIP (High Interrupt Priority; STATUS.6) or LIP (Low Interrupt Priority; STATUS.5) is high, then the corresponding level is in service.

Software should not rely on a lower priority level interrupt source to remove Slow Clock Mode (Switchback) when a higher level is in service. Check the current priority service level before entering Slow Clock Mode. If the current service level locks out a desired Switchback source, then it would be advisable to wait until this condition clears before entering Slow Clock Mode.

Alternately, software can prevent an undesired exit from Slow Clock Mode by entering a low priority interrupt service level before entering Slow Clock Mode. This will prevent other low priority interrupts from causing a Switchback.

Status also contains information about the state of the serial port. Serial Port Zero Receive Activity (SPRA0; STATUS.0) indicates a serial word is being received on Serial Port 0 when this bit is set to a 1. Serial Port Zero Transmit Activity (SPTA0; STATUS.1) indicates that the serial port is still shifting out a serial transmission. While one of these bits is set, hardware prohibits software from entering Slow Clock Mode (CD1 & CD0 are write protected) since this would corrupt the corresponding serial transmissions.

12.2.1.6 Crystal / Ring Operation

The SEM allows software to choose the clock source as an independent selection from the instruction cycle rate. The user can select crystal–based or ring oscillator–based operation under software control. Power–on reset default is the crystal (or external clock) source. The ring may save power depending on the actual crystal speed. To save still more power, software can then disable the crystal amplifier. This process requires two steps. Reversing the process also requires two steps.

The XT/$\overline{\text{RG}}$ bit (EXIF.3) selects the crystal or ring as the clock source. Setting XT/$\overline{\text{RG}}$ = 1 selects the crystal. Setting XT/$\overline{\text{RG}}$ = 0 selects the ring. The RGMD (EXIF.2) bit serves as a status bit by indicating the active clock source. RGMD = 0 indicates the CPU is running from the crystal. RGMD = 1 indicates it is running from the ring. When operating from the ring, disable the crystal

amplifier by setting the XTOFF bit (PMR.3) to a 1. This can only be done when XT/$\overline{RG}$ = 0.

When changing the clock source, the selection will take effect after a one instruction cycle delay. This applies to changes from crystal to ring and vise versa. However, this assumes that the crystal amplifier is running. In most cases, when the ring is active, software previously disabled the crystal to save power. If ring operation is being used and the system must switch to crystal operation, the crystal must first be enabled. Set the XTOFF bit to a 0. At this time, the crystal oscillation will begin. The SEM then provides a warm–up delay to make certain that the frequency is stable. Hardware will set the XTUP bit (STATUS.4) to a 1 when the crystal is ready for use. Then software should write XT/$\overline{RG}$ to a 1 to begin operating from the crystal. Hardware prevents writing XT/RG to a 1 before XTUP = 1. The delay between XTOFF = 0 and XTUP = 1 will be 65,536 crystal clocks.

Switchback has no effect on the clock source. If software selects a reduced clock divider and enables the ring, a Switchback will only restore the divider speed. The ring will remain as the time base until altered by software. If there is serial activity, Switchback usually occurs with enough time to create proper baud rates. This is not true if the crystal is off and the CPU is running from the ring. If sending a serial character that wakes the system from crystaless Slow Clock Mode, then it should be a dummy character of no importance with a subsequent delay for crystal startup.

The flow chart in Figure 12–1 illustrates a typical decision set associated with Slow Clock Mode.

Table 12–3 is a summary of the bits relating to Slow Clock Mode and its operation.

ENTERING / EXITING SLOW CLOCK MODE Figure 12–1

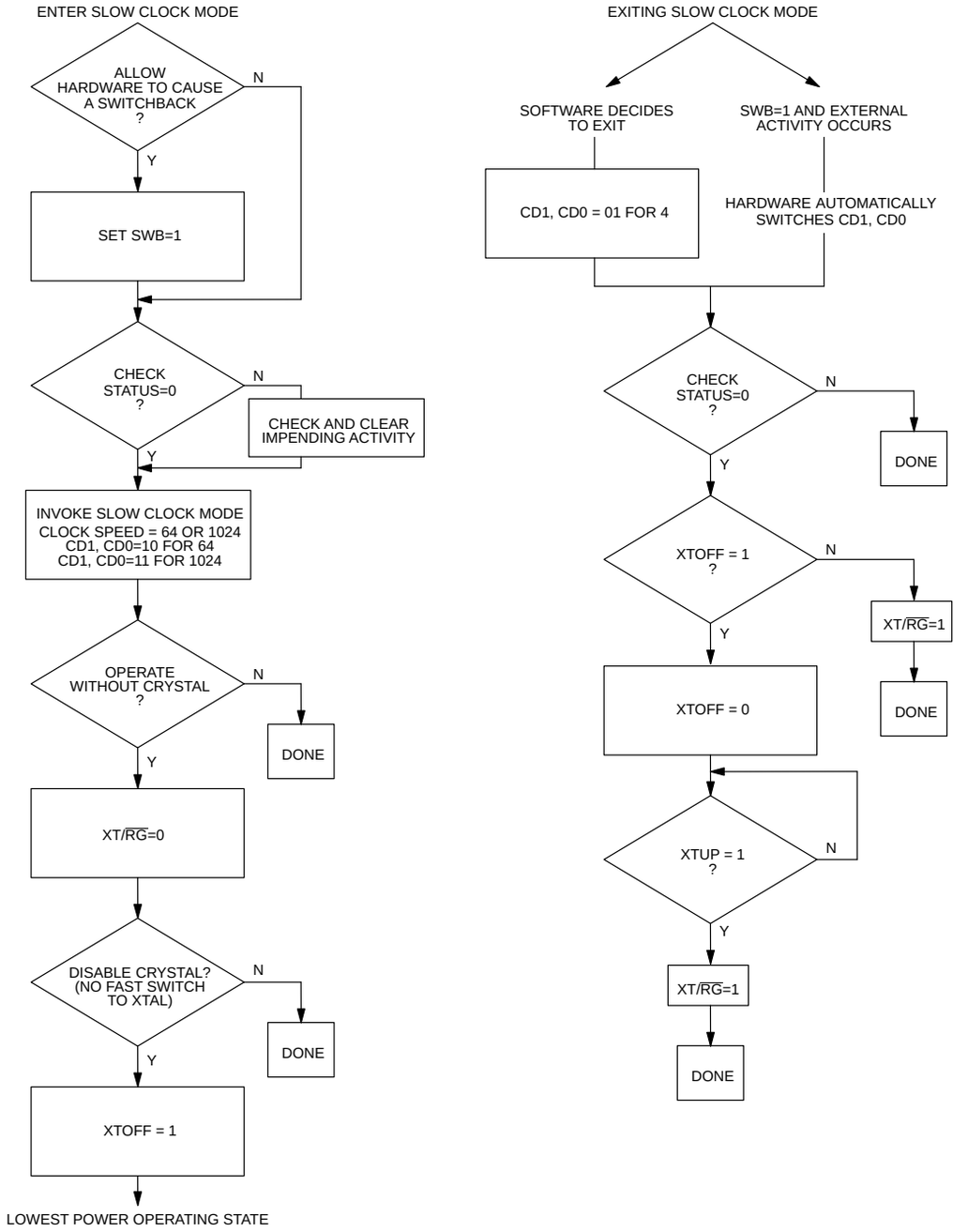

SLOW CLOCK MODE CONTROL AND STATUS BIT SUMMARY Table 12–3

BIT NAME	LOCATION	FUNCTION	RESET	WRITE ACCESS
XT/$\overline{RG}$	EXIF.3	Control. XT/$\overline{RG}$=1, runs from crystal or external clock; XT/$\overline{RG}$=0, runs from internal Ring Oscillator.	X	0 to 1 only when XTUP=1 and XTOFF=0
RGMD	EXIF.2	Status. RGMD=1, CPU clock = ring; RGMD=0, CPU clock = crystal.	0	None
CD1, CD0	PMR.7, PMR.6	Control. CD1,0=01, 4 clocks; CS1,0=10, Slow Clock Mode 1; CD1,0=11, Slow Clock Mode 2.	0, 1	Write CD1,0=10 or 11 only from CD1,0=01
SWB	PMR.5	Control. SWB=1, hardware invokes switch-back to 4 clocks, SWB=0, no hardware switchback.	0	Unrestricted
XTOFF	PMR.3	Control. Disables crystal operation after ring is selected.	0	1 only when XT/$\overline{RG}$=0
PIP	STATUS.7	Status. 1 indicates a power–fail interrupt in service.	0	None
HIP	STATUS.6	Status. 1 indicates high priority interrupt in service.	0	None
LIP	STATUS.5	Status. 1 indicates low priority interrupt in service.	0	None
XTUP	STATUS.4	Status. 1 indicates that the crystal has stabi-lized.	1	None
SPTA0	STATUS.1	Status. Serial transmission on serial port 0.	0	None
SPRA0	STATUS.0	Status. Serial word reception on serial port 0.	0	None

12.2.2 IDLE MODE

Setting the lsb of the Power Control register (PCON; 87h) invokes the IDLE mode. IDLE will leave internal clocks, serial port and timers running. Power consumption drops because the memory is not being accessed. Since clocks are running, the IDLE power consumption is a function of crystal frequency. It should be approximately 1/2 of the operational power at a given frequency. The CPU can exit the IDLE state with any interrupt or a reset. IDLE is available for backward software compatibility. The system can now reduce power consumption to below IDLE levels by using Slow Clock Mode / 64 or / 1024 and running NOPs .

12.2.3 STOP MODE AND ENHANCEMENTS

Setting bit 1 of the Power Control register (PCON; 87h) invokes the STOP mode. STOP mode is the lowest power state since it turns off all internal clocking. The ICC of a standard STOP mode is approximately 1 uA (but is specified in the Electrical Specifications). The CPU will exit STOP mode from an external interrupt or a reset condition. Internally generated interrupts (timer, serial port, watchdog) are not useful since they require clocking activity.

The SEM provides two enhancements to the STOP mode. The SEM incorporates a band–gap reference which is used to determine Power–fail Interrupt and Reset thresholds and to provide a reference for the on–chip A/D converter. The default state is that the band–gap reference is off while in STOP mode. This allows the extremely low power state mentioned above. A user can optionally choose to have the band–gap enabled during STOP mode. With the band–gap reference enabled, PFI and Power–fail reset are functional and are valid means for leaving STOP mode. This allows software to detect and compensate for a brown–out or power supply sag, even when in STOP mode. In this condition, ICC will be approximately 100 uA compared with 1 uA with the band–gap off.

If a user does not require a Power–fail Reset or Interrupt while in STOP mode, the band–gap can remain disabled. In addition, the $\overline{VRST}$ output pin will be at a low (active) level. In this manner, the SEM and the rest of

the system under the control of the $\overline{VRST}$ pin is prepared for a power down condition should it occur while STOP with the band–gap disabled is in effect.

The control of the band–gap reference is located in the Extended Interrupt Flag register (EXIF; 91h). Setting BGS (EXIF.0) to a 1 will keep the band–gap reference enabled during STOP mode. The default or reset condition is with the bit at a logic 0. This results in the band–gap being off during STOP mode. Note that this bit has no control of the reference during full power, Slow Clock Mode, or IDLE modes.

The second feature allows an additional power saving option while also making STOP easier to use. This is the ability to start instantly when exiting STOP mode. It is the internal ring oscillator that provides this feature. This ring can be a clock source when exiting STOP mode in response to an interrupt. The benefit of the ring oscillator is as follows.

Using STOP mode turns off the crystal oscillator and all internal clocks to save power. This requires that the oscillator be restarted when exiting STOP mode. Actual start–up time is crystal dependent, but is normally at least 4 mS. A common recommendation is 10 mS. In an application that will wake–up, perform a short operation, then return to sleep, the crystal start–up can be longer than the real transaction. However, the ring oscillator will start instantly. Running from the ring, the user can perform a simple operation and return to sleep in less time than it takes to start the crystal. If a user selects the ring to provide the start–up clock and the processor remains running, hardware will automatically switch to the crystal once a power–on reset interval (65536 clocks) has expired. Hardware uses this value to assure proper crystal start even though power is not being cycled.

The ring oscillator runs at approximately 4 MHz but will not be a precise value. Do not conduct real–time precision operations (including serial communication) during this ring period. Figure 12–2 shows how the operation would compare when using the ring, and when starting up normally. The default state is to exit STOP mode without using the ring oscillator.

The RGSL – Ring Select bit at EXIF.1 (EXIF; 91h) controls this function. When RGSL = 1, the CPU will use the ring oscillator to exit STOP mode quickly. As mentioned above, the processor will automatically switch from the ring to the crystal after a delay of 65,536 crystal clocks. For a 3.57 MHz crystal, this is approximately 18 mS. The processor sets a flag called RGMD– Ring Mode, located at EXIF.2, that tells software that the ring is being used. The bit will be a logic 1 when the ring is in use. Attempt no serial communication or precision timing while this bit is set, since the operating frequency is not precise.

RING OSCILLATOR EXIT FROM STOP MODE Figure 12–2

STOP MODE WITHOUT RING STARTUP

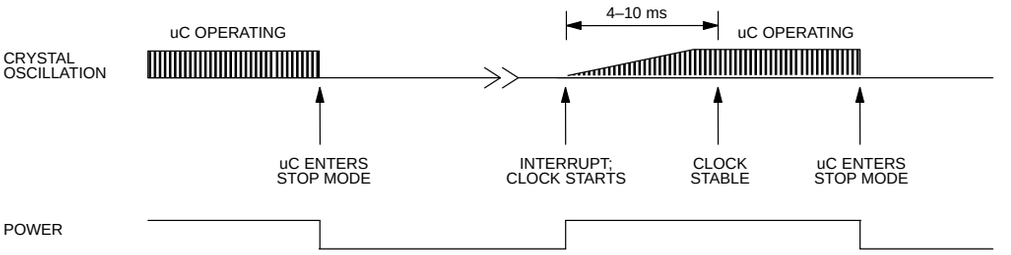

STOP MODE WITH RING STARTUP

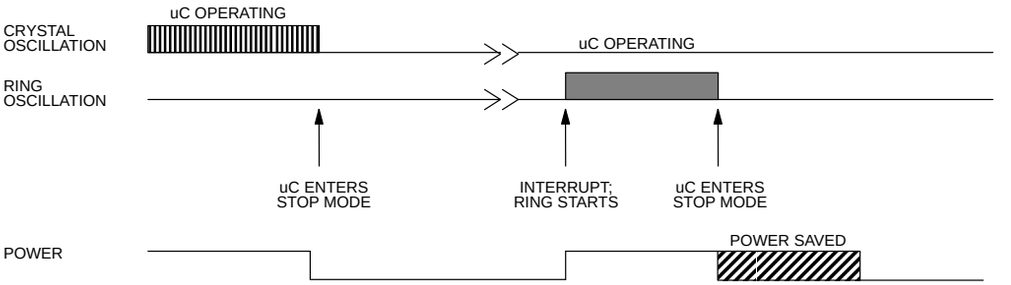

DIAGRAM ASSUMES THAT THE OPERATION FOLLOWING STOP REQUIRES LESS THAN 18 mS TO COMPLETE.

13.0 +5.0V ELECTRICAL SPECIFICATIONS

13.1 ABSOLUTE MAXIMUM RATINGS*

Voltage on Any Pin Relative to Ground	–0.3V to +6.0V
Operating Temperature	0°C to 70°C
Storage Temperature	–55°C to +125°C
Soldering Temperature	260°C for 10 seconds

* This is a stress rating only and functional operation of the device at these or any other conditions above those indicated in the operation sections of this specification is not implied. Exposure to absolute maximum rating conditions for extended periods of time may affect reliability.

13.2 MICROCONTROLLER DC ELECTRICAL CHARACTERISTICS

(0°C to 70°C; V_{CC}=5.0 ± 10%)

PARAMETER	SYMBOL	MIN	TYP	MAX	UNITS	NOTES
Supply Voltage	V_{CC}	4.5	5.0	5.5	V	1
Power Fail Warning @ 25 MHz	V_{PFW}		4.25		V	1
Minimum Operating Voltage @ 25 MHz	V_{RST}		4.00		V	1
Supply Current Active Mode @ 25 MHz	I_{CC}		50		mA	2
Supply Current Idle Mode @ 25 MHz	I_{IDLE}		10		mA	3
Supply Current Stop Mode Band–gap Disabled	I_{STOP}		1		µA	4
Supply Current Stop Mode Band–gap Enabled	I_{SPBG}		100		µA	4
Input Low Level (All except KSI.7–0, SDAx, and SCLx pins)	V_{IL1}	–0.3		+0.8	V	1
Input Low Level (KSI.7–0 pins)	V_{IL2}	–0.3		+0.6	V	1
Input Low Level (SDAx, SCLx pins)	V_{IL3}	–0.3		+0.3 V_{CC}	V	1
Input High Level (All except XTAL1, RST, SDAx, and SCLx pins)	V_{IH1}	2.0		V_{CC}+0.3	V	1
Input High Level (XTAL1 and RST)	V_{IH2}	3.5		V_{CC}+0.3	V	1
Input High Level (SDAx, SCLx Pins)	V_{IH3}	3.5		V_{CC}+0.3	V	1
Output Low Voltage: Ports 1.0, Ports 1.1, Ports 3, 4, 6, 7, 8, 9 and 10 @ I_{OL}=1.6 mA $\overline{VRST}$, $\overline{VPFW}$	V_{OL1}		0.15	0.45	V	1
Output Low Voltage: Ports 0 and 2, ALE, $\overline{PSEN}$ @ I_{OL}=3.2 mA	V_{OL2}		0.15	0.45	V	1

Output Low Voltage: Ports 1.2 – Ports 1.7, Port 5 @ I_{OL}=8 mA	V_{OL3}		0.15	0.8	V	1
Output High Voltage: Ports 1.0, Ports 1.1, Ports 2, 3, 6 (PWM disabled), 7, 10, ALE, $\overline{PSEN}$ @ I_{OH}= –50 µA	V_{OH1}	2.4			V	1, 6

13.2 MICROCONTROLLER DC ELECTRICAL CHARACTERISTICS (cont'd)

(0°C to 70°C; V_{CC}=5.0 ± 10%)

Output High Voltage: Ports 1.0, Ports 1.1, Ports 2, 3, 4, 7, 10 transition mode, and Ports 6.0–Ports 6.3 pins with PWM channel enabled @ I_{OH}= –1.5 mA	V_{OH2}	2.4			V	1, 7
Output High Voltage: Port 0, 2 (bus mode) @ I_{OH} = –8 mA $\overline{PSEN}$, ALE	V_{OH3}	2.4			V	1, 5
Input Low Current: Ports 1.0, Ports 1.1, Ports 3, 6 (PWM disabled), 7, 10 @ 0.45V	I_{IL}			–55	µA	
Transition Current from 1 to 0 Ports 1.0, Ports 1.1, Ports 2, 3, 6 (PWM disabled), 7, 10 @ 2V	I_{TL}			–650	µA	8
Input Leakage: Port 0 pins (I/O Mode), XTAL1	I_L	–10		+10	µA	10
Input Leakage: Port 0 pins (Bus Mode)	I_L	–300		+300	µA	9
RST Pull–down Resistance	R_{RST}	50		250	KΩ	
Internal Port Resistors (KSI7–0)	R_P	5		20	KΩ	

NOTES

1. All voltages are referenced to ground.
2. Active current is measured with a 25 MHz clock source driving XTAL1, V_{CC}=RST=+6.0V. All other pins disconnected.
3. Idle mode current is measured with a 25 MHz clock source driving XTAL1, V_{CC}=+6.0V, RST at ground, all other pins disconnected.
4. Stop mode current measured with XTAL1 and RST grounded, V_{CC}=+5.5V, all other pins disconnected. This value is not guaranteed. Users that are sensitive to this specification should contact Dallas Semiconductor for more information.
5. This specification applies to Port 0 when external memory is accessed.
6. RST=V_{CC}. This condition mimics operation of pins in I/O mode. Port 0 is tristated in reset and when at a logic high state during I/O mode.

7. During a 0 to 1 transition, a one–shot drives the ports hard for two oscillator clock cycles. This measurement reflects port in transition mode. In addition, this specification applies to any of the Port 6.0–Port 6.3 pins when the associated PWM channel is enabled.

8. Ports 1, 2, and 3 source transition current when being pulled down externally. Current reaches its maximum at approximately 2V.

9. $0.45<V_{IN}<V_{CC}$. Not a high impedance input. This port is a weak address holding latch in Bus Mode. Peak current occurs near the input transition point of the latch, approximately 2V.

10. $0.45<V_{IN}<V_{CC}$. $RST=V_{CC}$. This condition mimics operation of pins in I/O mode.

13.3 MICROCONTROLLER AC ELECTRICAL CHARACTERISTICS

13.3.1 EXTERNAL PROGRAM MEMORY CHARACTERISTICS

(0°C to 70°C; V_{CC}=5.0 ± 10%)

PARAMETER	SYMBOL	25 MHz		VARIABLE CLOCK		UNITS
		MIN	MAX	MIN	MAX	
Oscillator Frequency	$1/t_{CLCL}$	0	25	0	25	MHz
ALE Pulse Width	t_{LHLL}	55		$(3t_{CLCL}/2)–5$		ns
Port 0 Address Valid to ALE Low	t_{AVLL}	15		$(t_{CLCL}/2)–5$		ns
Address Hold after ALE Low	t_{LLAX1}	15		$(t_{CLCL}/2)–5$		ns
ALE Low to Valid Instruction In	t_{LLIV}		80		$2.5t_{CLCL}–20$	ns
ALE Low to $\overline{PSEN}$ Low	t_{LLPL}	15		$(t_{CLCL}/2)–5$		ns
$\overline{PSEN}$ Pulse Width	t_{PLPH}	75		$2t_{CLCL}–5$		ns
$\overline{PSEN}$ Low to Valid Instruction In	t_{PLIV}		60		$2t_{CLCL}–20$	ns
Input Instruction Hold after $\overline{PSEN}$	t_{PXIX}	0		0		ns
Input Instruction Float after $\overline{PSEN}$	t_{PXIZ}		35		$t_{CLCL}–5$	ns
Port 0 Address to Valid Instruction In	t_{AVIV1}		100		$3t_{CLCL}–20$	ns
Port 2 Address to Valid Instruction In	t_{AVIV2}		115		$3.5t_{CLCL}–25$	ns
$\overline{PSEN}$ Low to Address Float	t_{PLAZ}		0		0	ns

NOTES:

1. All signals rated over operating temperature.

2. All signals characterized with load capacitance of 80 pF except Port 0, ALE, $\overline{PSEN}$, $\overline{RD}$ and $\overline{WR}$ with 100 pF.

3. Interfacing to memory devices with float times (turn off times) over 25 ns may cause contention. This will not damage the parts, but will cause an increase in operating current.

13.3.2 MOVX USING STRETCH MEMORY CYCLES

(0°C to 70°C; V_{CC}=5.0 ± 10%)

PARAMETER	SYMBOL	VARIABLE CLOCK MIN	VARIABLE CLOCK MAX	UNITS	STRETCH
Data Access ALE Pulse Width	t_{LHLL2}	$1.5t_{CLCL}$–5 $2t_{CLCL}$–5		ns	t_{MCS}=0 t_{MCS}>0
Address Hold after ALE Low for MOVX Write	t_{LLAX2}	$0.5t_{CLCL}$–5 t_{CLCL}–5		ns	t_{MCS}=0 t_{MCS}>0
$\overline{RD}$ Pulse Width	t_{RLRH}	$2t_{CLCL}$–5 t_{MCS}–10		ns	t_{MCS}=0 t_{MCS}>0
$\overline{WR}$ Pulse Width	t_{WLWH}	$2t_{CLCL}$–5 t_{MCS}–10		ns	t_{MCS}=0 t_{MCS}>0
$\overline{RD}$ Low to Valid Data In	t_{RLDV}		$2t_{CLCL}$–20 t_{MCS}–20	ns	t_{MCS}=0 t_{MCS}>0
Data Hold after Read	t_{RHDX}	0		ns	
Data Float after Read	t_{RHDZ}		t_{CLCL}–5 $2t_{CLCL}$–5	ns	t_{MCS}=0 t_{MCS}>0
ALE Low to Valid Data In	t_{LLDV}		$2.5t_{CLCL}$–20 t_{MCS}+t_{CLCL}–40	ns	t_{MCS}=0 t_{MCS}>0
Port 0 Address to Valid Data In	t_{AVDV1}		$3t_{CLCL}$–20 t_{MCS}+$1.5t_{CLCL}$–20	ns	t_{MCS}=0 t_{MCS}>0
Port 2 Address to Valid Data In	t_{AVDV2}		$3.5t_{CLCL}$–20 t_{MCS}+$2t_{CLCL}$–20	ns	t_{MCS}=0 t_{MCS}>0
ALE Low to $\overline{RD}$ or $\overline{WR}$ Low	t_{LLWL}	$0.5t_{CLCL}$–5 t_{CLCL}–5	$0.5t_{CLCL}$+5 t_{CLCL}+5	ns	t_{MCS}=0 t_{MCS}>0
Port 0 Address to $\overline{RD}$ or $\overline{WR}$ Low	t_{AVWL1}	t_{CLCL}–5 $2t_{CLCL}$–5		ns	t_{MCS}=0 t_{MCS}>0
Port 2 Address to $\overline{RD}$ or $\overline{WR}$ Low	t_{AVWL2}	$1.5t_{CLCL}$–5 $2.5t_{CLCL}$–5		ns	t_{MCS}=0 t_{MCS}>0
Data Valid to $\overline{WR}$ Transition	t_{QVWX}	–5		ns	
Data Hold after Write	t_{WHQX}	t_{CLCL}–5 $2t_{CLCL}$–5		ns	t_{MCS}=0 t_{MCS}>0
$\overline{RD}$ Low to Address Float	t_{RLAZ}		$-0.5t_{CLCL}$–5	ns	
$\overline{RD}$ or $\overline{WR}$ High to ALE High	t_{WHLH}	0 t_{CLCL}–5	10 t_{CLCL}+5	ns	t_{MCS}=0 t_{MCS}>0

NOTE:

t_{MCS} is a time period related to the Stretch memory cycle selection. The following table shows the value of t_{MCS} for each Stretch selection.

M2	M1	M0	MOVX CYCLES	t_{MCS}
0	0	0	2 machine cycles	0
0	0	1	3 machine cycles (default)	4 t_{CLCL}
0	1	0	4 machine cycles	8 t_{CLCL}
0	1	1	5 machine cycles	12 t_{CLCL}
1	0	0	6 machine cycles	16 t_{CLCL}
1	0	1	7 machine cycles	20 t_{CLCL}
1	1	0	8 machine cycles	24 t_{CLCL}
1	1	1	9 machine cycles	28 t_{CLCL}

13.3.3 EXTERNAL CLOCK CHARACTERISTICS

(0°C to 70°C; V_{CC}=5.0 ± 10%)

PARAMETER	SYMBOL	MIN	TYP	MAX	UNITS	NOTES
Clock High Time	t_{CHCX}	20			ns	
Clock Low Time	t_{CLCX}	20			ns	
Clock Rise Time	t_{CLCH}			10	ns	
Clock Fall Time	t_{CHCL}			10	ns	

13.3.4 SERIAL PORT MODE 0 TIMING CHARACTERISTICS

(0°C to 70°C; V_{CC}=5.0 ± 10%)

PARAMETER	SYMBOL	MIN	TYP	MAX	UNITS	NOTES
Serial Port Clock Cycle Time SM2=0, 12 clocks per cycle SM2=1, 4 clocks per cycle	t_{XLXL}		 $12t_{CLCL}$ $4t_{CLCL}$		 ns ns	
Output Data Setup to Clock Rising SM2=0, 12 clocks per cycle SM2=1, 4 clocks per cycle	t_{QVXH}		 $10t_{CLCL}$ $3t_{CLCL}$		 ns ns	
Output Data Hold from Clock Rising SM2=0, 12 clocks per cycle SM2=1, 4 clocks per cycle	t_{XHQX}		 $2t_{CLCL}$ t_{CLCL}		 ns ns	
Input Data Hold after Clock Rising SM2=0, 12 clocks per cycle SM2=1, 4 clocks per cycle	t_{XHDX}		 t_{CLCL} t_{CLCL}		 ns ns	
Clock Rising Edge to Input Data Valid SM2=0, 12 clocks per cycle SM2=1, 4 clocks per cycle	t_{XHDV}		 $11t_{CLCL}$ $3t_{CLCL}$		 ns ns	

EXPLANATION OF AC SYMBOLS

In an effort to remain compatible with the original 8051 family, this device specifies the same parameters as such devices, using the same symbols. For completeness, the following is an explanation of the symbols.

t Time
A Address
C Clock
D Input data
H Logic level high
L Logic level low
I Instruction
P $\overline{PSEN}$
Q Output data
R $\overline{RD}$ signal
V Valid
W $\overline{WR}$ signal
X No longer a valid logic level
Z Tri–state

13.3.5 POWER CYCLE TIMING CHARACTERISTICS (0°C to 70°C; V_{CC}=5.0 ± 10%)

PARAMETER	SYMBOL	MIN	TYP	MAX	UNITS	NOTES
Cycle Start–up Time	t_{CSU}		1.8		ms	1
Power–on Reset Delay	t_{POR}			65536	t_{CLCL}	2

NOTES:

1. Start–up time for crystals varies with load capacitance and manufacturer. Time shown is for an 11.0592 MHz crystal manufactured by Fox.
2. Reset delay is a synchronous counter of crystal oscillations after crystal start–up. At 25 MHz, this time is 2.62 ms.

EXTERNAL PROGRAM MEMORY READ CYCLE Figure 13–1

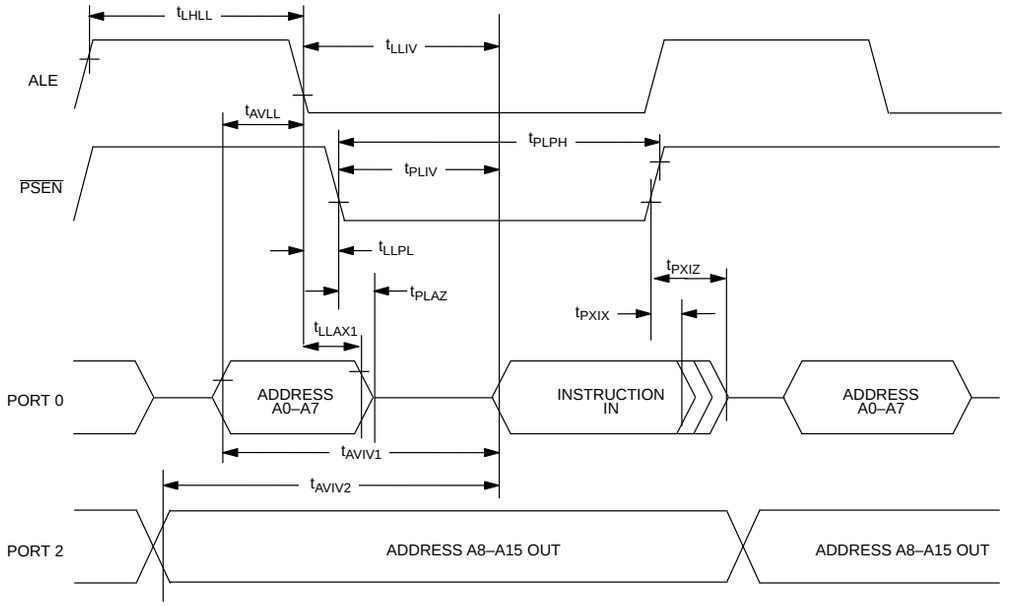

EXTERNAL DATA MEMORY READ CYCLE Figure 13–2

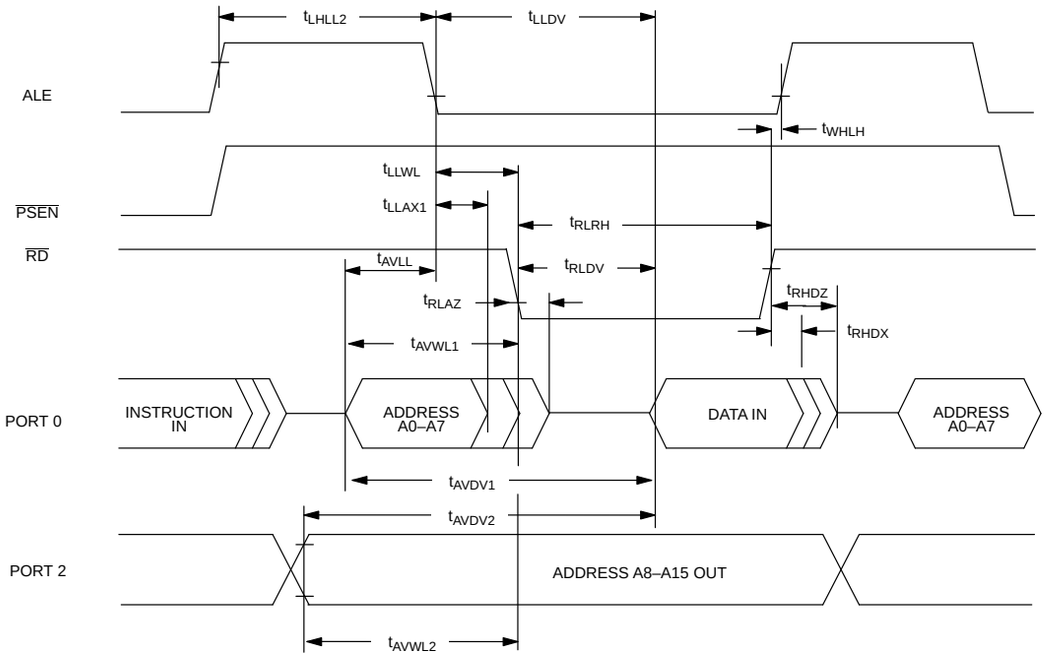

EXTERNAL DATA MEMORY WRITE CYCLE Figure 13–3

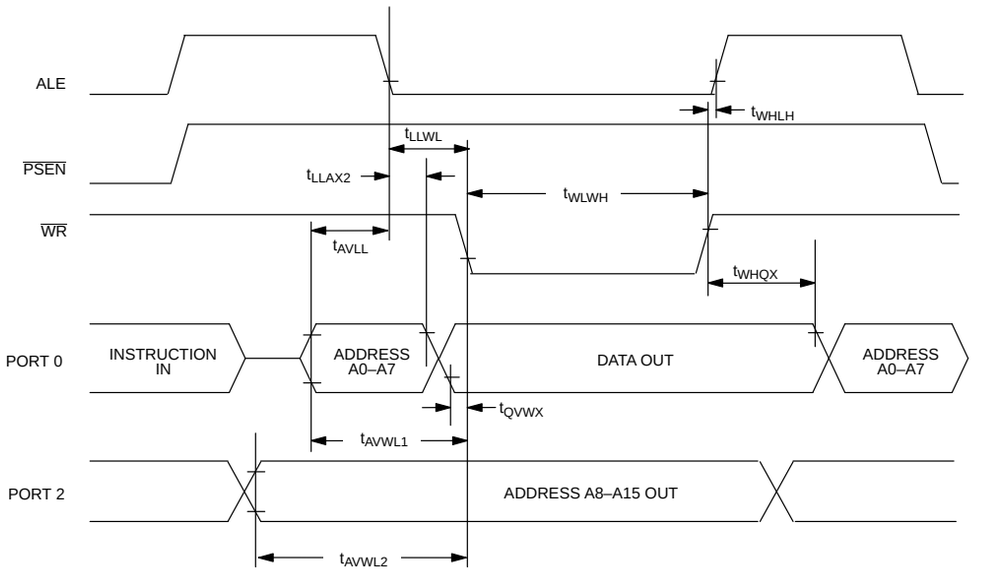

DATA MEMORY WRITE WITH STRETCH=1 Figure 13–4

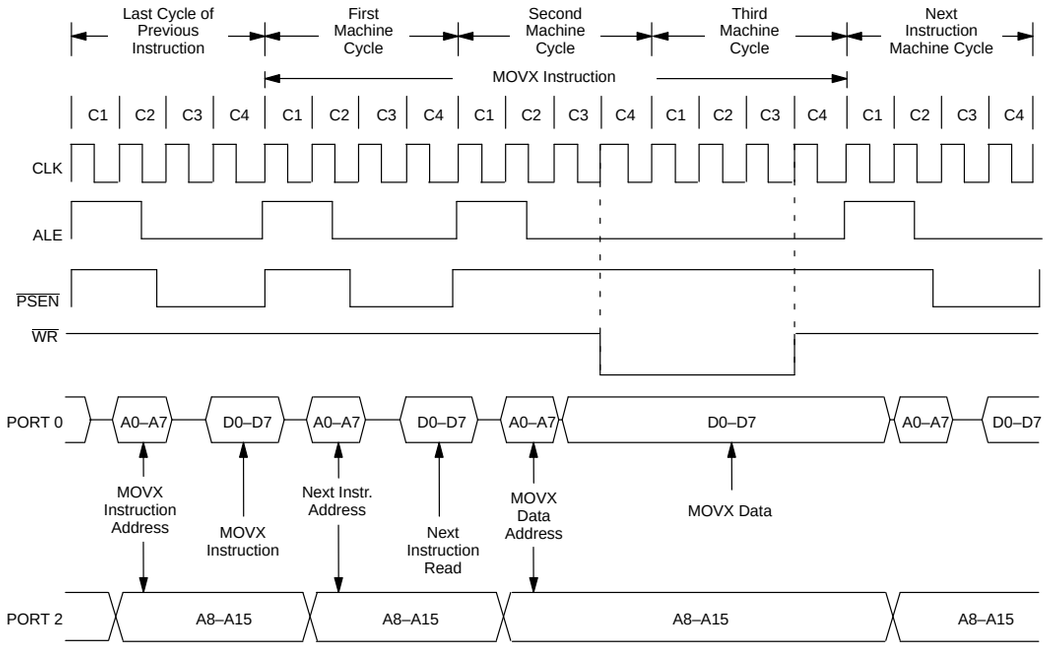

DATA MEMORY WRITE WITH STRETCH=2 Figure 13–5

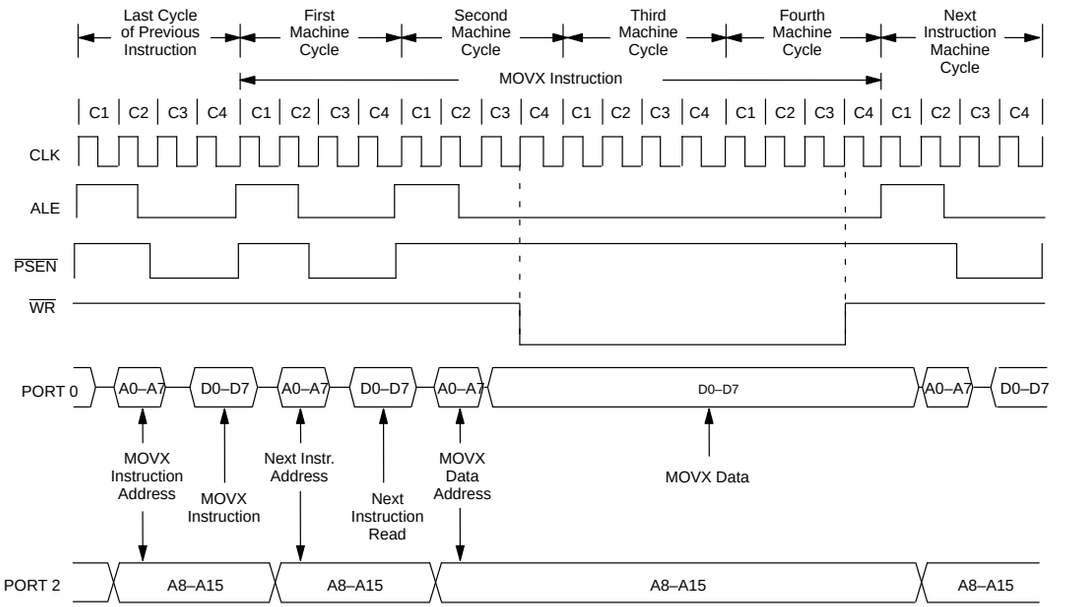

FOUR CYCLE DATA MEMORY WRITE
STRETCH VALUE=2

EXTERNAL CLOCK DRIVE Figure 13–6

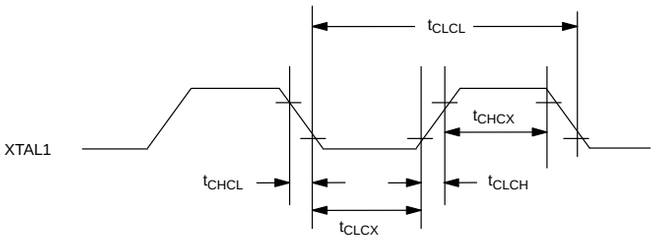

SERIAL PORT MODE 0 TIMING Figure 13–7

SERIAL PORT 0 (SYNCHRONOUS MODE)
HIGH SPEED OPERATION SM2=1=>TXD CLOCK=XTAL/4

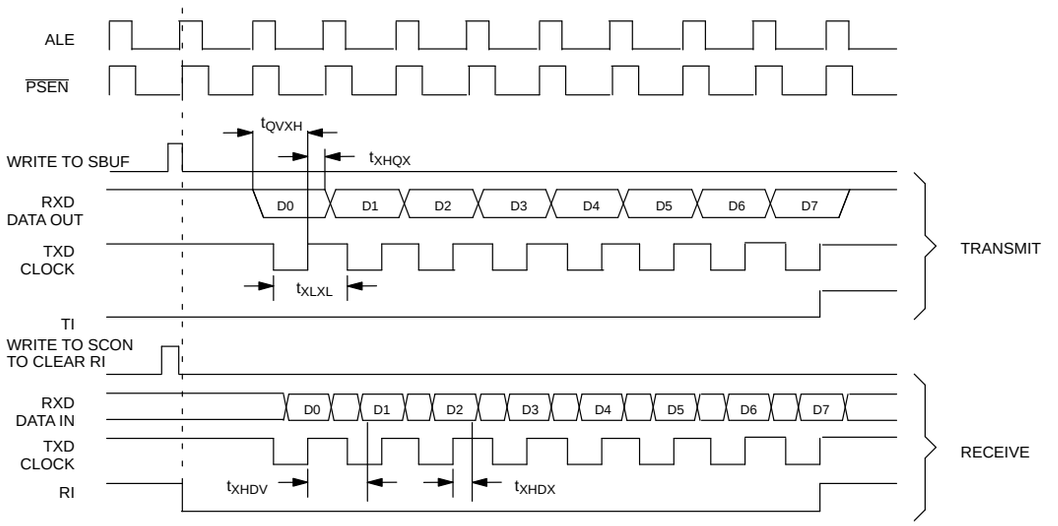

SERIAL PORT 0 (SYNCHRONOUS MODE)
SM2=0=>TXD CLOCK=XTAL/12

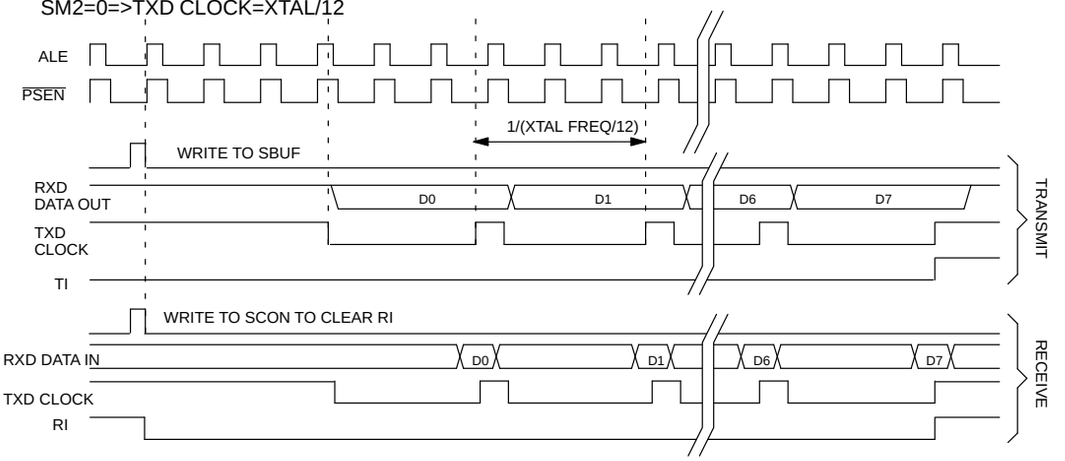

POWER CYCLE TIMING Figure 13–8

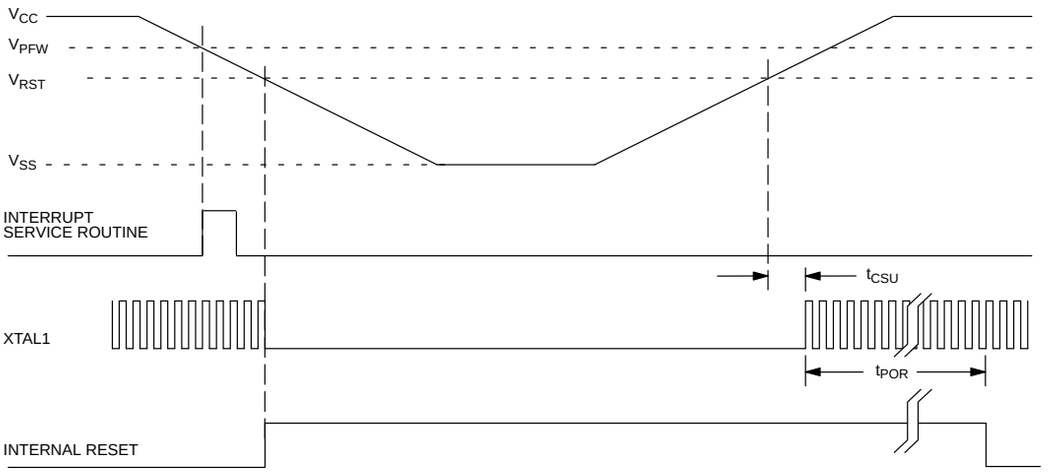

13.4 SYSTEM INTERFACE DC ELECTRICAL CHARACTERISTICS

(0°C to 70°C; V_{CC}=5.0 ± 10%)

PARAMETER	SYMBOL	MIN	TYP	MAX	UNITS	NOTES
Power Supply Voltage	HVCC	4.5	5.0	5.5	V	1
Average HVCC Power Supply Current	HICC1		600		µA	2, 3
Input Logic 1:	V_{IH}	2.8		V_{CC} +0.3	V	1, 6
Input Logic 0:	V_{IL}	–0.3		0.6	V	1, 6
Input Leakage Current (Any Input)	I_{IL}	–1		+1	µA	6
Output Logic 1 Voltage @ I_{OH} = –1.0 mA	V_{OH}	2.4			V	7
Output Logic 0 Voltage @ I_{OL} = +2.1 mA	V_{OL}			0.4	V	7

NOTES:

1. All voltages referenced to ground.
2. Typical values are at 25°C and nominal supplies.
3. Outputs are open.
4. Applies to the SD0–SD7 pins, when each are in a high impedance state.
5. Measured with a load of 50 pF + 1 TTL gate.
6. Applies to system interface inputs which are powered via the HVCC supply: A0, $\overline{IOR}$, $\overline{KBCS}$, $\overline{IOW}$, $\overline{PM1CS}$, $\overline{PM2CS}$ and SD7–SD0.
7. Applies to system interface outputs which are powered via the HVCC supply; KBOBF, $\overline{SMI1}$, $\overline{SMI2}$, and SD7 – SD0.

13.5 HOST I/F AC TIMING CHARACTERISTICS

(0°C to 70°C; V_{CC}=5.0 ± 10%)

PARAMETER	SYMBOL	MIN	TYP	MAX	UNITS	NOTES
Cycle Time	t_{CYC}	160		DC	ns	
Input Rise and Fall Time	t_R, t_F			15	ns	
Chip Select, A0 Setup Time Before $\overline{IOR}$, $\overline{IOW}$	t_{CIO}	10			ns	
$\overline{IOR}$, $\overline{IOW}$ Low Time	t_{IOL}	50			ns	
$\overline{IOR}$, $\overline{IOW}$ High Time	t_{IOH}	80			ns	
Delay From $\overline{IOR}$ to Data	t_{IRD}			50	ns	
Data Hold Time After $\overline{IOR}$	t_{IRDH}	5			ns	
Data Turn Off Time After $\overline{IOR}$	t_{IRDZ}			25	ns	
Data Setup Time to $\overline{IOW}$	t_{IWDS}	45			ns	
Data Hold Time From $\overline{IOW}$	t_{IWDH}	0			ns	
Chip Select, A0 Hold From $\overline{IOR}$, $\overline{IOW}$	t_{IOCH}	20			ns	

BUS TIMING FOR WRITE CYCLE TO HOST I/F REGISTERS Figure 13–9

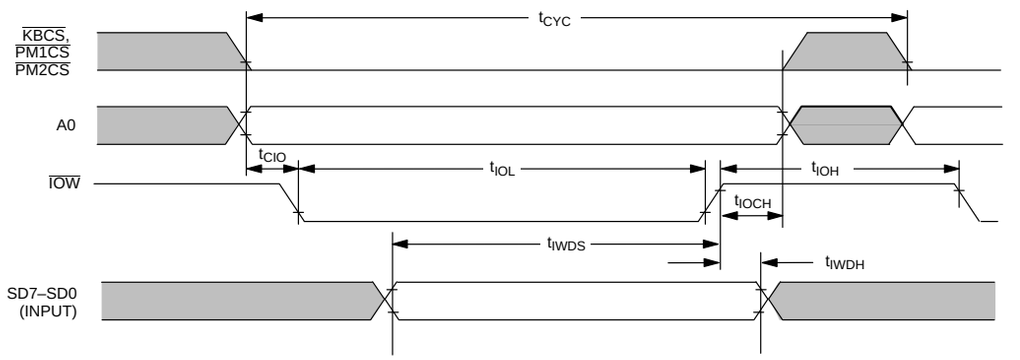

BUS TIMING FOR READ CYCLE FROM HOST I/F REGISTERS Figure 13–10

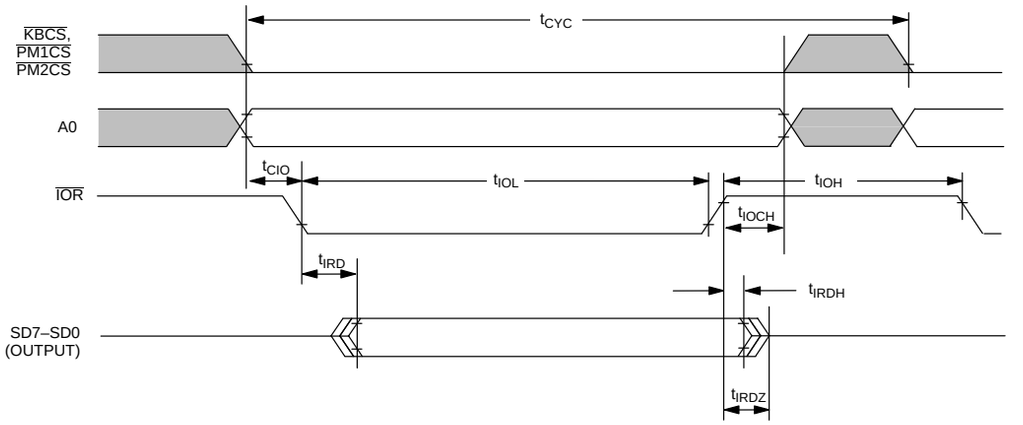

OUTPUT LOAD Figure 13–11

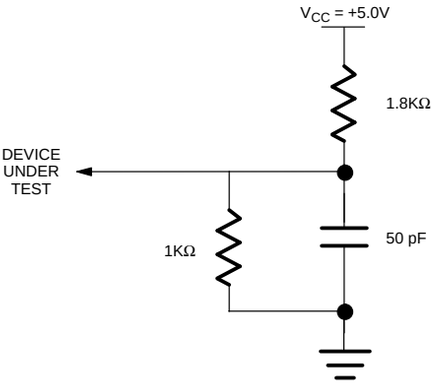

13.6 2–WIRE AC TIMING CHARACTERISTICS

(0°C to 70°C; V_{CC}=5.0 ± 10%)

PARAMETER	SYMBOL	INPUT	OUTPUT
START Condition Hold Time	t_{STAH}	≥ 14 t_{CLK} (4)	> 1.0 µs(1)
SCLx Low Time	t_{SCL}	≥ 16 t_{CLK} (4)	> 1.3 µs(1)
SCLx High Time	t_{SCH}	≥ 14 t_{CLK} (4)	> 0.6 µs(1)
SCLx, SDAx Rise Time	t_{SR}	≤ 300 ns(1)	– (2)
SCLx, SDAx Fall Time	t_{SF}	≤ 300 ns(3)	< 300 ns
Data Setup Time	t_{2DS}	≥ 100 ns	> 250 ns(1)
Data Hold Time	t_{2DH}	≥ 0 ns	≥ 8 t_{CLK} – t_{SF} (4)
Repeated START Setup Time	t_{RSTA}	≥ 14 t_{CLK} (4)	> 600 ns(1)
Repeated STOP Setup Time	t_{RSTO}	≥ 14 t_{CLK} (4)	> 600 ns(1)
Bus Free Time	t_{2BF}	≥ 14 t_{CLK} (4)	> 1.3 µs(1)

NOTES:

1. At 400Kbps. For other bit rates this value is multiplied by 400 / f_{2W}.
2. Determined by the external bus line capacitance and the external bus line pull–up resistor; this must be < 300 ns @ 400Kbps.
3. Spikes on the SDAx and SCLx lines with a duration of less than 50 ns will be filtered out. Maximum capacitance on either SDAx and SCLx = 400 pF.
4. Where t_{CLK} is the period of the XTAL oscillator and the instruction cycle rate is set to 4 clocks (default). The frequency of the XTAL oscillator should be greater than 5 MHz for 400Kbps operation.
5. Both 2–Wire ports are identical and therefore only SDAx and SCLx are used here to simplify all notations. SDAx = SDA1 or SDA2 and SCLx = SCL1 or SCL2 (“x” = 1 or 2).

2–WIRE SERIAL I/O TIMING Figure 13–12

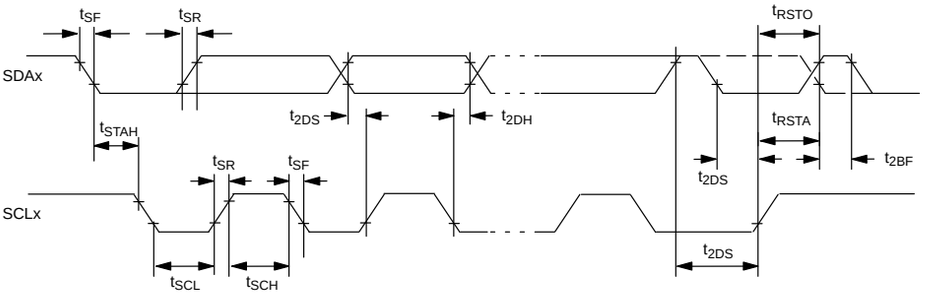

13.7 A/D CONVERTER SPECIFICATIONS

13.7.1 ABSOLUTE MAXIMUM RATINGS

PARAMETER	SYMBOL	MIN	TYP	MAX	UNITS	NOTES
Analog Supply Voltage	AVCC AGND	VCC –0.2V GND–0.2		VCC +0.2 GND +0.2	V V	
Analog Inputs (Referred to VCC, GND)	VREF+, VREF–, AIN.7–AIN.0	GND–0.2		VCC +0.2	V	
Analog Inputs (Referred to AVCC, AGND)	VREF+, VREF–, AIN.7–AIN.0	AGND –0.2		AVCC+0.2	V	

13.7.2 A/D ELECTRICAL CHARACTERISTICS

(0°C to 70°C; V_{CC}=AVCC =5.0 ± 10% AGND = GND = 0V)

PARAMETER	SYMBOL	MIN	TYP	MAX	UNITS	NOTES
Analog Supply Current	AI_{CC}		1.0		mA	
Analog Power Down Mode Current	AI_{CCPD}		100		µA	
Analog Input Voltage	V_{AIN}	VRL		VRH	V	
Ladder Resistance	R_{REF}	11	19	27	KΩ	
Analog Input Capacitance	C_{IN}		10	15	pF	
Sampling Time	t_{ADS}	5			µs	1
Conversion Time	t_{ADC}	16			µs	1, 2
Stabilization Time	t_{AD}		0		µs	4
Transfer Characteristics: Resolution		8	10		Bits	
Differential non–linearity	E_{DL}		± 0.3	± 0.75	LSB	
Integral non–linearity	E_{IL}		± 0.2	± 1.0	LSB	
Offset Error	E_{OS}		± 0.25	± 1.0	LSB	
Gain Error	E_G		± 0.25	± 1.0	%	
Crosstalk between A/D input pins	E_{CT}			60	dB	

NOTES:

1. ACLK = 1 µs.
2. A complete conversion cycle requires 16 ACLK periods, including five input sampling periods.
3. Relative accuracy is defined as the deviation of the code transition points from the ideal transfer point on a straight line from the zero to the full scale of the device.
4. Stabilization time is defined as the time required for the A/D circuitry to stabilize after ADON is set to A logic “1”.

128–PIN TQFP

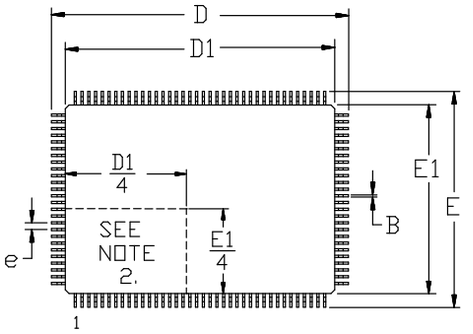

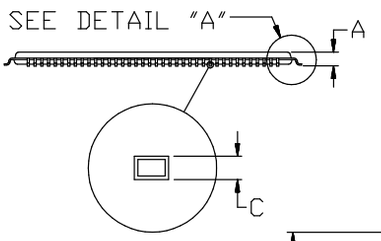

NOTES:

1. DIMENSIONS D1 AND E1 INCLUDE MOLD MISMATCH, BUT DO NOT INCLUDE MOLD PROTRUSION; ALLOWABLE PROTRUSION IS 0.25 MM PER SIDE.
2. DETAILS OF PIN 1 IDENTIFIER ARE OPTIONAL BUT MUST BE LOCATED WITHIN THE ZONE INDICATED.
3. ALLOWABLE DAMBAR PROTRUSION IS 0.08 MM TOTAL IN EXCESS OF THE B DIMENSION; PROTRUSION NOT TO BE LOCATED ON LOWER RADIUS OR FOOT OF LEAD.

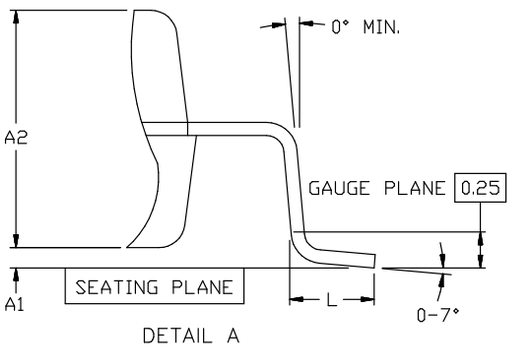

DIMENSIONS ARE IN MILLIMETERS

PKG	128–PIN	
DIM	MIN	MAX
A	–	1.60
A1	0.05	–
A2	1.35	1.45
B	0.17	0.27
C	0.09	0.20
D	21.80	22.20
D1	20.00 BSC	
E	15.80	16.20
E1	14.00 BSC	
e	0.50 BSC	
L	0.45	0.75

56–G4011–000