19-1653; Rev 2; 2/04

Fast, Low-Voltage, 2.5Ω, SPST, CMOS Analog Switches

General Description

The MAX4645/MAX4646 single-pole, single-throw (SPST) analog switches feature a 2.5Ω typical on-resistance (R_{ON}) from a +5V supply. R_{ON} is flat (0.4Ω max) over the specified signal range. Each switch can handle Rail-to-Rail® analog signals. Off-leakage current is 0.25nA max at +25°C. These analog switches are ideal in low-distortion applications and are the preferred solution over mechanical relays in automated test equipment or applications where current switching is required. They have low power requirements, require less board space, and are more reliable than mechanical relays.

These switches operate from a +1.8V to +5V single supply, making them ideal for use in battery-powered applications. The MAX4645/MAX4646 have fast switching speeds of 12ns turn-on time (t_{ON}) and 8ns turn-off time (t_{OFF}).

The MAX4645 is a normally open (NO) switch, and the MAX4646 is a normally closed (NC) switch. Both are available in 5-pin SOT23, 6-pin SOT23, and 8-pin µMAX packages.

Applications

Battery-Powered Systems

Audio and Video Signal Routing

Low-Voltage Data-Acquisition Systems

Sample-and-Hold Circuits

Communications Circuits

Relay Replacement

Features

- **+1.8V to +5V Single-Supply Operation**
- **Guaranteed R_{ON}**
  2.5Ω max (5V supply)
  3.5Ω max (3V supply)
- **1.8V Operation**
  R_{ON} 30Ω typ Over Temperature
  t_{ON} 40ns typ, t_{OFF} 20ns typ
- **Low R_{ON} Flatness: 0.4Ω max**
- **Guaranteed Low Leakage Currents**
  ±0.25nA at +25°C
- **Rail-to-Rail Output Capability**
- **TTL/CMOS-Logic Compatible**
- **-75dB Off-Isolation at 1MHz**
- **Low Distortion: 0.014% typ**

Ordering Information

PART	TEMP RANGE	PIN-PACKAGE	TOP MARK
MAX4645EUK-T	-40°C to +85°C	5 SOT23-5	ADOB
MAX4645EUT-T	-40°C to +85°C	6 SOT23-6	AAHL
MAX4645EUA	-40°C to +85°C	8 µMAX	—
MAX4646EUK-T	-40°C to +85°C	5 SOT23-5	ADOC
MAX4646EUT-T	-40°C to +85°C	6 SOT23-6	AAHM
MAX4646EUA	-40°C to +85°C	8 µMAX	—

Rail-to-Rail is a registered trademark of Nippon Motorola, Ltd.

Pin Configurations/Functional Diagrams/Truth Tables

TOP VIEW

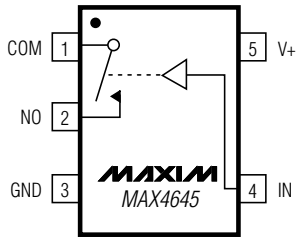

SOT23-5

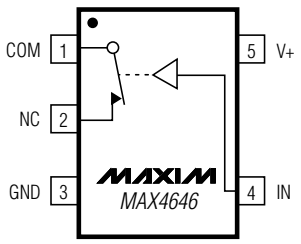

SOT23-5

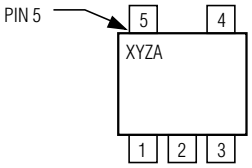

NOTE: SOT23-5 PACKAGE HAS LETTERING NEAREST PIN 5.

INPUT	SWITCH STATE	
	MAX4645	MAX4646
0	OFF	ON
1	ON	OFF

SWITCHES SHOWN FOR LOGIC 0 INPUT.

Pin Configurations/Functional Diagrams/ Truth Tables continued at end of data sheet.

For pricing, delivery, and ordering information, please contact Maxim/Dallas Direct! at 1-888-629-4642, or visit Maxim's website at www.maxim-ic.com.

Fast, Low-Voltage, 2.5Ω, SPST, CMOS Analog Switches

ABSOLUTE MAXIMUM RATINGS

V+, V_{IN} to GND .....-0.3 to +6V
COM, NO, NC to GND (Note 1).....-0.3V to (V+ + 0.3V)
Continuous Current (any terminal).....±50mA
Peak Current COM, NO, NC
(pulsed at 1ms 10% duty cycle).....±100mA

Continuous Power Dissipation (T_A = +70°C)
5-Pin SOT23 (derate 7.1mW/°C above+70°C).....571mW
6-Pin SOT23 (derate 8.7mW/°C above +70°C).....696mW
8-Pin µMAX (derate 4.1mW/°C above+70°C) 330mW
Operating Temperature Range .....-40°C to +85°C
Storage Temperature Range .....-65°C to +150°C
Lead Temperature (soldering, 10s) .....+300°C

Note 1: Signals on NO, NC, or COM, exceeding V+ or GND are clamped by internal diodes. Limit forward current to maximum current rating.

Stresses beyond those listed under "Absolute Maximum Ratings" may cause permanent damage to the device. These are stress ratings only, and functional operation of the device at these or any other conditions beyond those indicated in the operational sections of the specifications is not implied. Exposure to absolute maximum rating conditions for extended periods may affect device reliability.

ELECTRICAL CHARACTERISTICS—Single +5V Supply

(V+ = 4.5V to 5.5V, V_{IH} = 2.4V, V_{IL} = 0.8V, T_A = T_{MIN} to T_{MAX}, unless otherwise specified.) (Notes 2, 3)

PARAMETER	SYMBOL	CONDITIONS		MIN	TYP	MAX	UNITS
ANALOG SWITCH							
Input Voltage Range	V_{COM}, V_{NO}, V_{NC}			0		V+	V
COM to NO or NC On-Resistance	R_{ON}	I_{COM} = 10mA, V_{NO} or V_{NC} = 0 to V+, V+ = 4.5V	T_A = +25°C		1.5	2.5	Ω
			T_A = T_{MIN} to T_{MAX}			3	
On-Resistance Flatness (Note 4)	$R_{FLAT(ON)}$	I_{COM} = 10mA, V_{NO} or V_{NC} = 0 to V+, V+ = 4.5V	T_A = +25°C		0.1	0.4	Ω
			T_A = T_{MIN} to T_{MAX}			0.6	
Off-Leakage Current (NO or NC) (Notes 5, 6)	$I_{NO(OFF)}$, $I_{NC(OFF)}$	V_{COM} = 1V, 4.5V; V_{NO} or V_{NC} = 4.5V, 1V; V+ = 5.5V	T_A = +25°C	-0.25	0.01	0.25	nA
			T_A = T_{MIN} to T_{MAX}	-0.35		0.35	
COM Off-Leakage Current (Notes 5, 6)	$I_{COM(OFF)}$	V_{COM} = 1V, 4.5V; V_{NO} or V_{NC} = 4.5V, 1V; V+ = 5.5V	T_A = +25°C	-0.25	0.01	0.25	nA
			T_A = T_{MIN} to T_{MAX}	-0.35		0.35	
COM On-Leakage Current (Notes 5, 6)	$I_{COM(ON)}$	V+ = 5.5V; V_{COM} = 4.5V, 1V; V_{NO} or V_{NC} = 4.5V, 1V, or floating	T_A = +25°C	-0.25	0.01	0.25	nA
			T_A = T_{MIN} to T_{MAX}	-0.35		0.35	
LOGIC INPUT							
Input Logic High	V_{IH}			2.4			V
Input Logic Low	V_{IL}					0.8	V
Logic Input Current	I_{IN}	$V_{IN_}$ = 0.8V or 2.4V		-0.1	0.005	0.1	µA
SWITCH DYNAMIC CHARACTERISTICS							
Turn-On Time (Note 5)	t_{ON}	V_{NO}, V_{NC} = 3V, R_L = 300Ω, C_L = 35pF, Figure 2	T_A = +25°C		12	15	ns
			T_A = T_{MIN} to T_{MAX}			18	
Turn-Off Time (Note 5)	t_{OFF}	V_{NO}, V_{NC} = 3V, R_L = 300Ω, C_L = 35pF, Figure 2	T_A = +25°C		8	10	ns
			T_A = T_{MIN} to T_{MAX}			12	

ELECTRICAL CHARACTERISTICS—Single +5V Supply (continued)

($V+$ = 4.5V to 5.5V, V_{IH} = 2.4V, V_{IL} = 0.8V, T_A = T_{MIN} to T_{MAX}, unless otherwise specified.) (Notes 2, 3)

PARAMETER	SYMBOL	CONDITIONS		MIN	TYP	MAX	UNITS
Charge Injection	Q	V_{GEN} = 2V, C_L = 1.0nF, R_{GEN} = 0, Figure 3	T_A = +25°C		5		pC
NO or NC Capacitance	C_{OFF}	V_{NO} , V_{NC} = GND, f = 1MHz, Figure 5	T_A = +25°C		17		pF
COM Off-Capacitance	C_{COM}	V_{COM} = GND, f = 1MHz, Figure 5	T_A = +25°C		17		pF
COM On-Capacitance	C_{COM}	V_{COM} = V_{NO}, V_{NC} = GND f = 1MHz, Figure 5	T_A = +25°C		38		pF
Off-Isolation (Note 7)	V_{ISO}	V_{NO} = V_{NC} = $1V_{RMS}$, R_L = 50Ω, C_L = 5pF, f = 10MHz, Figure 4	T_A = +25°C		-55		dB
		V_{NO} = V_{NC} = $1V_{RMS}$, R_L = 50Ω, C_L = 5pF, f = 1MHz, Figure 4	T_A = +25°C		-75		dB
Total Harmonic Distortion	THD	R_L = 600Ω, $5V_{P-P}$, f = 20Hz to 20kHz	T_A = +25°C		0.014		%
POWER SUPPLY							
Positive Supply Current	I+	$V+$ = 5.5V, V_{IN} = 0 or $V+$, all channels on or off	T_A = +25°C		0.0001		µA
			T_A = T_{MIN} to T_{MAX}			1.0	

ELECTRICAL CHARACTERISTICS—Single +3V Supply

($V+$ = 2.7V to 3.3V, V_{IH} = 2.0V, V_{IL} = 0.4V, T_A = T_{MIN} to T_{MAX}, unless otherwise specified.) (Notes 2, 3)

PARAMETER	SYMBOL	CONDITIONS		MIN	TYP	MAX	UNITS
ANALOG SWITCH							
Input Voltage Range	V_{COM}, V_{NO}, V_{NC}			0		V+	V
COM to NO or NC On-Resistance	R_{ON}	I_{COM} = 10mA, V_{NO} or V_{NC} = 0 to $V+$, $V+$ = 2.7V	T_A = +25°C		2.5	3.5	Ω
			T_A = T_{MIN} to T_{MAX}			4.5	
On-Resistance Flatness (Note 4)	$R_{FLAT(ON)}$	I_{COM} = 10mA, V_{NO} or V_{NC} = 0 to $V+$, $V+$ = 2.7V	T_A = +25°C		0.5	0.9	Ω
			T_A = T_{MIN} to T_{MAX}			1	
Off-Leakage Current (NO or NC) (Notes 5, 6)	$I_{NO(OFF)}$, $I_{NC(OFF)}$	V_{COM} = 1V, 3V; V_{NO} or V_{NC} = 3V, 1V; $V+$ = 3.3V	T_A = +25°C	-0.25	0.01	0.25	nA
			T_A = T_{MIN} to T_{MAX}	-0.35		0.35	
COM Off-Leakage Current (Notes 5, 6)	$I_{COM(OFF)}$	V_{COM} = 1V, 3V; V_{NO} or V_{NC} = 3V, 1V; $V+$ = 3.3V	T_A = +25°C	-0.25	0.01	0.25	nA
			T_A = T_{MIN} to T_{MAX}	-0.35		0.35	
COM On-Leakage Current (Notes 5, 6)	$I_{COM(ON)}$	$V+$ = 3.3V; V_{COM} = 1V, 3V; V_{NO} or V_{NC} = 1V, 3V or floating	T_A = +25°C	-0.25	0.01	0.25	nA
			T_A = T_{MIN} to T_{MAX}	-0.35		0.35	

Fast, Low-Voltage, 2.5Ω, SPST, CMOS Analog Switches

ELECTRICAL CHARACTERISTICS—Single +3V Supply (continued)

(V+ = 2.7V to 3.3V, V_{IH} = 2.0V, V_{IL} = 0.4V, T_A = T_{MIN} to T_{MAX}, unless otherwise specified.) (Notes 2, 3)

PARAMETER	SYMBOL	CONDITIONS		MIN	TYP	MAX	UNITS
LOGIC INPUT							
Input Logic High	V_{IH}			2.0			V
Input Logic Low	V_{IL}					0.4	V
Logic Input Current	I_{IN}	$V_{IN_}$ = 0.4V or 2.0V		-1	0.005	1	µA
SWITCH DYNAMIC CHARACTERISTICS							
Turn-On Time (Note 5)	t_{ON}	V_{NO}, V_{NC} = 2.0V, R_L = 300Ω, C_L = 35pF, Figure 2	T_A = +25°C		12	15	ns
			T_A = T_{MIN} to T_{MAX}			20	
Turn-Off Time (Note 5)	t_{OFF}	V_{NO}, V_{NC} = 2.0V, R_L = 300Ω, C_L = 35pF, Figure 2	T_A = +25°C		8	10	ns
			T_A = T_{MIN} to T_{MAX}			13	
Charge Injection	Q	V_{GEN} = 1.5V, C_L = 1.0nF, R_{GEN} = 0, Figure 3	T_A = +25°C		4		pC
NO or NC Capacitance	C_{OFF}	V_{NO}, V_{NC} = GND, f = 1MHz, Figure 5	T_A = +25°C		17		pF
COM Off-Capacitance	C_{COM}	V_{COM} = GND, f = 1MHz, Figure 5	T_A = +25°C		17		pF
COM On-Capacitance	C_{COM}	V_{COM} = V_{NO}, V_{NC} = GND, f = 1MHz, Figure 5	T_A = +25°C		38		pF
Off-Isolation (Note 7)	V_{ISO}	V_{NO} = V_{NC} = $1V_{RMS}$, R_L = 50Ω, C_L = 5pF, f = 10MHz, Figure 4	T_A = +25°C		-55		dB
		V_{NO} = V_{NC} = $1V_{RMS}$, R_L = 50Ω, C_L = 5pF, f = 1MHz, Figure 4	T_A = +25°C		-75		
POWER SUPPLY							
Positive Supply Current	I+	V+ = 3.3V, V_{IN} = 0 or V+, all channels on or off	T_A = +25°C		0.0001		µA
			T_A = T_{MIN} to T_{MAX}			1.0	

Note 2: The algebraic convention, where the most negative value is a minimum and the most positive value is a maximum, is used in this data sheet.

Note 3: SOT packages are 100% production tested at +25°C. Limits at the maximum rated temperature are guaranteed by correlation.

Note 4: Flatness is defined as the difference between the maximum and the minimum value of on-resistance as measured over the specified analog signal ranges.

Note 5: Guaranteed by design.

Note 6: Leakage parameters are 100% tested at +85°C and guaranteed by correlation at +25°C.

Note 7: Off-Isolation = $20\log_{10}(V_{COM} / V_{NO})$, V_{COM} = output, V_{NO} = input to off switch.

Typical Operating Characteristics

(T_A = +25°C, unless otherwise noted.)

ON-RESISTANCE vs. V_{COM} AND SUPPLY VOLTAGE

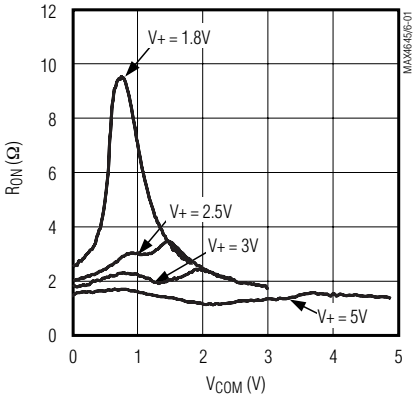

ON-RESISTANCE vs. V_{COM} AND TEMPERATURE

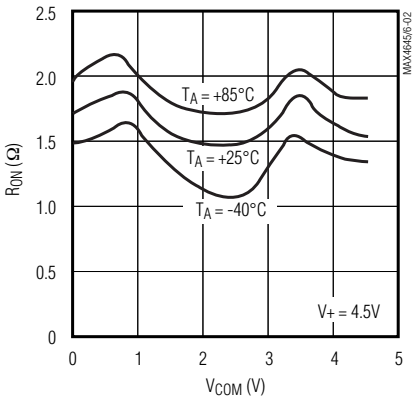

ON/OFF-LEAKAGE CURRENT vs. TEMPERATURE

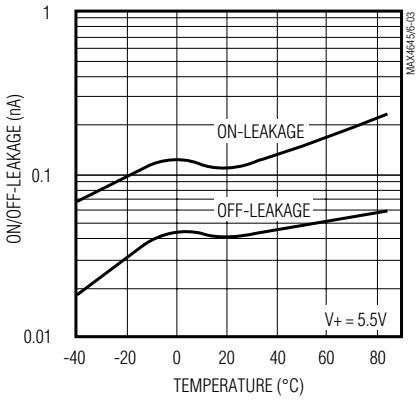

SUPPLY CURRENT vs. SUPPLY VOLTAGE AND TEMPERATURE

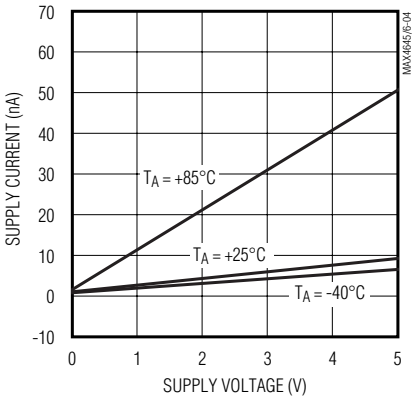

TURN-ON/TURN-OFF TIME vs. TEMPERATURE

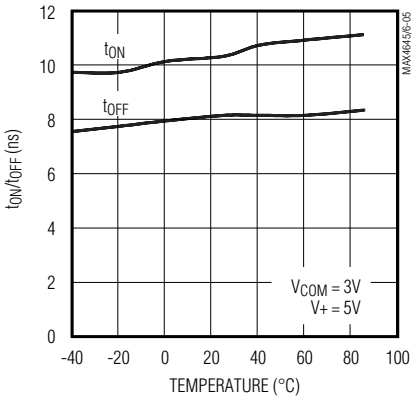

TURN-ON/TURN-OFF TIME vs. V_{COM}

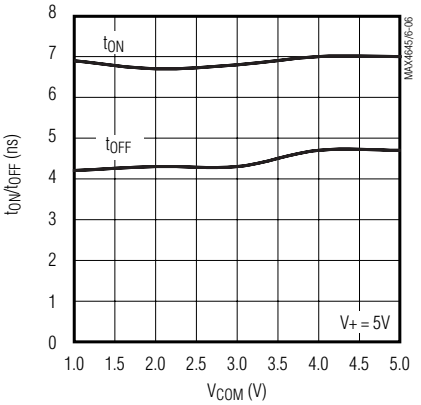

CHARGE INJECTION vs. V_{COM}

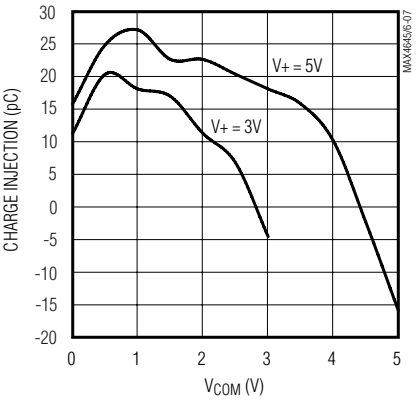

TOTAL HARMONIC DISTORTION vs. FREQUENCY

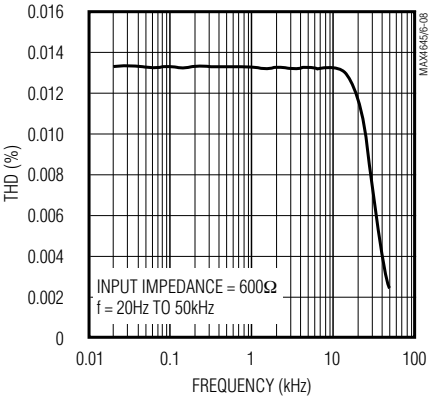

FREQUENCY RESPONSE

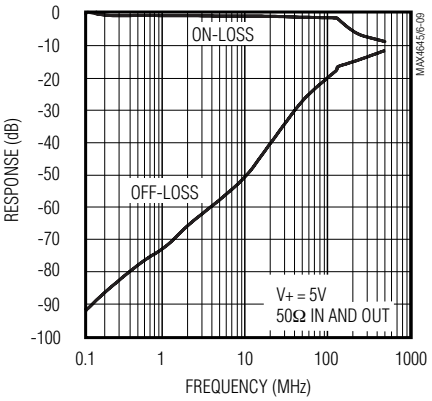

Fast, Low-Voltage, 2.5Ω, SPST, CMOS Analog Switches

Pin Description

PIN						NAME	FUNCTION
MAX4645			MAX4646				
SOT23-5	SOT23-6	μMAX	SOT23-5	SOT23-6	μMAX		
1	1	1	1	1	1	COM	Analog Switch Common Terminal
2	2	8	—	—	—	NO	Analog Switch Normally Open Terminal
—	—	—	2	2	8	NC	Analog Switch Normally Closed Terminal
3	3	7	3	3	7	GND	Ground
4	4	6	4	4	6	IN	Logic Control Input
—	5	2, 3, 5	—	5	2, 3, 5	N.C.	No Connection. Not internally connected.
5	6	4	5	6	4	V+	Positive Supply Voltage

Detailed Description

The MAX4645/MAX4646 are low 2.5Ω max on-resistance (at V+ = 5V), low-voltage analog switches that operate from a +1.8V to +5.5V single supply. CMOS switch construction allows processing analog signals that are within the supply voltage range (GND to V+).

Applications Information

Proper power-supply sequencing is recommended for all CMOS devices. Do not exceed the absolute maximum ratings because stresses beyond the listed ratings can cause permanent damage to the devices. Always sequence V+ on first, followed by the logic inputs, NO, or COM. If power-supply sequencing is not possible, add two small signal diodes (D1, D2) in series with the supply pins for overvoltage protection (Figure 1). Adding these diodes reduces the analog signal by one diode drop below V+ and one diode drop above GND, but does not affect the low switch resistance and low leakage characteristics of the device. Device operation is unchanged, and the difference between V+ and GND should not exceed 6V.

Although it is not required, power-supply bypassing improves noise margin and prevents switching noise from propagating from the V+ supply to other components. A 0.1μF capacitor, connected from V+ to GND, is adequate for most applications.

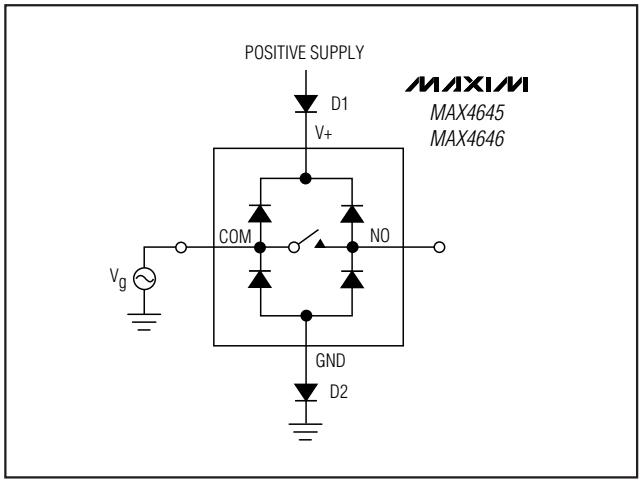

Figure 1. Overvoltage Protection Using Two External Blocking Diodes

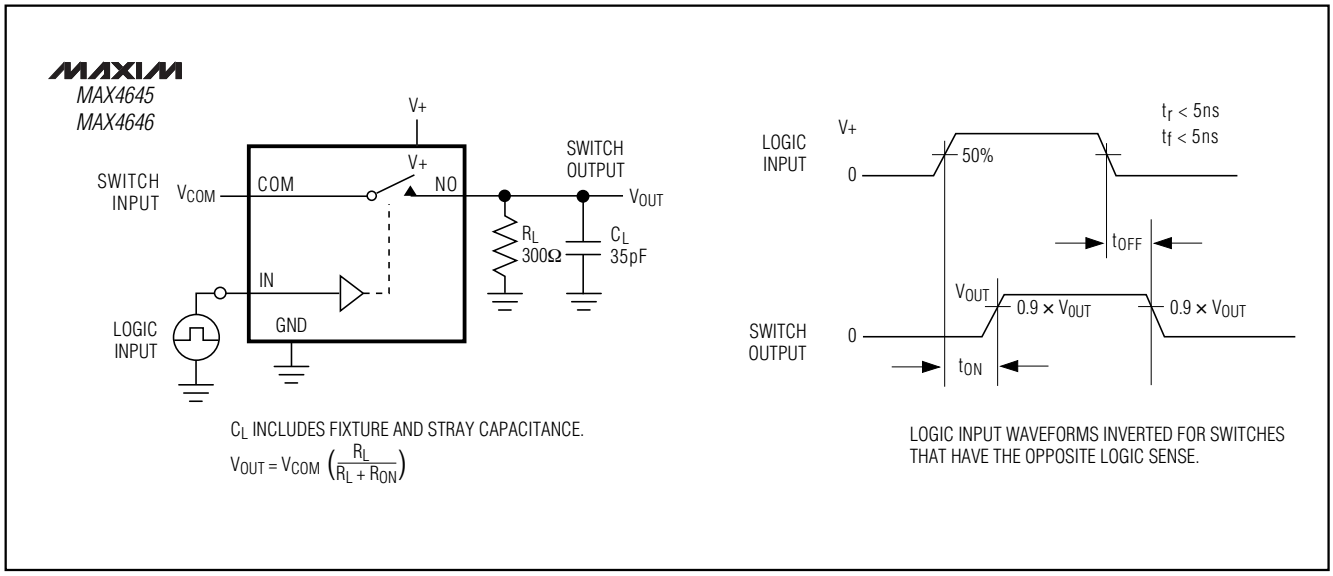

Figure 2. Switching Time

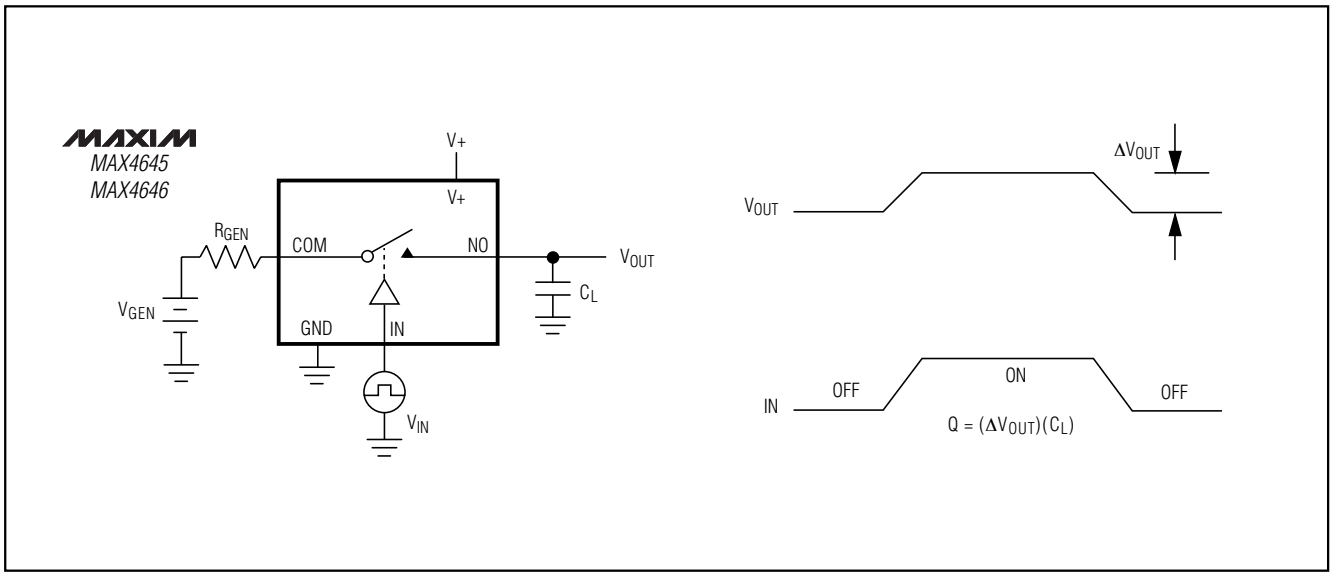

Figure 3. Charge Injection

Fast, Low-Voltage, 2.5Ω, SPST, CMOS Analog Switches

Test Circuits/Timing Diagrams (continued)

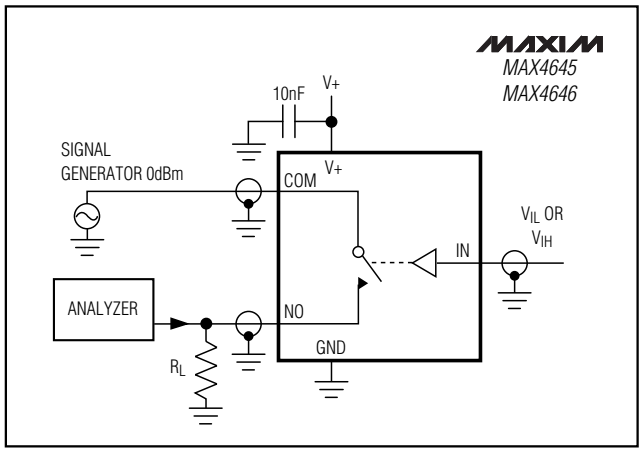

Figure 4. Off-Isolation/On-Channel Bandwidth

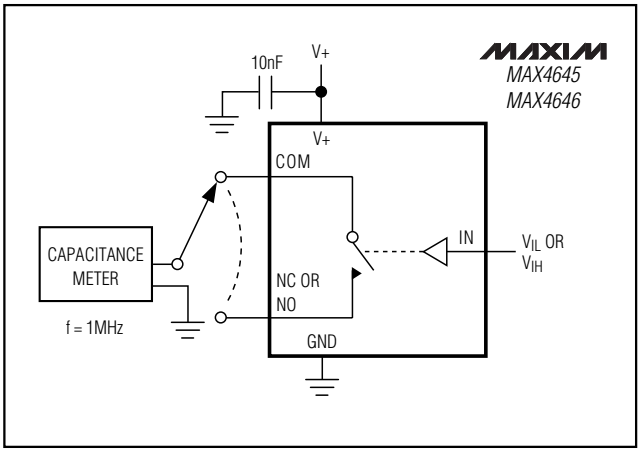

Figure 5. Channel Off/On-Capacitance

Pin Configurations/Functional Diagrams/Truth Tables (continued)

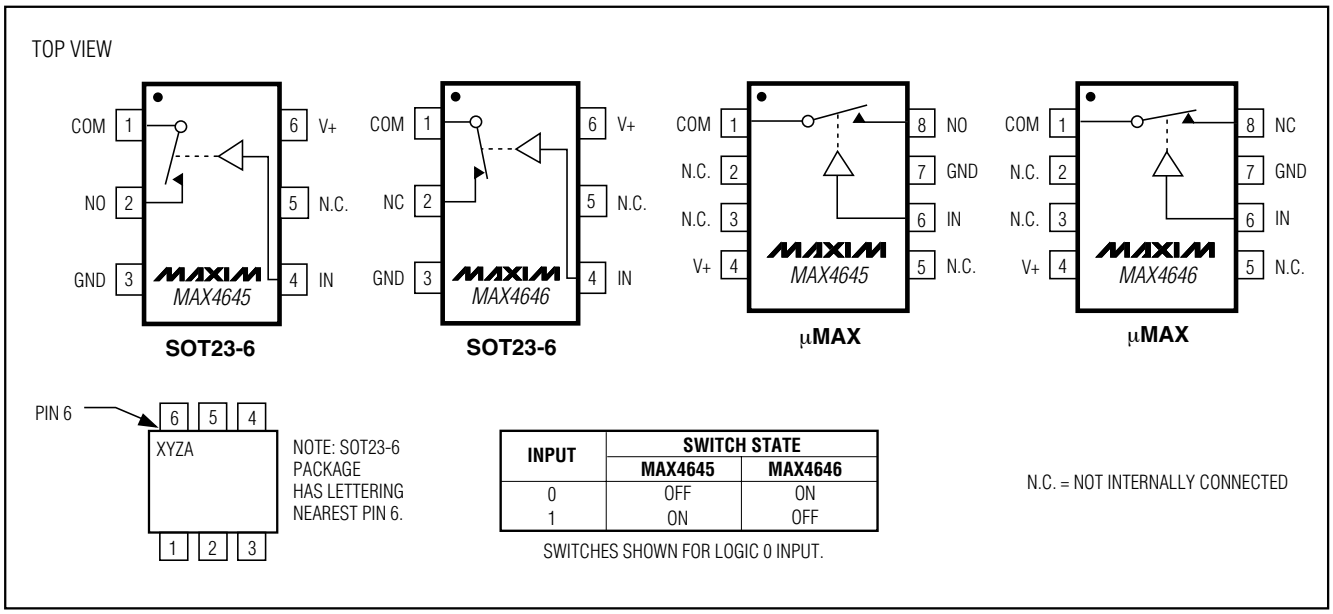

INPUT	SWITCH STATE	
	MAX4645	MAX4646
0	OFF	ON
1	ON	OFF

SWITCHES SHOWN FOR LOGIC 0 INPUT.

Chip Information

TRANSISTOR COUNT: 50

Package Information

(The package drawing(s) in this data sheet may not reflect the most current specifications. For the latest package outline information go to **www.maxim-ic.com/packages**.)

SOT-23 5L .EPS

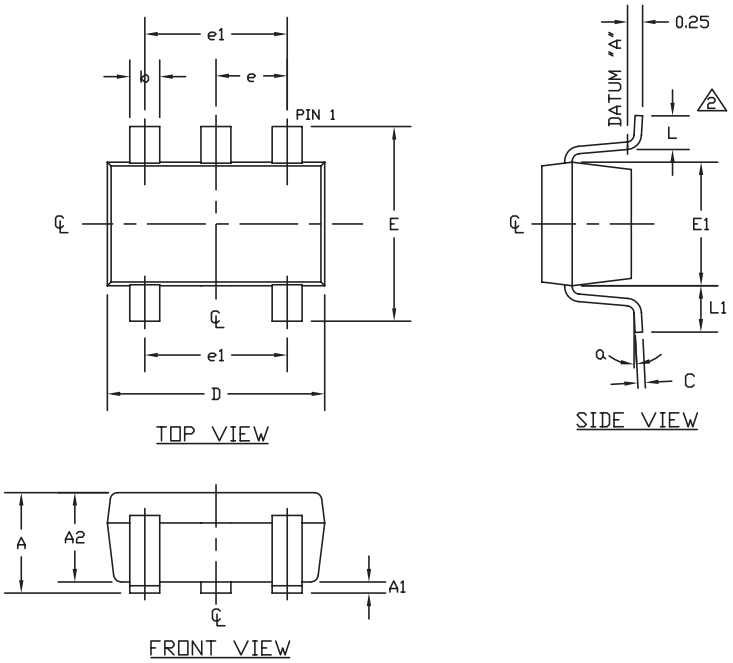

SYMBOL	MIN	MAX
A	0.90	1.45
A1	0.00	0.15
A2	0.90	1.30
b	0.35	0.50
C	0.08	0.20
D	2.80	3.00
E	2.60	3.00
E1	1.50	1.75
L	0.35	0.60
L1	0.60 REF	
e	0.95 BSC.	
e1	1.90 BSC.	
a	0°	8°

NOTES:
1. ALL DIMENSIONS ARE IN MILLIMETERS.
2. FOOT LENGTH MEASURED AT INTERCEPT POINT BETWEEN DATUM A & LEAD SURFACE.
3. PACKAGE OUTLINE EXCLUSIVE OF MOLD FLASH & METAL BURR. MOLD FLASH, PROTRUSION OR METAL BURR SHOULD NOT EXCEED 0.25 MM.
4. PACKAGE OUTLINE INCLUSIVE OF SOLDER PLATING.
5. MEETS JEDEC MO178, VARIATION AA.
6. LEADS TO BE COPLANAR WITHIN 0.10 mm.
7. SOLDER THICKNESS MEASURED AT FLAT SECTION OF LEAD BETWEEN 0.08mm AND 0.15mm FROM LEAD TIP.

DALLAS SEMICONDUCTOR MAXIM
PROPRIETARY INFORMATION

TITLE: PACKAGE OUTLINE, SOT-23, 5L

APPROVAL	DOCUMENT CONTROL NO.	REV.	
	21-0057	E	1/1

Fast, Low-Voltage, 2.5Ω, SPST, CMOS Analog Switches

Package Information (continued)

(The package drawing(s) in this data sheet may not reflect the most current specifications. For the latest package outline information go to **www.maxim-ic.com/packages**.)

6LSOT.EPS

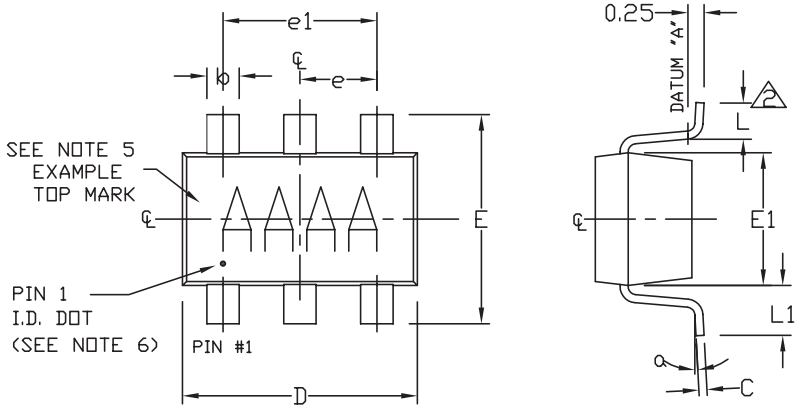

SYMBOL	MIN	MAX
A	0.90	1.45
A1	0.00	0.15
A2	0.90	1.30
b	0.35	0.50
C	0.08	0.20
D	2.80	3.00
E	2.60	3.00
E1	1.50	1.75
L	0.35	0.60
L1	0.60 REF.	
e1	1.90 BSC.	
e	0.95 BSC.	
α	0°	10°

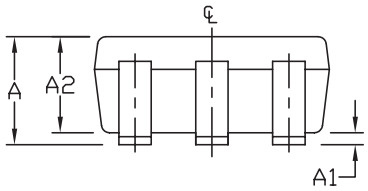

NOTES:
1. ALL DIMENSIONS ARE IN MILLIMETERS.
2. FOOT LENGTH MEASURED AT INTERCEPT POINT BETWEEN DATUM A & LEAD SURFACE.
3. PACKAGE OUTLINE EXCLUSIVE OF MOLD FLASH & METAL BURR. MOLD FLASH, PROTRUSION OR METAL BURR SHOULD NOT EXCEED 0.25 MM.
4. PACKAGE OUTLINE INCLUSIVE OF SOLDER PLATING.
5. PIN 1 IS LOWER LEFT PIN WHEN READING TOP MARK FROM LEFT TO RIGHT. (SEE EXAMPLE TOP MARK)
6. PIN 1 I.D. DOT IS 0.3 MM ø MIN. LOCATED ABOVE PIN 1.
7. MEETS JEDEC MO178, VARIATION AB.
8. SOLDER THICKNESS MEASURED AT FLAT SECTION OF LEAD BETWEEN 0.08mm AND 0.15mm FROM LEADTIP.
9. LEAD TO BE COPLANAR WITHIN 0.1 MM.

DALLAS SEMICONDUCTOR MAXIM
PROPRIETARY INFORMATION

TITLE: PACKAGE OUTLINE, SOT-23, 6L

APPROVAL	DOCUMENT CONTROL NO.	REV.	
	21-0058	F	1/1

Package Information (continued)

(The package drawing(s) in this data sheet may not reflect the most current specifications. For the latest package outline information go to **www.maxim-ic.com/packages**.)

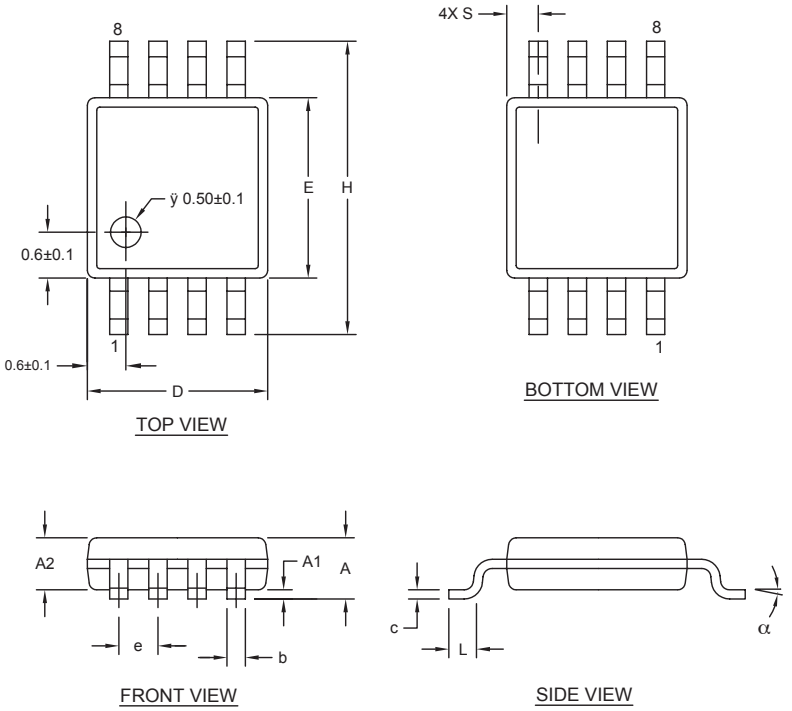

DIM	INCHES MIN	INCHES MAX	MILLIMETERS MIN	MILLIMETERS MAX
A	-	0.043	-	1.10
A1	0.002	0.006	0.05	0.15
A2	0.030	0.037	0.75	0.95
b	0.010	0.014	0.25	0.36
c	0.005	0.007	0.13	0.18
D	0.116	0.120	2.95	3.05
e	0.0256 BSC		0.65 BSC	
E	0.116	0.120	2.95	3.05
H	0.188	0.198	4.78	5.03
L	0.016	0.026	0.41	0.66
α	0∞	6∞	0∞	6∞
S	0.0207 BSC		0.5250 BSC	

8LUMAXD.EPS

NOTES:
1. D&E DO NOT INCLUDE MOLD FLASH.
2. MOLD FLASH OR PROTRUSIONS NOT TO EXCEED 0.15MM (.006").
3. CONTROLLING DIMENSION: MILLIMETERS.
4. MEETS JEDEC MO-187C-AA.

DALLAS SEMICONDUCTOR MAXIM

PROPRIETARY INFORMATION

TITLE: PACKAGE OUTLINE, 8L uMAX/uSOP

APPROVAL	DOCUMENT CONTROL NO.	REV.	
	21-0036	J	1/1

Note: *The MAX4645/MAX4646 do not have an exposed paddle.*

Maxim cannot assume responsibility for use of any circuitry other than circuitry entirely embodied in a Maxim product. No circuit patent licenses are implied. Maxim reserves the right to change the circuitry and specifications without notice at any time.

© 2004 Maxim Integrated Products Printed USA MAXIM is a registered trademark of Maxim Integrated Products.