Mounting adaptor for encoders with clamping flange

Part number	
10125051	Mounting adaptor for encoders with clamping flange

Suitable for
BDH, BDH - *HighRes*

Dimensions

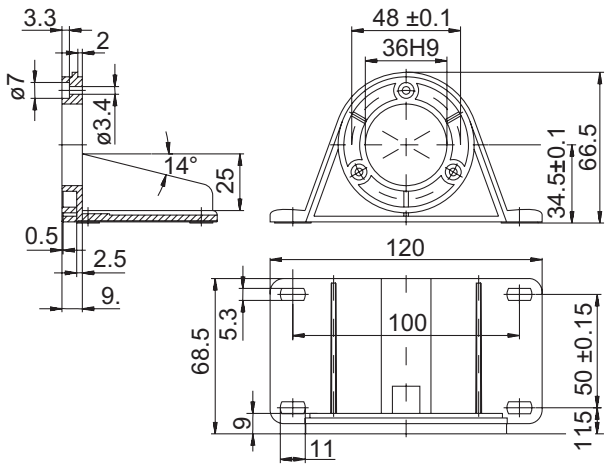

17/1/2012 Subject to modification in technic and design. Errors and omissions excepted.