NPN 2N5320 – 2N5321

SILICON PLANAR EPITAXIAL TRANSISTORS

The 2N5320 and 2N5321 are NPN transistors mounted in TO-39 metal case .
They are especially intended for high-voltage medium power applications in industrial and commercial equipements.
Compliance to RoHS

ABSOLUTE MAXIMUM RATINGS

Symbol	Ratings			Value	Unit
V_{CEO}	Collector-Emitter Voltage (I_B = 0)		2N5320	75	V
			2N5321	50	
V_{CBO}	Collector-Base Voltage (I_E = 0)		2N5320	100	V
			2N5321	75	
V_{CEV}	Collector-Emitter Voltage (V_{BE} = 1.5V)		2N5320	100	V
			2N5321	75	
V_{EBO}	Emitter-Base Voltage (I_C = 0)		2N5320	6	V
			2N5321	5	
I_C	Collector Current		2N5320	2	A
			2N5321		
I_B	Base Current		2N5320	1	A
			2N5321		
P_D	Total Power Dissipation	@ T_{amb} = 25°	2N5320	1	Watts
			2N5321		
		@ T_{case}= 25°	2N5320	10	
			2N5321		
T_J	Junction Temperature		2N5320	-65 to +200	℃
			2N5321		
T_{Stg}	Storage Temperature range		2N5320	-65 to +200	℃
			2N5321		

THERMAL CHARACTERISTICS

Symbol	Ratings	Value	Unit
R_{thJ-a}	Thermal Resistance, Junction to ambient	175	℃/W
R_{thJ-c}	Thermal Resistance, Junction to case	17.5	℃/W

NPN 2N5320 – 2N5321

ELECTRICAL CHARACTERISTICS

TC=25℃ unless otherwise noted

Symbol	Ratings	Test Condition(s)		Min	Typ	Max	Unit
I_{CBO}	Collector Cutoff Current	V_{CB} = 80 V, I_E =0	2N5320	-	-	0.5	µA
		V_{CB} = 60 V, I_E =0	2N5321	-	-	5	
I_{EBO}	Emitter Cutoff Current	V_{EB} = 5 V, I_C =0	2N5320	-	0.1	-	µA
		V_{EB} = 4 V, I_C =0	2N5321	-	0.5	-	
V_{CEO}	Collector Emitter Breakdown Voltage	I_C = 10 mA, I_B =0	2N5320	75	-	-	V
			2N5321	50	-	-	
V_{CEV}	Collector Emitter Breakdown Voltage	I_C = 100 µA V_{BE} = 1.5V	2N5320	100	-	-	V
			2N5321	75	-	-	
V_{EBO}	Emitter Base Breakdown Voltage	I_E = 100 µA, I_C =0	2N5320	6	-	-	V
			2N5321	5	-	-	
h_{FE} (*)	DC Current Gain	I_C = 500 mA V_{CE} = 4 V	2N5320	30	-	130	-
			2N5321	40	-	250	
		I_C = 1 A V_{CE} = 2 V	2N5320	10	-	-	
$V_{CE(SAT)}$ (*)	Collector-Emitter saturation Voltage	I_C = 500 mA I_B = 50 mA	2N5320	-	-	0.5	V
			2N5321	-	-	0.8	
V_{BE} (*)	Base-Emitter Voltage	I_C = 500 mA V_{CE} = 4 V	2N5320	-	-	1.1	V
			2N5321	-	-	1.4	
f_T	Transition frequency	I_C = 50 mA V_{CE} = 4 V f = 10 MHz	2N5320	50	-	-	MHz
			2N5321				
t_{on}	Turn-on Time	I_C = 500 mA V_{CC} = 30 V I_{B1} = 50 mA	2N5320	-	-	80	ns
			2N5321				
t_{off}	Turn-off Time	I_C = 500 mA V_{CC} = 30 V I_{B1} = -I_{B2} = 50 mA	2N5320	-	-	800	ns
			2N5321				

(*) Pulse conditions : tp < 300 µs, δ =1%

NPN 2N5320 – 2N5321

MECHANICAL DATA CASE TO-39

DIMENSIONS (mm)		
	min	max
A	8.50	9.39
B	7.74	8.50
C	6.09	6.60
D	0.40	0.53
E	-	0.88
F	2.41	2.66
G	4.82	5.33
H	0.71	0.86
J	0.73	1.02
K	12.70	-
L	42°	48°

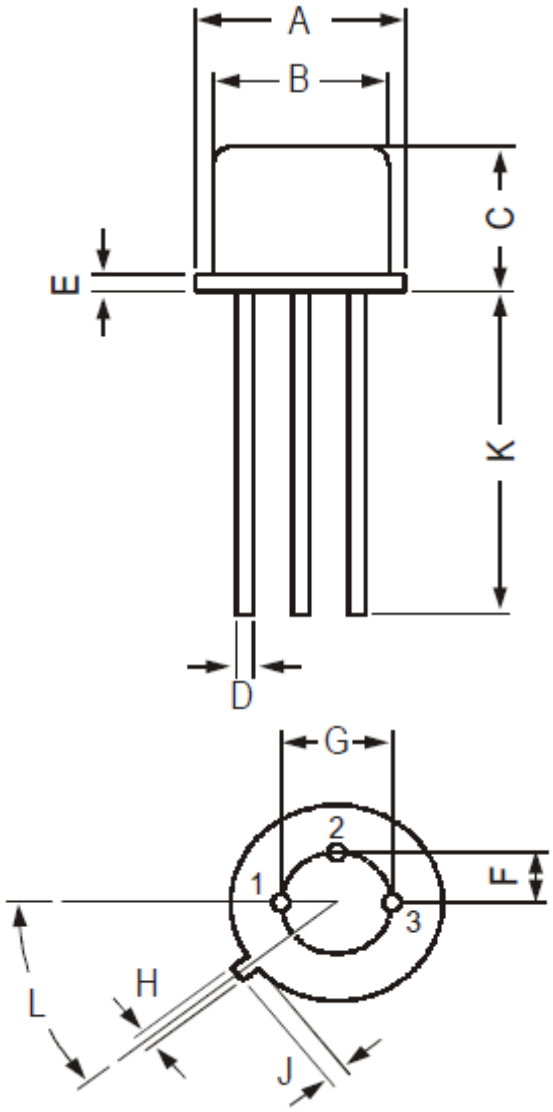

Pin 1 :	Emitter
Pin 2 :	Base
Pin 3 :	Collector
Case :	Collector

Revised September 2012