NPN 2N1613 – 2N1711

SILICON PLANAR EPITAXIAL TRANSISTORS

The 2N1613 and 2N1711 are NPN transistors mounted in TO-39 metal package with the collector connected to the case .
They are designed for use in high-performance amplifier, oscillator and switching circuits.
The 2N1711 is also used to advantage in amplifiers where low noise is an important factor.
Compliance to RoHS.

ABSOLUTE MAXIMUM RATINGS

Symbol	Ratings		Value	Unit
V_{CBO}	Collector-Base Voltage		75	V
V_{CER}	Collector-Emitter Voltage (R_{BE} = 10Ω)		50	V
V_{EBO}	Emitter-Base Voltage		7	V
I_C	Collector Current		5	mA
I_{CM}	Peak Collector Current		1	A
I_{BM}	Peak Base Current		200	mA
P_D	Total Power Dissipation	@ T_{case}= 25°	3	W
		@ T_{case}= 100°	1.7	W
		@ T_{amb}= 25°	0.8	W
T_J	Junction Temperature		200	℃
T_{Stg}	Storage Temperature range		-65 to +150	℃

THERMAL CHARACTERISTICS

Symbol	Ratings	Value	Unit
R_{thJ-c}	Thermal Resistance, Junction-case	58	℃/ W
$R_{thJ-amb}$	Thermal Resistance, Junction-ambient	219	℃/ W

NPN 2N1613 – 2N1711

ELECTRICAL CHARACTERISTICS

TC=25℃ unless otherwise noted

Symbol	Ratings	Test Condition(s)		Min	Typ	Max	Unit
I_{CBO}	Collector Cutoff Current	V_{CE}=60 V, I_E=0		-	-	10	nA
		V_{CE}=60 V, I_E=0 T_{amb} = 150℃		-	-	10	µA
I_{EB0}	Emitter Cutoff Current	V_{EB}=5 V	2N1613	-	-	10	nA
		V_{EB}=5 V	2N1711	-	-	5	
V_{CBO}	Collector Base Breakdown Voltage	I_C=0.1 mA		75	-	-	V
V_{EBO}	Emitter Base Breakdown Voltage	I_E=100 µA , I_C=0		7	-	-	V
$V_{CE(SAT)}$(*)	Collector-Emitter saturation Voltage	I_C=150 mA , I_B=15 mA		-	-	1.5	V
$V_{BE(SAT)}$(*)	Base-Emitter saturation Voltage	I_C=150 mA, I_B=15 mA		-	-	1.3	V
h_{FE}(*)	DC Current Gain	I_C=0.1 mA, V_{CE}=10 V	2N1613	20	-	-	-
		I_C=10 mA, V_{CE}=10 V		35	-	-	
		I_C=150 mA, V_{CE}=10 V		40	-	120	
		I_C=500 mA, V_{CE}=10 V		20	-	-	
		I_C=10 µA, V_{CE}=10 V	2N1711	20	-	-	
		I_C=0.1 mA, V_{CE}=10 V		35	-	-	
		I_C=10 mA, V_{CE}=10 V		75	-	-	
		I_C=150 mA, V_{CE}=10 V		100	-	300	
		I_C=500 mA, V_{CE}=10 V		40	-	-	

Symbol	Ratings	Test Condition(s)		Min	Typ	Mx	Unit
f_T	Transition Frequency	I_C=50 mA, V_{CE}=10 V, f= 100MHz	2N1613	60	-	-	MHz
			2N1711	70	-	-	
C_{CBO}	Collector-Base Capacitance	I_E= 0, V_{CB}= 10 V, f = 1MHz		-	-	25	pF
C_{EBO}	Emitter-Base Capacitance	I_C= 0, V_{EB}= 0.5V, f = 1MHz		-	-	80	pF
NF	Noise Figure	I_C= 0.3 mA, V_{CE}= 10 V f = 1 kHz, R_g= 510 Ω	2N1613	-	-	12	dB
		I_C= 0.3 mA, V_{CE}= 10 V f = 1 kHz, R_g= 510 Ω	2N1711	-	-	8	

(*) Pulse conditions : tp < 300 µs, δ =2%.

NPN 2N1613 – 2N1711

MECHANICAL DATA CASE TO-39

DIMENSIONS (mm)		
	min	max
A	8.50	9.39
B	7.74	8.50
C	6.09	6.60
D	0.40	0.53
E	-	0.88
F	2.41	2.66
G	4.82	5.33
H	0.71	0.86
J	0.73	1.02
K	12.70	-
L	42°	48°

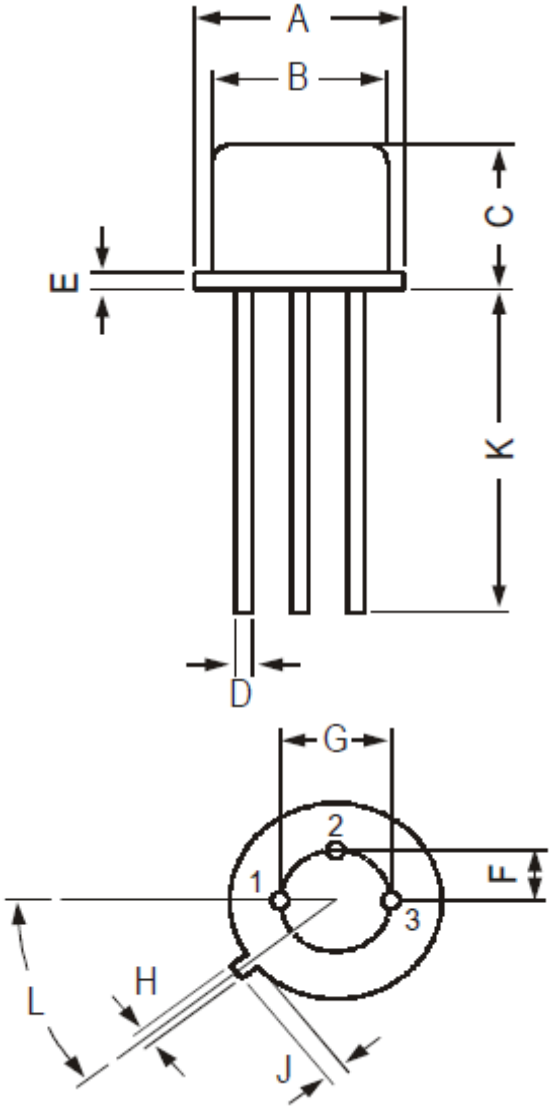

Pin 1 :	Emitter
Pin 2 :	Base
Pin 3 :	Collector
Case :	Collector

Revised August 2012

Information furnished is believed to be accurate and reliable. However, Comset Semiconductors assumes no responsibility for the consequences of use of such information nor for any infringement of patents or other rights of third parties which may results from its use. Data are subject to change without notice. Comset Semiconductors makes no warranty, representation or guarantee regarding the suitability of its products for any particular purpose, nor does Comset Semiconductors assume any liability arising out of the application or use of any product and specifically disclaims any and all liability, including without limitation consequential or incidental damages. Comset Semiconductors' products are not authorized for use as critical components in life support devices or systems.