Ordering number : EN5974B

LB1980H

ON Semiconductor®

http://onsemi.com

Monolithic Digital IC

For VCR Capstan Motors

3-Phase Brushless Motor Driver

Overview

The LB1980JH is a 3-phase brushless motor driver that is particularly appropriate for VCR capstan motor drivers.

Functions

- 3-phase full-wave drive
- Built-in torque ripple correction circuit (variable correction ratio)
- Current limiter circuit
- Upper and lower side output stage over-saturation prevention circuit that does not require external capacitors.
- FG amplifier
- Thermal shutdown circuit

Specifications

Absolute Maximum Ratings at Ta = 25°C

Parameter	Symbol	Conditions	Ratings	Unit
Maximum supply voltage	V_{CC} max		7	V
	V_S max		24	V
Maximum output current	I_O max		1.3	A
Allowable power dissipation	Pd max	Mounted on a board *	1.81	W
		Independent IC	0.77	W
Operating temperature	Topr		-20 to 75	°C
Storage temperature	Tstg		-55 to +150	°C

* Mounted on a 76.1mm×114.3mm×1.6mm, glass epoxy printed circuit board.

Stresses exceeding Maximum Ratings may damage the device. Maximum Ratings are stress ratings only. Functional operation above the Recommended Operating Conditions is not implied. Extended exposure to stresses above the Recommended Operating Conditions may affect device reliability.

Semiconductor Components Industries, LLC, 2013

Allowable Operating Ranges at Ta = 25°C

Parameter	Symbol	Conditions	Ratings	Unit
Supply voltage	V_S		5 to 22	V
	V_{CC}		4.5 to 5.5	V
Hall input amplitude	V_{HALL}	Between the hall inputs	±30 to ±80	mVo-p
GSENSE pin input range	V_{GSENSE}	With respect to the control system ground	-0.20 to +0.20	V

Electrical Characteristics at Ta = 25°C, V_{CC} = 5V, V_S = 15V

Parameter	Symbol	Conditions	Ratings			Unit
			min	typ	max	
V_{CC} supply current	I_{CC}	R_L=∞, V_{CTL}=0V, V_{LIM}=0V (Quiescent)		12	18	mA
Outputs						
Output saturation voltage	VO sat1	I_O=500mA, Rf=0.5Ω, Sink+Source V_{CTL}=V_{LIM}=5V(With saturation prevention)		2.1	2.6	V
	VO sat2	I_O=1.0mA, Rf=0.5Ω, Sink+Source V_{CTL}=V_{LIM}=5V(With saturation prevention)		2.6	3.5	V
Output leakage current	I_O leak				1.0	mA
FR						
FR pin input threshold voltage	V_{FSR}		2.25	2.50	2.75	V
FR pin input bias current	I_B(FSR)		-5.0			mA
Control						
CTLREF pin voltage	V_{CREF}		2.05	2.15	2.25	V
CTLREF pin input range	V_{CREFIN}		1.50		3.50	V
CTL pin input bias current	I_B(CTL)	With V_{CTL}=5V and the CTLREF pin open			4.0	µA
CTL pin control start voltage	V_{CTL}(ST)	With Rf=0.5Ω, V_{LIM}=5V, I_O≥10mA, Hall input logic fixed (U, V, W=H, H, L)	2.00	2.15	2.30	V
CTL pin control Gm	Gm(CTL)	With Rf=0.5Ω, ∆I_O=200mA, Hall input logic fixed (U, V, W=H, H, L)	0.46	0.58	0.70	A / V
Current Limiter						
LIM current limit offset voltage	Voff(LIM)	With Rf=0.5Ω, V_{CTL}=5V, I_O≥10mA, Hall input logic fixed (U, V, W=H, H, L)	140	200	260	mV
LIM pin input bias current	I_B(LIM)	With V_{CTL}=5V and the V_{CREF} pin open	-2.5			µA
LIM pin current control level	I_{LIM}	With Rf=0.5Ω, V_{CTL}=5V, V_{LIM}=2.06V Hall input logic fixed (U, V, W=H, H, L)	830	900	970	mA
Hall Amplifier						
Hall amplifier input offset voltage	Voff(HALL)		-6		+6	mA
Hall amplifier input bias current	I_B(HALL)			1.0	3.0	µA
Hall amplifier common-mode input voltage range	V_{CM}(HALL)			1.3	3.3	V
TRC						
Torque ripple correction ratio	TRC	For the high and low peaks in the Rf waveform when I_O=200mA. (Rf=0.5Ω, with the ADJ pin open) *1		9		%
ADJ pin voltage	V_{ADJ}		2.37	2.50	2.63	V
FG Amplifier						
FG amplifier input offset voltage	Voff(FG)		-8		+8	mV
FG amplifier input bias current	I_B(FG)		-100			nA
FG amplifier output saturation voltage	V_O sat (FG)	Sink side, for the load provided by the internal pull-up resistor			0.5	V
FG amplifier voltage gain	V_G(FG)	For the open loop state with f=10kHz	41.5	44.5	47.5	dB
FG amplifier common-mode input voltage	V_{GM}(FG)		0.5		4.0	V
Saturation						
Saturation prevention circuit lower side voltage setting	VO sat(DET)	The voltages between each OUT and Rf pair when I_O=10mA, Rf=0.5Ω, and V_{CTL}=V_{LIM}=5V	0.175	0.25	0.325	V
TSD						
TSD operating temperature	TSD	Design target value *2		180		°C
Hysteresis width	∆TSD	Design target value *2		20		°C

Notes : *1. The torque ripple correction ratio is determined as follows from the Rf voltage waveform.

*2. Parameters that are indicated as design target values in the conditions column are not tested.

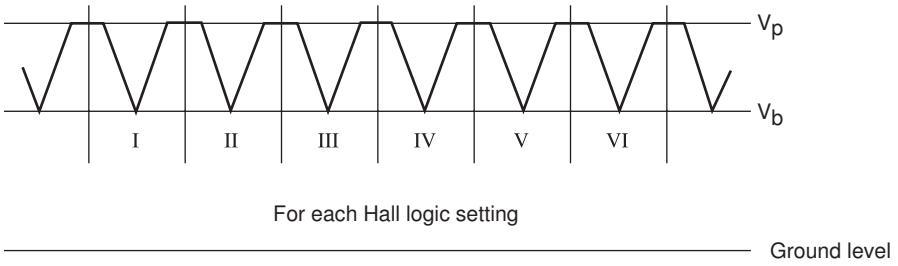

$$\text{Correction ratio} = \frac{25(V_p - V_b)}{V_p - V_b} 1005(\%)$$

Package Dimensions

unit : mm (typ)
3233B

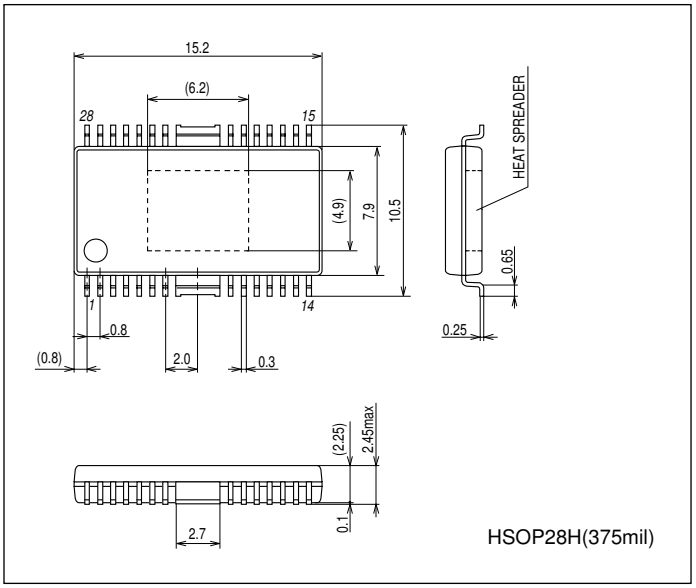

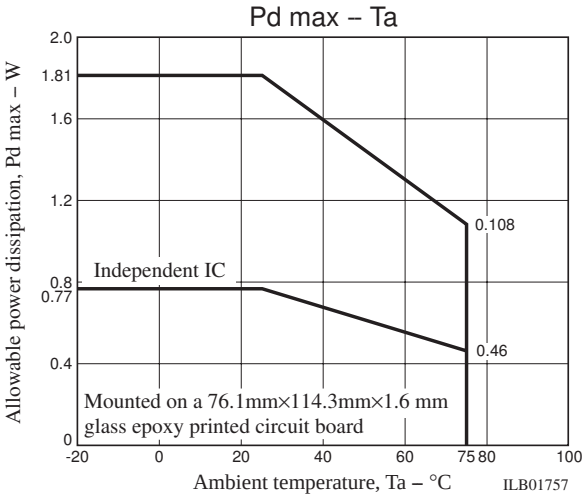

Pin Assignment

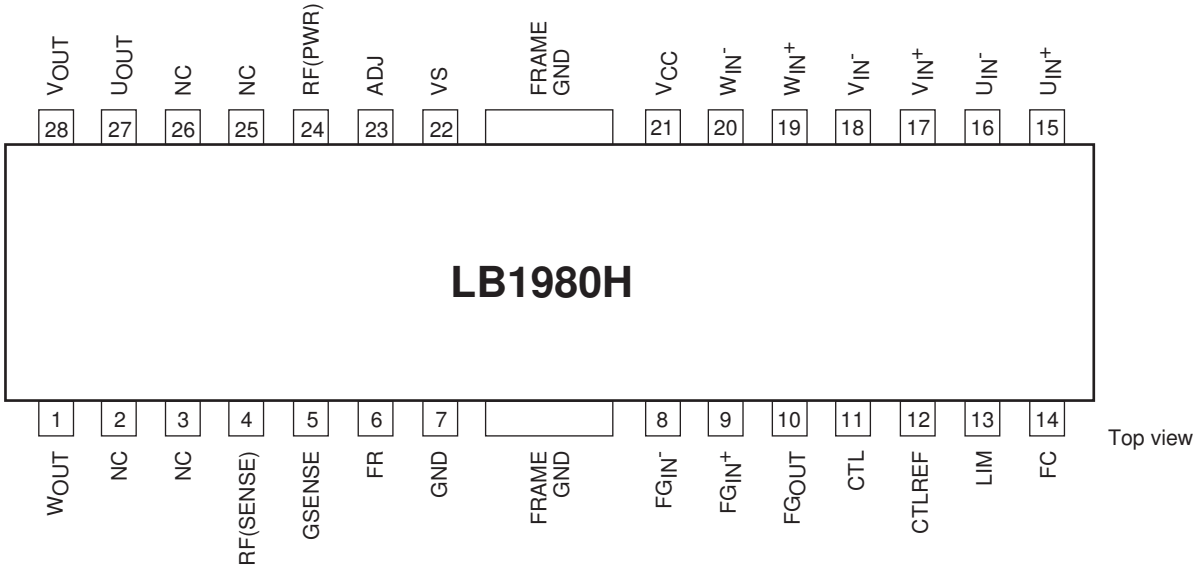

Block Diagram

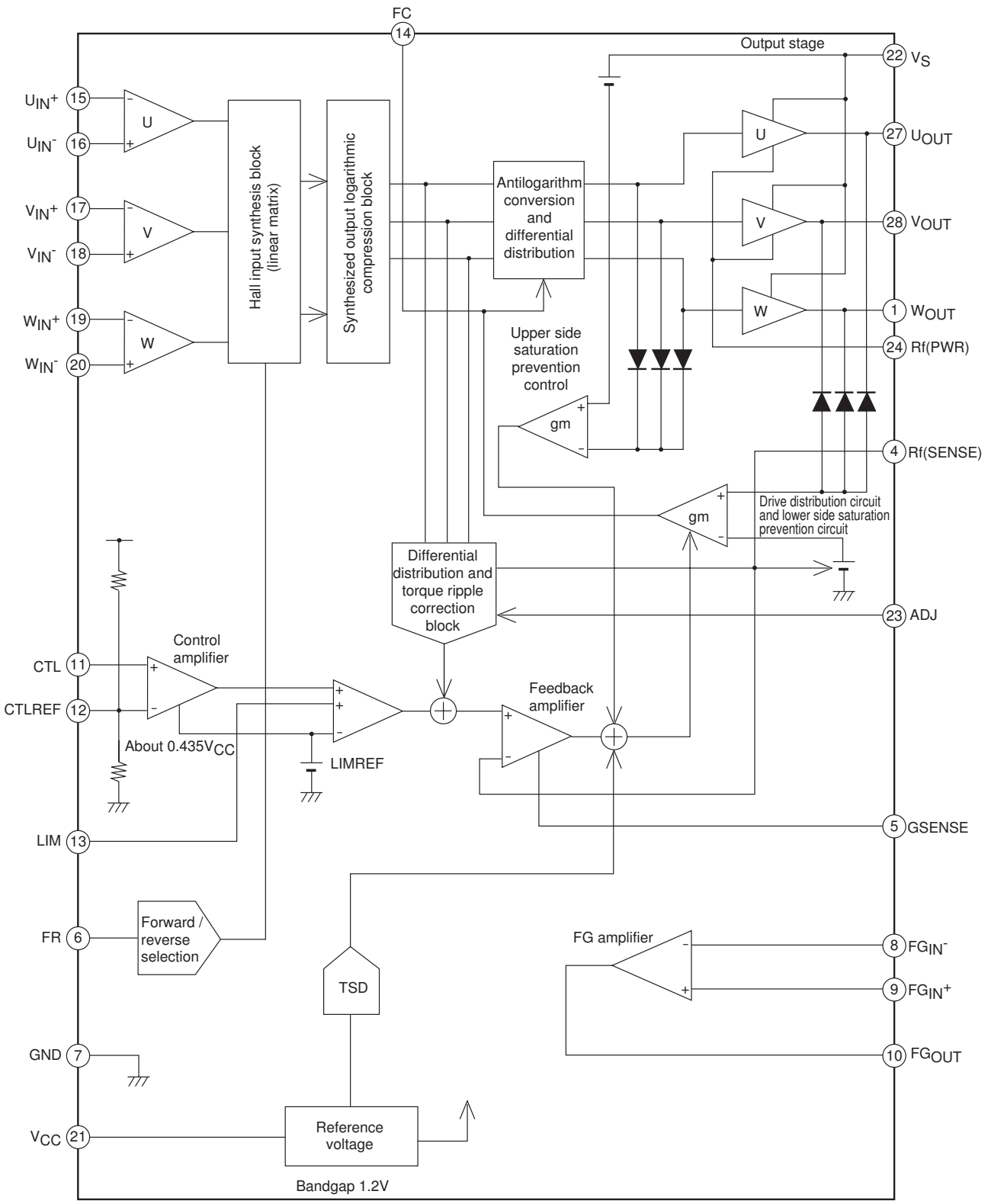

Pin Function

Pin No.	Pin Name	Function	Equivalent circuit
27 28 1	U_{OUT} V_{OUT} W_{OUT}	U phase output, Spark killer diodes are built-in. V phase output, Spark killer diodes are built-in. W phase output, Spark killer diodes are built-in.	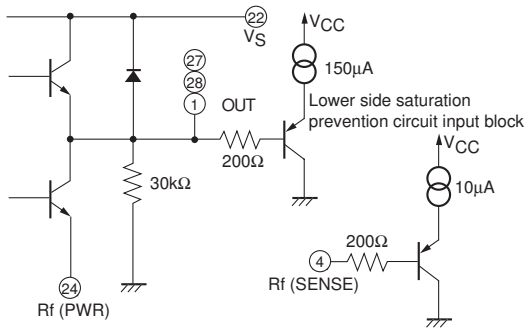
4 5	Rf (SENSE) Rf (PWR)	Output current detection. The control block current limiter operates using the resistor Rf connected between these pins and ground. Also, the lower side saturation prevention circuit and the torque ripple correction circuit operate based on the voltages across this resistor. It is especially important to note that, since the saturation prevention level is set using this voltage, the lower side saturation prevention circuit will become less effective in the high current region if the value of Rf is lowered excessively. Also, the PWR and SENSE pins must be connected together.	
22	V_S	Output block power supply	
5	GSENSE	Ground sensing. The influence of the common ground impedance on Rf can be excluded by connecting this pin to nearest ground for the Rf resistor side of the motor ground wiring that includes Rf. (This pin must not be left open.)	
6	FR	Forward / reverse selection. The voltage applied to this pin selects the motor direction (forward or reverse). (Vth=2.5V at V_{CC}=5V (typical))	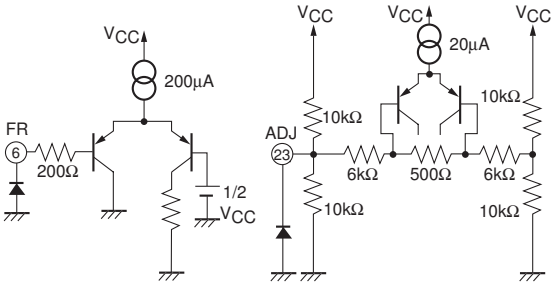
23	ADJ	Used for external adjustment of the torque ripple correction ratio. Apply a voltage externally with a low-impedance circuit to the ADJ pin to adjust the correction ratio. The correction ratio falls as the applied voltage is increased, and increases as the applied voltage decreases. The torque ripple correction ratio can be modified by factors in the range 0 to 2 times the ratio that applies when his pin is left open. (The pin voltage is set to about V_{CC} / 2 internally, and the input impedance is about 5kΩ.)	
7	GND	Ground for all circuits other than the output transistors. The lowest potential of the output transistors is that of the Rf pin.	
8	FG_{IN}^-	Input used when the FG amplifier is used as an inverting input. A feedback resistor must be connected between FG_{OUT} and this pin.	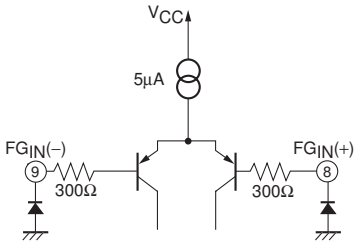
9	FG_{IN}^+	Non-inverting input used when the FG amplifier is used as a differential input amplifier. No bias is applied internally.	
10	FG_{OUT}	FG amplifier output. There is an internal resistive load.	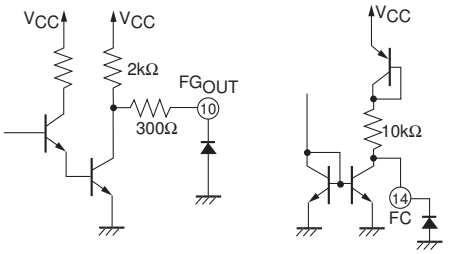
14	FC	Speed control loop frequency characteristics correction.	

Continued on next page.

Continued from preceding page.

Pin No.	Pin Name	Function	Equivalent circuit
11	CTL	Speed control input. The control implemented is fixed current drive controlled by current feedback from Rf. Gm=0.58 / V (typical) when Rf=0.5W	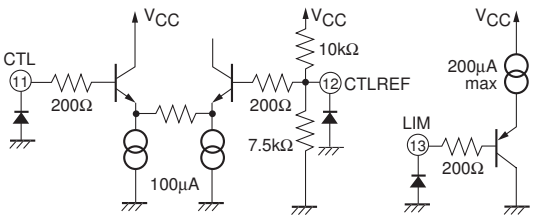
12	CTLREF	Control reference voltage. While this pin is set to about 0.43×V_{CC} internally, this voltage can be modified by applying a voltage from a low-impedance circuit. (The input impedance is about 4.3kΩ).	
13	LIM	Current limiter function control. The output current can be varied linearly by applying a voltage to this pin. The slope is 0.5A / V (typical) when Rf=0.5Ω.	
15 16	U_{IN}^+ U_{IN}^-	U phase Hall element inputs. Logic high is defined as states where $IN^+>IN^-$.	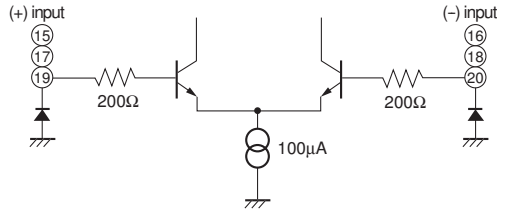
17 18	V_{IN}^+ V_{IN}^-	V phase Hall element inputs. Logic high is defined as states where $IN^+>IN^-$.	
19 20	W_{IN}^+ W_{IN}^-	W phase Hall element inputs. Logic high is defined as states where $IN^+>IN^-$.	
21	V_{CC}	Power supply for all internal blocks other than the output block. This voltage must be stabilized so that noise and ripple do not enter the IC.	

Truth Table and Control Functions

	Source → Sink	Hall input			FR
		U	V	W	
1	Phase V → Phase W	H	H	L	H
	Phase W → Phase V				L
2	Phase U → Phase W	H	L	L	H
	Phase W → Phase U				L
3	Phase U → Phase V	H	L	H	H
	Phase V → Phase U				L
4	Phase W → Phase V	L	L	H	H
	Phase V → Phase W				L
5	Phase W → Phase U	L	H	H	H
	Phase U → Phase W				L
6	Phase V → Phase U	L	H	L	H
	Phase U → Phase V				L

Note: In the FR column, “H” refers to a voltage of 2.75V or higher, and “L” refers to 2.25V or lower (when VCC=5V.)

Note: In the Hall input column, “H” refers to the state in the corresponding phase where the +input is at a potential at least 0.01V higher than the -input, and “L” refers to the state where the -input is at a potential at least 0.01V higher than the +input.

Note: Since the drive technique adopted is a 180° technique, phases other than the sink and source phase do not turn off.

Control Function and Current Limiter Function

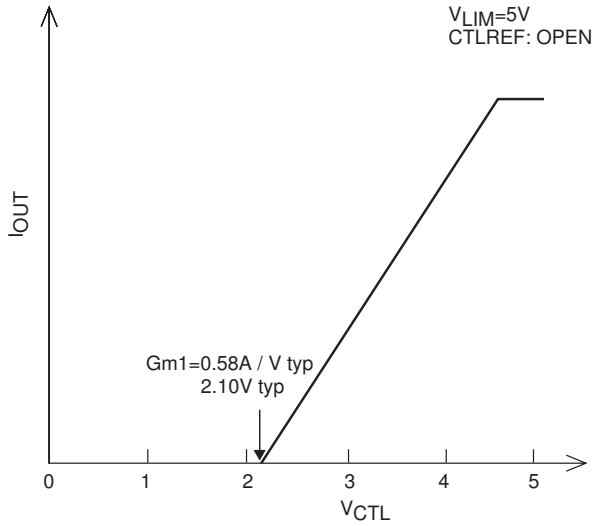

Control Characteristics

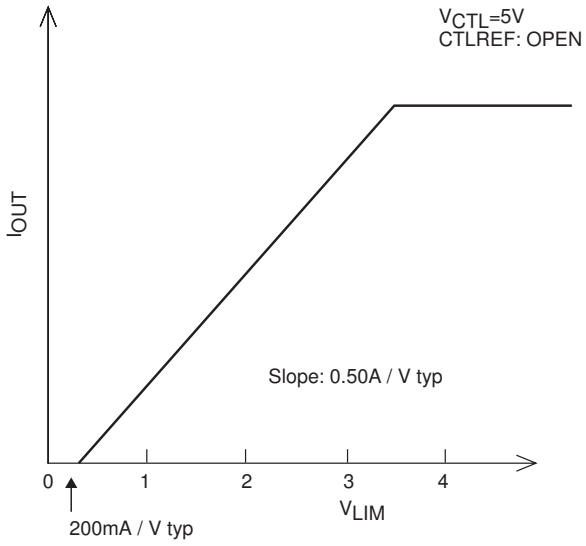

Control Limiter Characteristics

Application Circuit Example

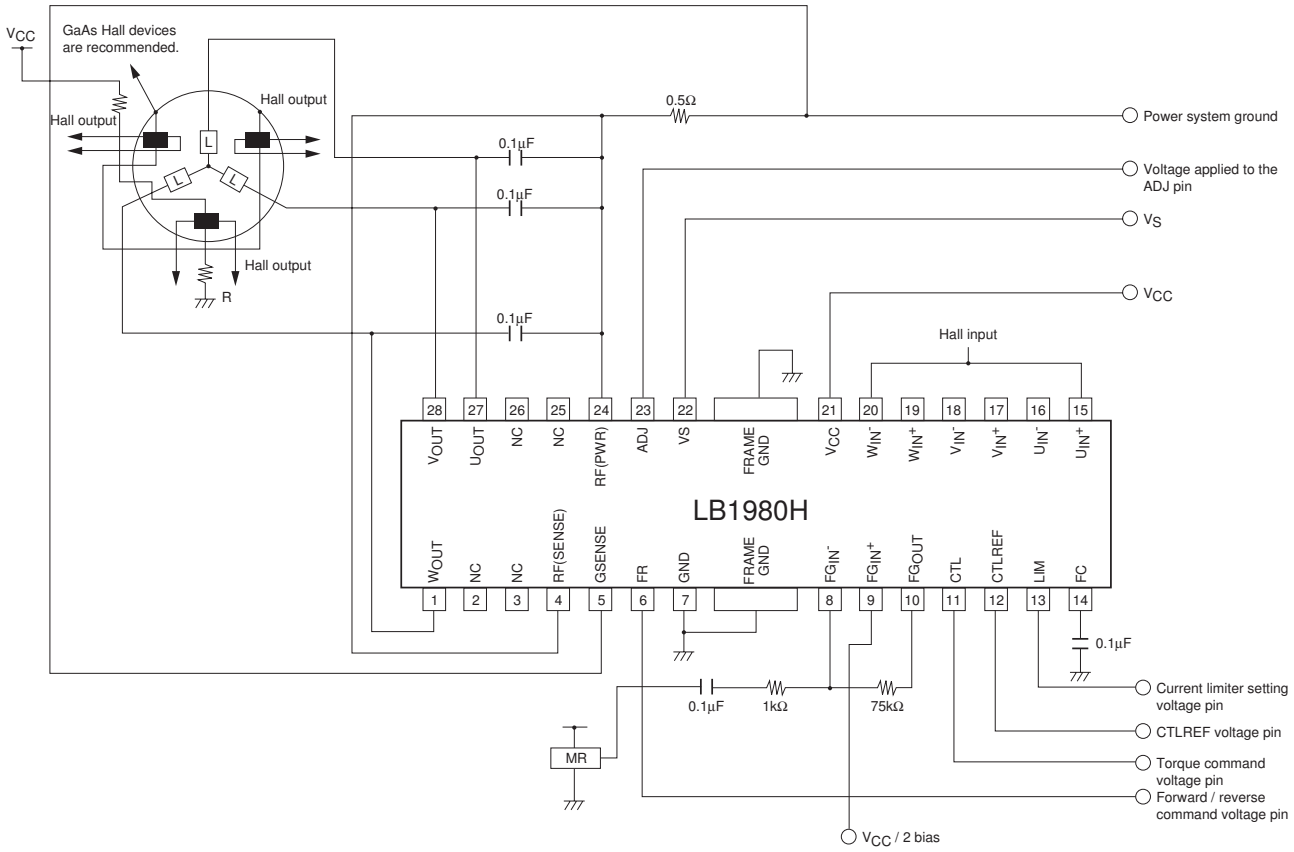

ON Semiconductor and the ON logo are registered trademarks of Semiconductor Components Industries, LLC (SCILLC). SCILLC owns the rights to a number of patents, trademarks, copyrights, trade secrets, and other intellectual property. A listing of SCILLC's product/patent coverage may be accessed at www.onsemi.com/site/pdf/Patent-Marking.pdf. SCILLC reserves the right to make changes without further notice to any products herein. SCILLC makes no warranty, representation or guarantee regarding the suitability of its products for any particular purpose, nor does SCILLC assume any liability arising out of the application or use of any product or circuit, and specifically disclaims any and all liability, including without limitation special, consequential or incidental damages. "Typical" parameters which may be provided in SCILLC data sheets and/or specifications can and do vary in different applications and actual performance may vary over time. All operating parameters, including "Typicals" must be validated for each customer application by customer's technical experts. SCILLC does not convey any license under its patent rights nor the rights of others. SCILLC products are not designed, intended, or authorized for use as components in systems intended for surgical implant into the body, or other applications intended to support or sustain life, or for any other application in which the failure of the SCILLC product could create a situation where personal injury or death may occur. Should Buyer purchase or use SCILLC products for any such unintended or unauthorized application, Buyer shall indemnify and hold SCILLC and its officers, employees, subsidiaries, affiliates, and distributors harmless against all claims, costs, damages, and expenses, and reasonable attorney fees arising out of, directly or indirectly, any claim of personal injury or death associated with such unintended or unauthorized use, even if such claim alleges that SCILLC was negligent regarding the design or manufacture of the part. SCILLC is an Equal Opportunity/Affirmative Action Employer. This literature is subject to all applicable copyright laws and is not for resale in any manner.