MATERIAL NUMBER	OLD PART NUMBER
1201140053	BTY497P-FBP

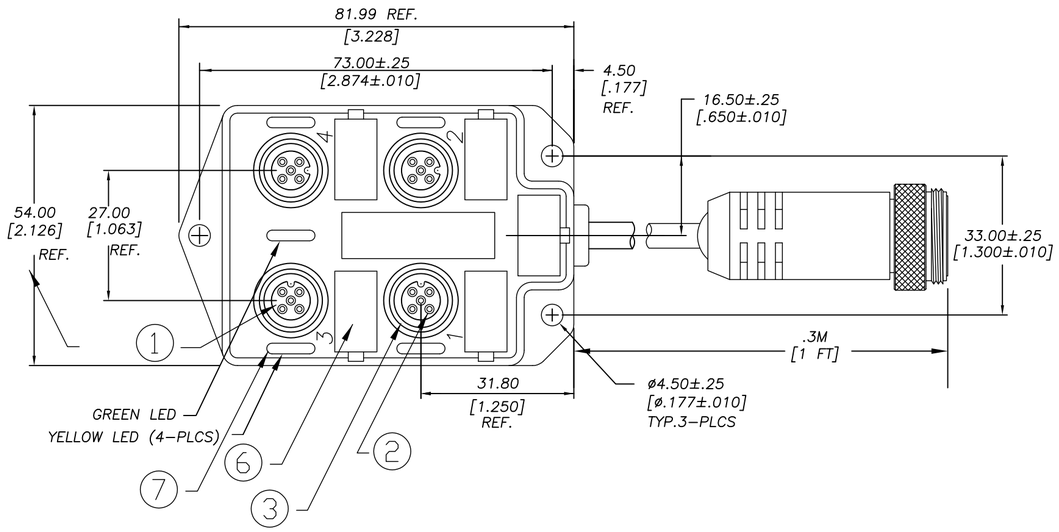

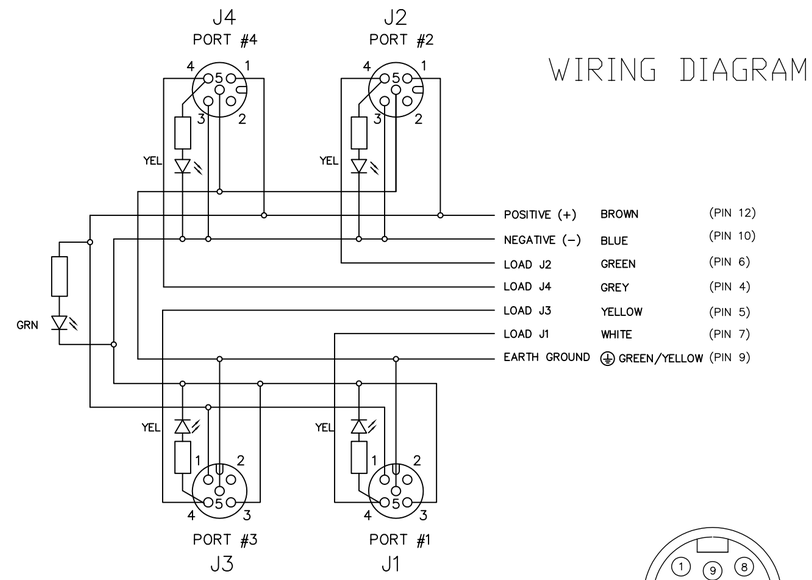

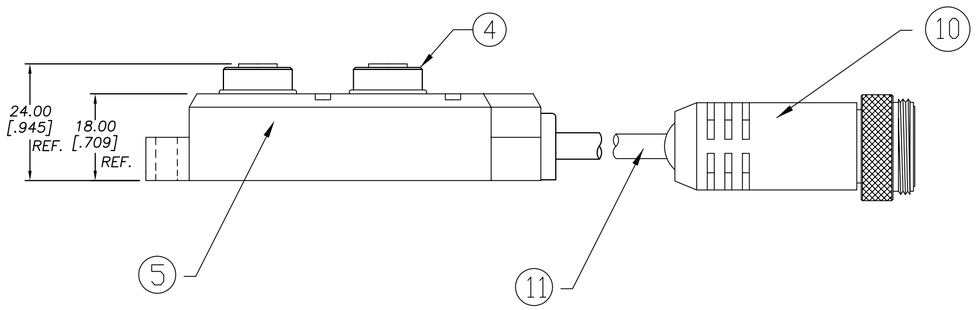

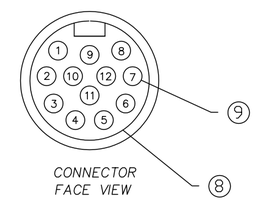

NUMBERS IN BRACKETS
ARE FOR NUMBERED CORED CABLE

ITEM		MATERIAL	FINISH
1	INSERT	NYLON	BLACK
2	CONTACT SOCKET	COPPER ALLOY	GOLD OVER NICKEL
3	O-RING	VITON	RED
4	RECEPTACLE SHELL	BRASS	NICKEL PLATED
5	HOUSING	PBT	YELLOW
6	LABEL	ABS	WHITE
7	LENS	NYLON	CLEAR
8	INSERT	PVC	YELLOW
9	CONTACT PIN	COPPER ALLOY	GOLD OVER NICKEL
10	RECEPTACLE SHELL	BRASS	NICKEL PLATED
11	CABLE 18AWG, 3 CONDUCTOR + 22AWG 8 CONDUCTOR, 300V, HIGH FLEX	- - -	- - -

VOLTAGE RATING	10-30 VDC
AMPERAGE RATING PER PORT	4 AMPS
PROTECTION	IP67
OPERATING TEMPERATURE	-20°C TO 90°C
UL CERTIFICATIONS	UL RECOGNIZED, FILE NO. E46237
CSA CERTIFICATIONS	CSA CERTIFIED, FILE NO. LR6837

REV	DESCRIPTION
1	ADD 2 P/N'S TO TABLE EC NO: WEU2010-0441 DRWN: BBRAUCH 2010/03/17 CH'KD: FP --- APPR: FPACHER 2010/03/19

QUALITY SYMBOL: ▼=0, (C)=0

GENERAL TOLERANCES (UNLESS SPECIFIED)

	mm	INCH
4 PLACES	±---	±---
3 PLACES	±---	±---
2 PLACES	±---	±.01
1 PLACE	±0.3	±---
ANGULAR ±---°		

DRAFT WHERE APPLICABLE MUST REMAIN WITHIN DIMENSIONS

DIMENSION STYLE: IN/MM
SCALE: 2:1
DESIGN UNITS: METRIC
THIRD ANGLE PROJECTION

DRAWN BY: BBRAUCH DATE: 2010/03/17
CHECKED BY: FP DATE: 2010/03/17
APPROVED BY: FPACHER DATE: 2010/03/18

TITLE: MICRO-CHANGE MPIS 4 PORT TOP MOUNT PNP #18/3 + #22/8 CABLE

molex MOLEX INCORPORATED

MATERIAL NO.: SEE CHART
DOCUMENT NO.: SD-120114-064
SHEET NO.: 1 OF 1
SIZE: C

THIS DRAWING CONTAINS INFORMATION THAT IS PROPRIETARY TO MOLEX INCORPORATED AND SHOULD NOT BE USED WITHOUT WRITTEN PERMISSION