PART NUMBER DATA							
CIRCUITS	PART NUMBER	ENGINEERING NUMBER	COLOR	A IN	mm	B IN	mm
2	391002302	M800-03-02-5	WHITE	.79	20.0	.472	12.00
3	391002303	M800-03-03-5	WHITE	1.26	32.0	.945	24.00
4	391002304	M800-03-04-5	WHITE	1.73	44.0	1.417	36.00
5	391002305	M800-03-05-5	WHITE	2.20	56.0	1.890	48.00
6	391002306	M800-03-06-5	WHITE	2.68	68.0	2.362	60.00
7	391002307	M800-03-07-5	WHITE	3.15	80.0	2.835	72.00
8	391002308	M800-03-08-5	WHITE	3.62	92.0	3.307	84.00
9	391002309	M800-03-09-5	WHITE	4.09	104.0	3.780	96.00
10	391002310	M800-03-10-5	WHITE	4.57	116.0	4.252	108.00
11	391002311	M800-03-11-5	WHITE	5.04	128.0	4.724	120.00
12	391002312	M800-03-12-5	WHITE	5.51	140.0	5.197	132.00

REF. LAST 2 DIGITS OF PART NUMBER EQUAL CIRCUIT COUNT

NOTE: IF THIS PRODUCT IS STORED IN AN ENVIRONMENT WITH A RELATIVE HUMIDITY OF LESS THAN 50%, MOISTURE MUST BE ADDED. REFER TO TECHNICAL ADVISORY AS 45499-001 FOR INSTRUCTIONS. (C)

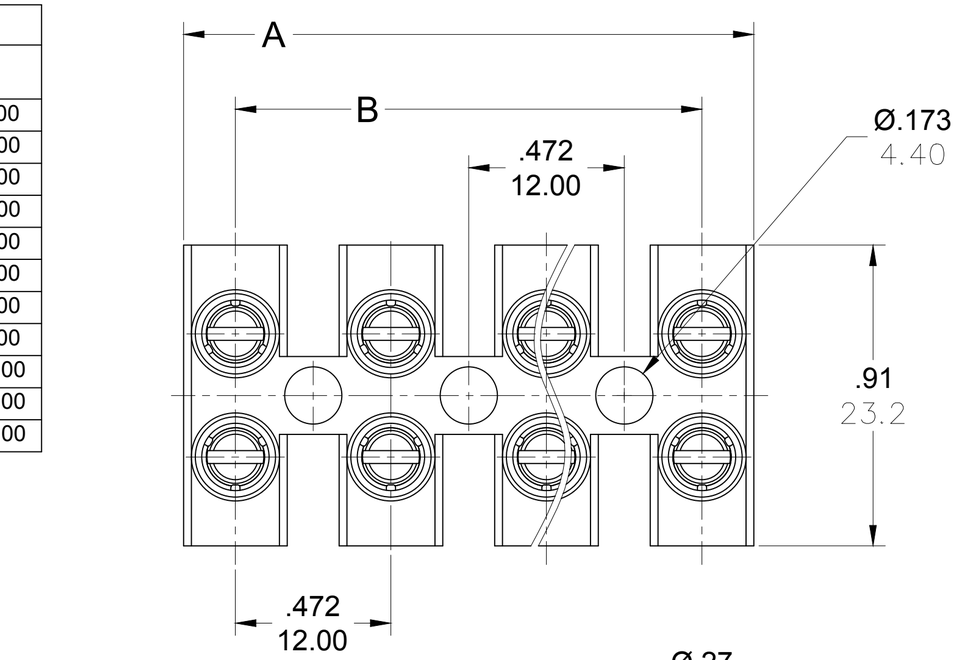

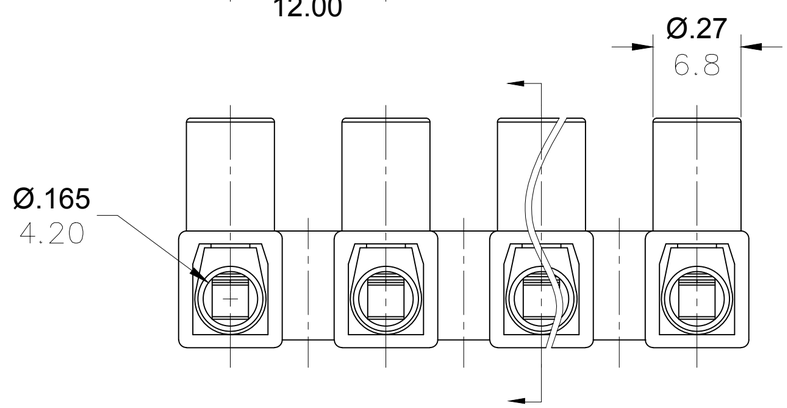

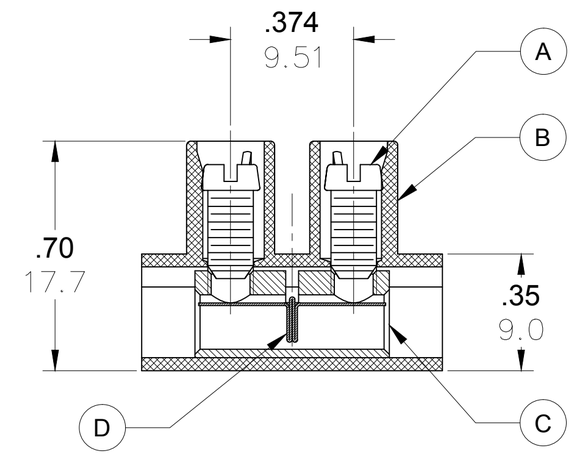

ENGINEERING NUMBER LEGEND

M800-03-XX-5

SERIES

PITCH=12.0MM

POLES

COLOR

CONTACT FACTORY FOR OPTIONAL COLORS

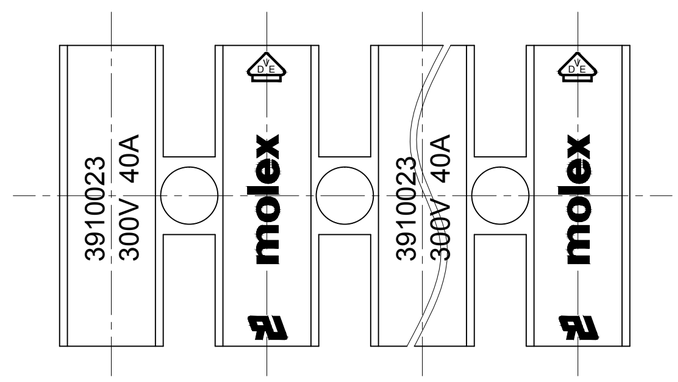

SPECIFICATIONS:

1. Material:
   (A) Screw: Steel, Zinc plated
   (B) Body: PA66 UL94 V-0
   (C) Cage: Brass, Nickel plated
   (D) Terminal: Stainless Steel
2. Rating: 300V, 40amps
3. Wire range: 20-8 AWG
4. Max torque: 7.0 in lbs.
5. Dielectric voltage withstand:DC 3000V for 1 minute.
6. Insulation resistance: DC 1000V,100GΩ
7. Rated Impulse Voltage: 4000V, Plus and Minus 5 times each
8. Strip Length: .24 in. (6.0mm)
9. Operating Temperature: -40° C to +105° C
10. Contact Resistance: < 3 mΩ
11. All dims. shown are for reference only

E	DRWN:		
	CH'KD:		
C	APPR:		
REV	DESCRIPTION		

QUALITY SYMBOL: ▼ = ; (C) =

GENERAL TOLERANCES (UNLESS SPECIFIED)	mm	INCH
4 PLACES	±---	±---
3 PLACES	±---	±.005
2 PLACES	±0.13	±.01
1 PLACE	±0.3	±---
ANGULAR ±---°		

DRAFT WHERE APPLICABLE MUST REMAIN WITHIN DIMENSIONS

DIMENSION STYLE: IN/MM

SCALE: ---

DESIGN UNITS: METRIC

THIRD ANGLE PROJECTION

DRAWN BY: RSTONE DATE: 2014/07/11

CHECKED BY: ---- DATE: ----

APPROVED BY: JFMURPHY DATE: 2014/07/21

TITLE: TERMINAL STRIP 12MM LOW PROFILE 300V ----

MOLEX INCORPORATED

MATERIAL NO.

DOCUMENT NO. SD-39100-016

SHEET NO.

SIZE C

THIS DRAWING CONTAINS INFORMATION THAT IS PROPRIETARY TO MOLEX INCORPORATED AND SHOULD NOT BE USED WITHOUT WRITTEN PERMISSION