## PART NUMBER DATA

| CIRCUITS | PART NUMBER | ENGINEERING NUMBER | COLOR | A IN | mm | B IN | mm |
|---|---|---|---|---|---|---|---|
| 2 | 391002202 | M800-03-02-5-M1 | WHITE | .79 | 20.0 | .472 | 12.00 |
| 3 | 391002203 | M800-03-03-5-M1 | WHITE | 1.26 | 32.0 | .945 | 24.00 |
| 4 | 391002204 | M800-03-04-5-M1 | WHITE | 1.73 | 44.0 | 1.417 | 36.00 |
| 5 | 391002205 | M800-03-05-5-M1 | WHITE | 2.20 | 56.0 | 1.890 | 48.00 |
| 6 | 391002206 | M800-03-06-5-M1 | WHITE | 2.68 | 68.0 | 2.362 | 60.00 |
| 7 | 391002207 | M800-03-07-5-M1 | WHITE | 3.15 | 80.0 | 2.835 | 72.00 |
| 8 | 391002208 | M800-03-08-5-M1 | WHITE | 3.62 | 92.0 | 3.307 | 84.00 |
| 9 | 391002209 | M800-03-09-5-M1 | WHITE | 4.09 | 104.0 | 3.780 | 96.00 |
| 10 | 391002210 | M800-03-10-5-M1 | WHITE | 4.57 | 116.0 | 4.252 | 108.00 |
| 11 | 391002211 | M800-03-11-5-M1 | WHITE | 5.04 | 128.0 | 4.724 | 120.00 |
| 12 | 391002212 | M800-03-12-5-M1 | WHITE | 5.51 | 140.0 | 5.197 | 132.00 |

REF. LAST 2 DIGITS OF PART NUMBER EQUAL CIRCUIT COUNT

NOTE: IF THIS PRODUCT IS STORED IN AN ENVIRONMENT WITH A RELATIVE HUMIDITY OF LESS THAN 50%, MOISTURE MUST BE ADDED. REFER TO TECHNICAL ADVISORY AS 45499-001 FOR INSTRUCTIONS. (C)

ENGINEERING NUMBER LEGEND

M800-03-XX-5-M1

SERIES — PITCH=12.0MM — POLES — COLOR — HIGH PROFILE

CONTACT FACTORY FOR OPTIONAL COLORS

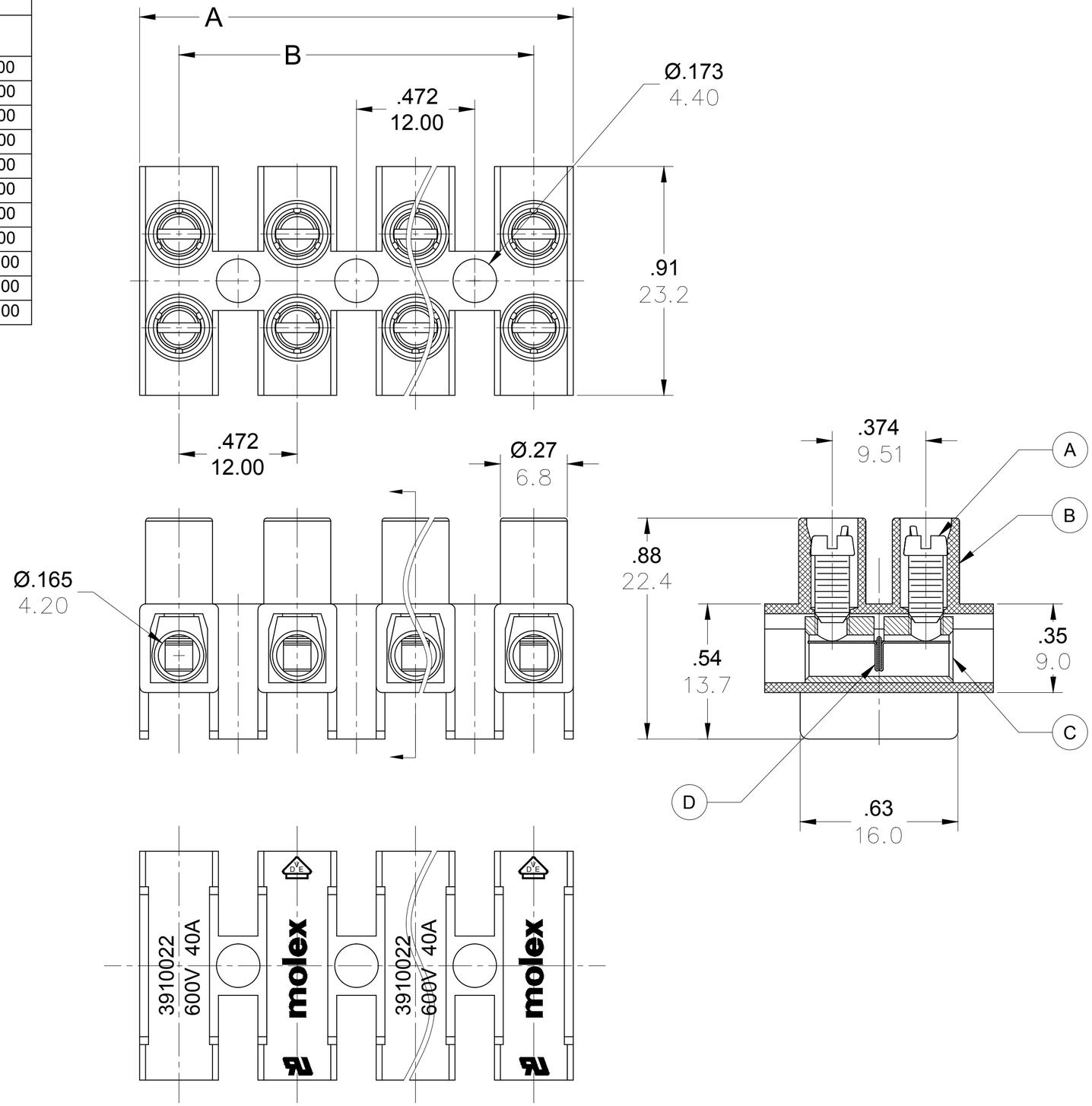


## SPECIFICATIONS:

1. Material:
   (A) Screw: Steel, Zinc plated
   (B) Body: PA66 UL94 V-0
   (C) Cage: Brass, Nickel plated
   (D) Terminal: Stainless Steel
2. Rating: 600V, 40amps
3. Wire range: 20-8 AWG
4. Max torque: 7.0 in lbs.
5. Dielectric voltage withstand: DC 3000V for 1 minute.
6. Insulation resistance: DC 1000V, 100GΩ
7. Rated Impulse Voltage: 4000V, Plus and Minus 5 times each
8. Strip Length: .24 in. (6.0mm)
9. Operating Temperature: -40° C to +105° C
10. Contact Resistance: < 3 mΩ
11. All dims. shown are for reference only

| REV | DESCRIPTION |
|---|---|
| C | ADDED MOISTURE NOTE<br>EC NO: IPG2016-1226 3/8/16<br>DRWN: RSTONE 2016/03/10<br>CH'KD: MZIELINS 2014/07/21<br>APPR: KJOZWIK |

QUALITY SYMBOL: ▼=0, (C)=0

| GENERAL TOLERANCES (UNLESS SPECIFIED) | mm | INCH |
|---|---|---|
| 4 PLACES | ±--- | ±--- |
| 3 PLACES | ±--- | ±.005 |
| 2 PLACES | ±0.13 | ±.01 |
| 1 PLACE | ±0.3 | ±--- |
| ANGULAR ±---° | | |

DRAFT WHERE APPLICABLE MUST REMAIN WITHIN DIMENSIONS

DIMENSION STYLE: IN/MM
SCALE: ---
DESIGN UNITS: METRIC
THIRD ANGLE PROJECTION

DRAWN BY: RSTONE DATE: 2014/07/11
CHECKED BY: G FARNSW DATE: ----
APPROVED BY: JFMURPHY DATE: 2014/07/21

TITLE: TERMINAL STRIP 12MM HIGH PROFILE 600V
---

MOLEX INCORPORATED

MATERIAL NO.: SEE CHART
DOCUMENT NO.: SD-39100-015
SHEET NO.: 1 0F 1
SIZE: C

THIS DRAWING CONTAINS INFORMATION THAT IS PROPRIETARY TO MOLEX INCORPORATED AND SHOULD NOT BE USED WITHOUT WRITTEN PERMISSION