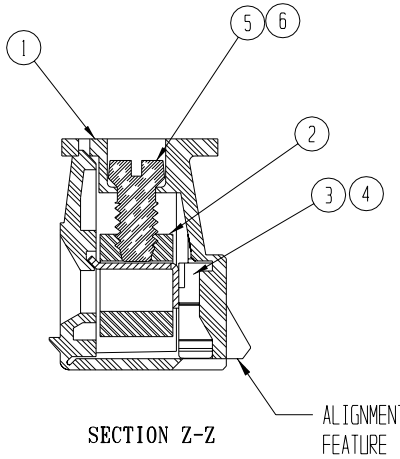

SECTION Z-Z

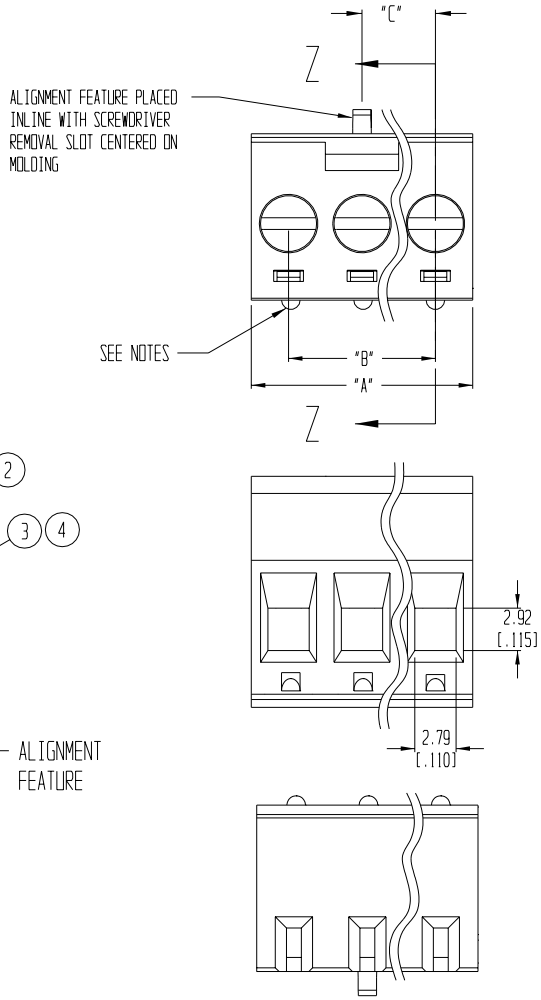

		DIM. "A"	DIM. "B" $^{+.0050}_{-.0080}$	DIM. "C"
	399910302	[.42]	[.197]	[.197]
399900303	399910303	[.62]	[.394]	[.394]
399900304	399910304	[.82]	[.591]	[.394]
399900305	399910305	[1.02]	[.788]	[.394]
399900306	399910306	[1.21]	[.985]	[.591]
399900307	399910307	[1.41]	[1.182]	[.591]
399900308	399910308	[1.61]	[1.379]	[.788]
399900309	399910309	[1.80]	[1.576]	[.788]
399900310	399910310	[2.00]	[1.773]	[.985]
399900311	399910311	[2.20]	[1.970]	[.985]
399900312	399910312	[2.39]	[2.167]	[1.182]
399900313	399910313	[2.59]	[2.364]	[1.182]
399900314	399910314	[2.79]	[2.561]	[1.379]
399900315	399910315	[2.99]	[2.758]	[1.379]
399900316	399910316	[3.18]	[2.955]	[1.576]
399900317	399910317	[3.38]	[3.152]	[1.576]
399900318	399910318	[3.58]	[3.349]	[1.773]

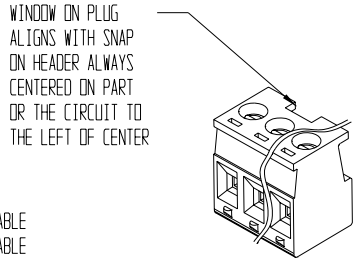

AUXILLARY VIEW
SCALE 1:1

NOTES:

1. MATERIAL: SEE TABLE
2. FINISHES: SEE TABLE
3. PRODUCT SPECIFICATION: NOT REQUIRED
4. PACKAGING: NOT REQUIRED
5. MATES WITH: 99 SERIES HEADER
6. INCH DIMS ARE SHOWN IN BRACKETS [XXX]
7. "XX" REFERS TO THE QTY. OF CIRCUITS
8. SNAP FEATURES
   2 CIRCUIT: 2 SNAPS
   3-24 CIRCUIT: 3 SNAPS
   LOCATED ON ENDS AND ALIGNED WITH SCREWDRIVER REMOVAL SLOT

ITEM	QTY.	DESCRIPTION	MATERIAL	FINISH
5	XX	SCREW, M3 X 0.5 X 5.08 (STANDARD)	STEEL	ZINC CHROMATE
4	XX	TERMINAL (-G30 OPTION)	PHOSPHOR BRONZE	GOLD PLATE
3	XX	TERMINAL (STANDARD)	PHOSPHOR BRONZE	TIN PLATE
2	XX	PRESSURE CLAMP	BRASS	NICKEL PLATE
1	1	MOLDING	POLYAMIDE	BLACK

EC NO. RELEASED
DRWN: CLY
CH'K:
APPR:
DESCRIPTION
A
REV

QUALITY SYMBOLS
MAJOR =
CRITICAL (C) =
SPC (S) =

GENERAL TOLERANCES: (UNLESS SPECIFIED)

	mm	INCH
4 PLACES		±.0015
3 PLACES	±.038	±.005
2 PLACES	±.13	±.01
1 PLACE	±.3	
ANGULAR:	±2°	

DRAFT WHERE APPLICABLE MUST REMAIN WITHIN DIMENSIONS

SCALE 3:1
DESIGN UNITS ☐ mm ☒ INCH
THIRD ANGLE PROJECTION

DRAWN BY & DATE C. YORK 08-12-03
CHECKED BY & DATE
APPROVED BY & DATE
CAD FILENAME 9909XX01

TITLE: SINGLE ROW EUROSTYLE PLUG ASSEMBLY 5.00mm [.197]

MOLEX INCORPORATED

MATERIAL NO. SEE CHART
DRAWING NO. SD-39990-001
SHEET NO. 1 OF 1

THIS DRAWING CONTAINS INFORMATION THAT IS PROPRIETARY TO MOLEX INCORPORATED AND SHOULD NOT BE USED WITHOUT WRITTEN PERMISSION.

SIZE B

PROJECT NO. - | SHT - | REV -
DIMENSIONS: ☒ mm/INCH ☐ INCH/mm ☐ mm ONLY
REVISE ON CAD ONLY