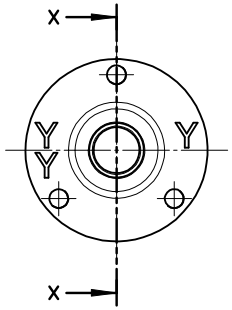

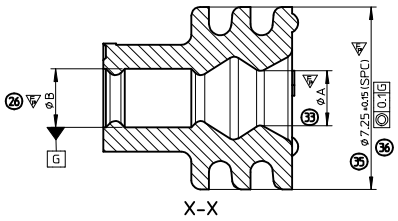

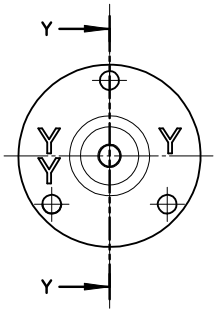

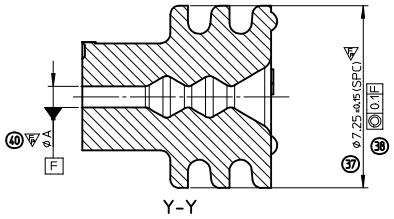

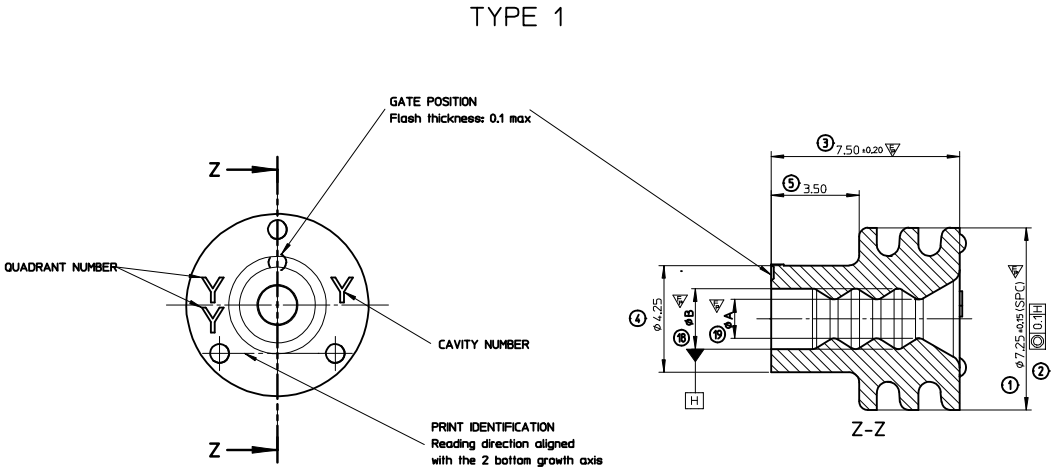

BULK PACKAGING

50 000 seals (5 bags of 10 000 seals)/cardboard
PACKAGING CODE: GALIA A12

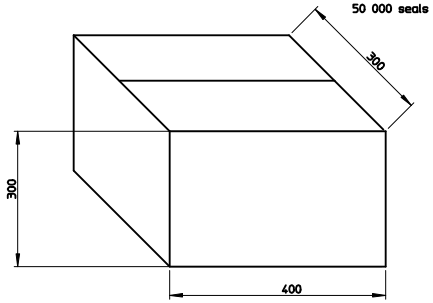

MOLEX PART NUMBER	COLOR	TYPE	ALLOWED WIRE DIAMETER	WEIGHT (g)	ØA	ØB
0643251366	BLUE	2	3,40/4,20	0,137	2,55/2,70	2,80/2,95
0643251358	GREY	2	2,65/3,50	0,158	2,00/2,15	2,20/2,35
0643251345	GREEN	1	2,00/2,80	0,168	1,40/1,70	2,25/2,55
0643251332	RED	3	1,30/2,15	0,190	0,70/1,00	-

(SPC): DENOTE SPC DIMENSION (3)

QUALITY SYMBOL COUNT	
PERFORMANCE	= 10
ASSEMBLY	= 0
CUSTOMER	= 0

MATERIAL SPECIFICATION : Silicon elastomer type LSR self bleeding (2% approx)

Flash max 0.1. No cut, no short shots, no tear, no distortion on seal lips allowed.

REV	DESCRIPTION	
D	UPDATE TYPE 2	
	EC NO: G2013-0087	
	DRWN:OVERCHERE	2012/09/27
	CHKD:JDUCLOS	2012/09/28
	APPR:OPLESSIS	2012/10/26

GENERAL TOLERANCES (UNLESS SPECIFIED)

	mm	INCH
4 PLACES	± ---	± ---
3 PLACES	± ---	± ---
2 PLACES	± 0,1	± ---
1 PLACE	± 0,1	± ---
0 PLACE	± 0,1	± ---
ANGULAR ±1/2°		

DRAFT WHERE APPLICABLE MUST REMAIN WITHIN DIMENSIONS

DIMENSION STYLE: MM ONLY	SCALE: 10:1	DESIGN UNITS: METRIC	FIRST ANGLE PROJECTION
DRAWN BY: JDUCLOS	DATE: 2010/04/07	TITLE: SGL WIRE SEALS 2.8 W/O RIB	
CHECKED BY: CBOUCHAN	DATE: 2010/04/07		
APPROVED BY: BMOSER	DATE: 2010/05/04	molex	
MATERIAL NO.: SEE CHART		DOCUMENT NO.: SD-64325-006	SHEET NO.: 1 OF 1
SIZE: A1	THIS DRAWING CONTAINS INFORMATION THAT IS PROPRIETARY TO MOLEX INCORPORATED AND SHOULD NOT BE USED WITHOUT WRITTEN PERMISSION		