LOOSE PIECE		TAPE MOUNTED		SPECIFICATIONS								
MATERIAL NUMBER	ALTERNATE NUMBER	MATERIAL NUMBER	ALTERNATE NUMBER	HOUSING COLOR	STUD SIZE	"S" ±.005/(0.13)	"W" MAX.	"C" MIN.	"L" MAX.	"ID" MIN.	STOCK THICKNESS REFERENCE	"H" ±.020/.051
190700005	AA-220-02X	190700006	AA-220-02XT	RED	2	.094/(2.39)	.235/(6.00)	.157/(3.99)	.709/(18.01)	.062/(1.57)	.028/(0.71)	.980/(24.89)
190700007	AA-220-04X	190700008	AA-220-04XT	RED	4	.119/(3.02)						
190700009	AA-220-06X	190700010	AA-220-06XT	RED	6	.146/(3.71)						
190700011	AA-221-06X	190700012	AA-221-06XT	RED	6	.146/(3.71)	.322/(8.18)	.270/(6.86)	.866/(22.00)	.062/(1.57)	.028/(0.71)	
190700013	AA-221-08X	190700014	AA-221-08XT	RED	8	.173/(4.39)						
190700015	AA-221-10X	190700017	AA-221-10XT	RED	10	.198/(5.03)						
190700019	AA-221-209X	190700020	AA-221-209XT	RED	M5	.209/(5.18)						
190700021	AA-222-10X	190700022	AA-222-10T	RED	10	.198/(5.03)	.477/(12.11)	.386/(9.80)	1.060/(26.92)	.062/(1.57)	.028/(0.71)	
190700023	AA-222-14X	190700024	AA-222-14XT	RED	14	.265/(6.73)						
190700608	**AA-222-14X-BK**	190700601	AA-222-14XT-BK	BLACK	14	.265/(6.73)						
190700026	AA-222-56X	190700027	AA-222-56XT	RED	5/16"	.328/(8.33)						
190700609	**AA-222-56X-BK**	**190700611**	**AA-222-56XT-BK**	BLACK	5/16"	.328/(8.33)						
190700029	AA-226-10X	190700030	AA-226-10XT	RED	10	.198/(5.03)	.544/(13.82)	.552/(14.02)	1.259/(31.98)	.055/(1.40)	.031/(0.79)	1.172/(29.77)
190700031	AA-226-14X	190700032	AA-226-14XT	RED	14	.265/(6.73)						
190700036	AA-226-56X	190700037	AA-226-56XT	RED	5/16"	.328/(8.33)						
190700033	AA-226-38X	190700035	AA-226-38XT	RED	3/8"	.390/(9.91)						
190700038	AA-232-04X	190700039	AA-232-04XT	RED	4	.119/(3.02)	.264/(6.70)	.240/(6.10)	.807/(20.50)	.062/(1.57)	.028/(0.71)	.980/(24.89)
190700040	AA-232-06X	190700042	AA-232-06XT	RED	6	.146/(3.71)						
190700044	AA-232-08X	190700045	AA-232-08XT	RED	8	.173/(4.39)						
190700051	AA-233-10X	190700052	AA-233-10XT	RED	10	.198/(5.03)	.283/(7.20)	.240/(6.10)	.816/(20.73)	.062/(1.57)	.028/(0.71)	
190700612	**AA-233-10X-BK**	**190700614**	**AA-233-10XT-BK**	BLACK	10	.198/(5.03)						

C3

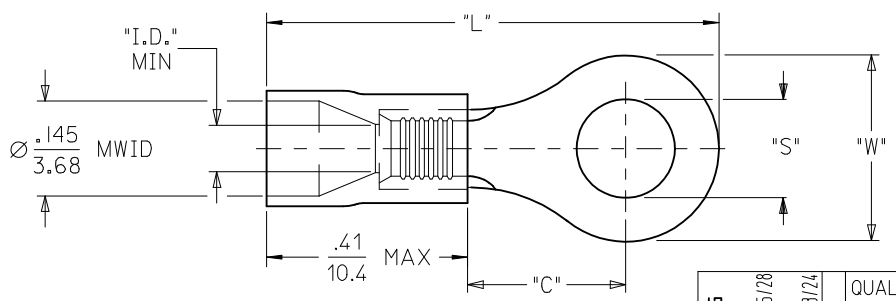

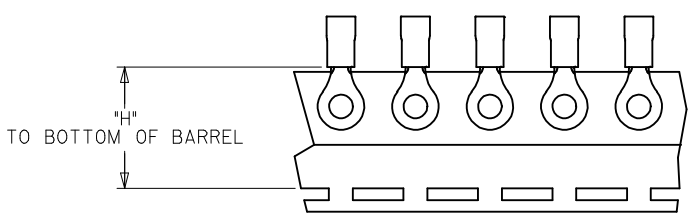

NOTE(S):
1. MATERIAL: COPPER
   PLATING: ELECTROPLATE TIN
2. DELETED
3. INSULATION: MOLDED PVC, SEE CHART FOR COLOR
4. MWID=MAXIMUM WIRE INSULATION DIA.
5. ALL DIMENSIONS IN INCHES (MM).
6. PARTS ARE ROHS COMPLIANT.

SALES DRAWING

REV	DESCRIPTION
C3	ADD NEW PART #'S BK HSG EC NO: IPG2015-2037 2015/05/28 DRWN:GROJAS01 CH'KD: APPR: JMACNEIL 2016/03/24

QUALITY SYMBOLS: ▼=0, (C)=0

GENERAL TOLERANCES (UNLESS SPECIFIED)

	mm	INCH
4 PLACES	± ---	± ---
3 PLACES	± ---	± ---
2 PLACES	± ---	± ---
1 PLACE	± ---	± ---
ANGULAR ±---°		

DRAFT WHERE APPLICABLE MUST REMAIN WITHIN DIMENSIONS

DIMENSION STYLE: IN/MM
SCALE: ---
DESIGN UNITS: INCH
THIRD ANGLE PROJECTION

DRAWN BY	DMYRICK	DATE 2005/7/22
CHECKED BY	HBEITZEL	DATE 2005/7/22
APPROVED BY	RDEROSS	DATE 2005/7/22

TITLE: RING TONGUE TERMINAL INSULKRIMP, 200-SERIES 22-18 AWG

MOLEX INCORPORATED

MATERIAL NO.: SEE CHART
DOCUMENT NO.: SD-19070-003
SHEET NO.: 1 OF 1
SIZE: B

THIS DRAWING CONTAINS INFORMATION THAT IS PROPRIETARY TO MOLEX INCORPORATED AND SHOULD NOT BE USED WITHOUT WRITTEN PERMISSION