| LOOSE PIECE BOX | | TAPE MOUNTED PARTS | | STUD | ØS | W | L | C | T | H |
|---|---|---|---|---|---|---|---|---|---|---|
| MATERIAL NO. | ENG. P/N | MATERIAL NO. | ENG. P/N | SIZE | | ±.012/0.30 | MAX | MIN | REF | ±.02/0.5 |
| 190710132 | D-650-06X | 190710133 | D-650-06XT | 6 | .146/ 3.71 | .468/11.89 | 1.31/33.3 | .363/9.22 | .045/1.14 | 1.070/27.18 |
| 190710134 | D-650-08X | 190710135 | D-650-08XT | 8 | .173/ 4.39 | .468/11.89 | 1.31/33.3 | .363/9.22 | .045/1.14 | 1.070/27.18 |
| 190710136 | D-650-10X | 190710139 | D-650-10XT | 10 | .198/ 5.03 | .468/11.89 | 1.31/33.3 | .363/9.22 | .045/1.14 | 1.070/27.18 |
| 190710140 | D-650-14X | 190710143 | D-650-14XT | 1/4 | .265/ 6.73 | .468/11.89 | 1.31/33.3 | .363/9.22 | .045/1.14 | 1.070/27.18 |
| 190710144 | D-650-56X | 190710145 | D-650-56XT | 5/16 | .328/ 8.33 | .468/11.89 | 1.31/33.3 | .363/9.22 | .045/1.14 | 1.070/27.18 |
| 190710146 | D-651-10X | - | - | 10 | .198/ 5.03 | .583/14.81 | 1.43/36.3 | .428/10.87 | .045/1.14 | - |
| 190710148 | D-651-14X | 190710149 | D-651-14XT | 1/4 | .265/ 6.73 | .583/14.81 | 1.43/36.3 | .428/10.87 | .045/1.14 | 1.070/27.18 |
| 190710153 | D-651-56X | 190710155 | D-651-56XT | 5/16 | .328/ 8.33 | .583/14.81 | 1.43/36.3 | .428/10.87 | .045/1.14 | 1.070/27.18 |
| 190710150 | D-651-38X | 190710152 | D-651-38XT | 3/8 | .390/ 9.91 | .583/14.81 | 1.43/36.3 | .428/10.87 | .045/1.14 | 1.070/27.18 |
| 190710156 | D-651-76X | - | - | 7/16 | .453/ 11.51 | .583/14.81 | 1.43/36.3 | .428/10.87 | .045/1.14 | - |
| 190710158 | D-652-10X | - | - | 10 | .198/ 5.03 | .810/20.57 | 1.73/43.9 | .611/15.52 | .050/1.27 | - |
| 190710161 | D-652-14X | - | - | 1/4 | .265/ 6.73 | .810/20.57 | 1.73/43.9 | .611/15.52 | .050/1.27 | - |
| 190710163 | D-652-56X | - | - | 5/16 | .328/ 8.33 | .810/20.57 | 1.73/43.9 | .611/15.52 | .050/1.27 | - |
| 190710162 | D-652-38X | - | - | 3/8 | .390/ 9.91 | .810/20.57 | 1.73/43.9 | .611/15.52 | .050/1.27 | - |
| 190710166 | D-652-76X | - | - | 7/16 | .453/ 11.51 | .810/20.57 | 1.73/43.9 | .611/15.52 | .050/1.27 | - |
| 190710334 | D-652-12X | 190710160 | D-652-12XT | 1/2 | .515/ 13.08 | .810/20.57 | 1.73/43.9 | .611/15.52 | .050/1.27 | 1.400/35.56 |
| 190710164 | D-652-58X | - | - | 5/8 | .656/ 16.66 | .810/20.57 | 1.73/43.9 | .611/15.52 | .050/1.27 | - |
| 190710172 | D-653-56X | - | - | 5/16 | .328/ 8.33 | 1.125/28.58 | 2.28/57.9 | .986/25.04 | .050/1.27 | - |
| 190710171 | D-653-38X | - | - | 3/8 | .390/ 9.91 | 1.125/28.58 | 2.28/57.9 | .986/25.04 | .050/1.27 | - |
| 190710174 | D-653-76X | - | - | 7/16 | .453/ 11.51 | 1.125/28.58 | 2.28/57.9 | .986/25.04 | .050/1.27 | - |
| 190710168 | D-653-12X | - | - | 1/2 | .515/ 13.08 | 1.125/28.58 | 2.28/57.9 | .986/25.04 | .050/1.27 | - |
| 190710173 | D-653-58X | - | - | 5/8 | .656/ 16.66 | 1.125/28.58 | 2.28/57.9 | .986/25.04 | .050/1.27 | - |
| 190710170 | D-653-34X | - | - | 3/4 | .781/ 19.84 | 1.125/28.58 | 2.28/57.9 | .986/25.04 | .050/1.27 | - |
| 190710176 | D-656-06X | 190710177 | D-656-06XT | 6 | .146/ 3.71 | .374/9.50 | 1.27/32.3 | .363/9.22 | .045/1.14 | 1.070/27.18 |
| 190710178 | D-656-08X | 190710179 | D-656-08XT | 8 | .173/ 4.39 | .374/9.50 | 1.27/32.3 | .363/9.22 | .045/1.14 | 1.070/27.18 |
| 190710180 | D-656-10X | 190710181 | D-656-10XT | 10 | .198/ 5.03 | .374/9.50 | 1.27/32.3 | .363/9.22 | .045/1.14 | 1.070/27.18 |
| 190710182 | D-656-14X | 190710184 | D-656-14XT | 1/4 | .265/ 6.73 | .374/9.50 | 1.27/32.3 | .363/9.22 | .045/1.14 | 1.070/27.18 |

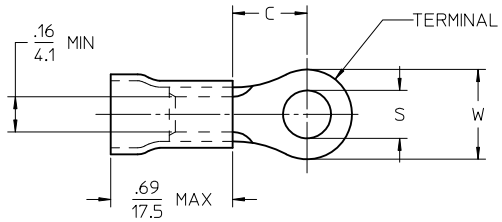


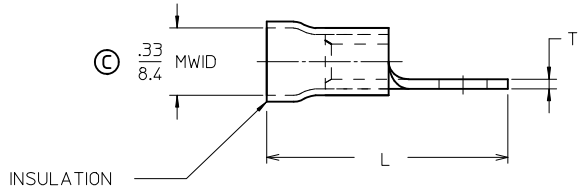


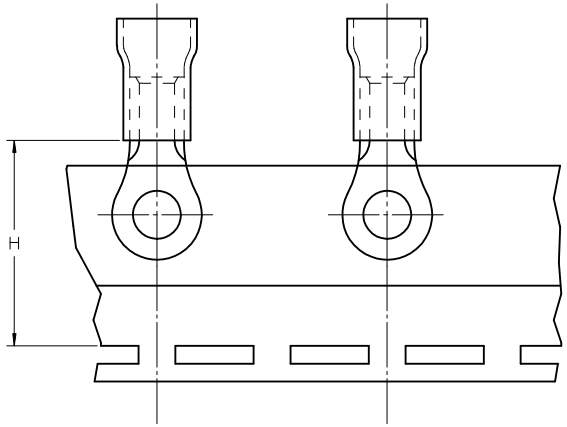


PARTS ON TAPE
(DOUBLE-SPACED)

SALES DRAWING

REDRAWN FROM MANUAL DRAWING
DRAWN BY JTK 1970/01/21

NOTES:

1. MATERIALS:
   TERMINAL: TIN-PLATED COPPER
   INSULATION: RED PVC
2. PARTS ARE ROHS COMPLIANT.
3. MWID = MAXIMUM WIRE INSULATION DIAMETER.

REDRAW, FLARE ID
EC NO: WNA2011-0440
DRWN:ETHRODAHL 2011/03/18
CH'KD:JMACNEIL 2011/03/18
APPR: JMACNEIL 2011/04/27
DESCRIPTION
REV

QUALITY SYMBOLS
▼=0
Ⓒ=0

| GENERAL TOLERANCES (UNLESS SPECIFIED) | mm | INCH |
|---|---|---|
| 4 PLACES | ± --- | ± --- |
| 3 PLACES | ± --- | ± .005 |
| 2 PLACES | ± 0.13 | ± .010 |
| 1 PLACE | ± 0.25 | ± .020 |
| ANGULAR ±1/2° | | |

DRAFT WHERE APPLICABLE MUST REMAIN WITHIN DIMENSIONS

DIMENSION STYLE: IN/MM
SCALE: 1:1
DESIGN UNITS: INCH
THIRD ANGLE PROJECTION

DRAWN BY: ETHRODAHL DATE: 2011/03/18
CHECKED BY: JMACNEIL DATE: 2011/03/18
APPROVED BY: JMACNEIL DATE: 2011/04/27

TITLE: RING TONGUE TERMINALS 8 AWG INSULKRIMP

molex MOLEX INCORPORATED

MATERIAL NO.: SEE CHART
DOCUMENT NO.: SD-19071-002
SHEET NO.: 1 OF 1
SIZE: C

THIS DRAWING CONTAINS INFORMATION THAT IS PROPRIETARY TO MOLEX INCORPORATED AND SHOULD NOT BE USED WITHOUT WRITTEN PERMISSION