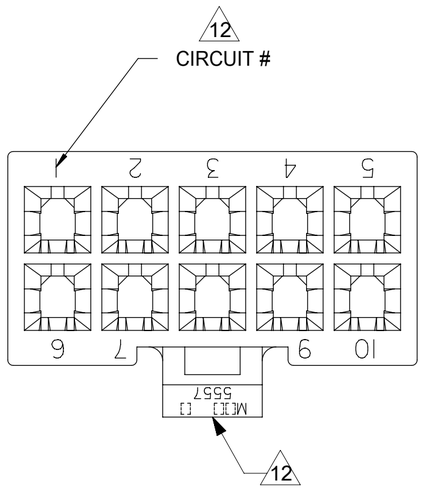

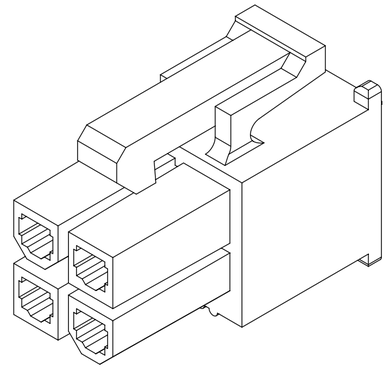

4 CKT SHOWN

NOTES:

1) MATERIAL:
"BLANK" = NYLON 6/6, UNFILLED UL94V-2, COLOR: NATURAL.
"BL" = NYLON 6/6, UNFILLED UL94V-2, COLOR: BLACK.
"BU" = NYLON 6/6, UNFILLED UL94V-2, COLOR: BLUE.
"RE"= NYLON 6/6, UNFILLED UL94V-2, COLOR: RED.
"YE"= NYLON 6/6, UNFILLED UL94V-2, COLOR: YELLOW
"GRE"= NYLON 6/6, UNFILLED UL94V-2, COLOR: GREEN.
"210" = NYLON 6/6, UNFILLED UL94V-0, COLOR: NATURAL.
"400" = NYLON 6/6, UNFILLED UL94V-0, COLOR: BLACK.
2) FINISH: NOT APPLICABLE
3) PRODUCT SPECIFICATION: PS-5556-001
4) PACKAGING: BULK
5) PART MATES WITH MOLEX PLUG #5559 AND HEADERS #5566, #5569.
6) PART TO BE USED WITH MOLEX FEMALE TERMINAL #5556.
7) PART IS NOT DESIGNED FOR CURRENT SHARING.
8) CONNECTORS ARE NOT TO BE MATED OR UNMATED WHILE CIRCUITS ARE LIVE.
9) WIRES ARE TO BE DRESSED IN SUCH A MANNER TO ALLOW THE TERMINALS TO FLOAT FREELY IN THE POCKET.
10) PART CONFORMS TO CLASS "B" REQUIREMENTS OF COSMETIC SPECIFICATION PS-45499-002 WITH THE EXCEPTION OF DISCOLORATION, FLASH AND SINK MEET CLASS "C" REQUIREMENTS.
11 TO BE MEASURED AT SURFACE Z
12 TEXT ON PART IS FOR REFERENCE ONLY. TEXT AND TEXT LOCATION MAY VARY DEPENDING ON PART NUMBER AND/OR TOOL.

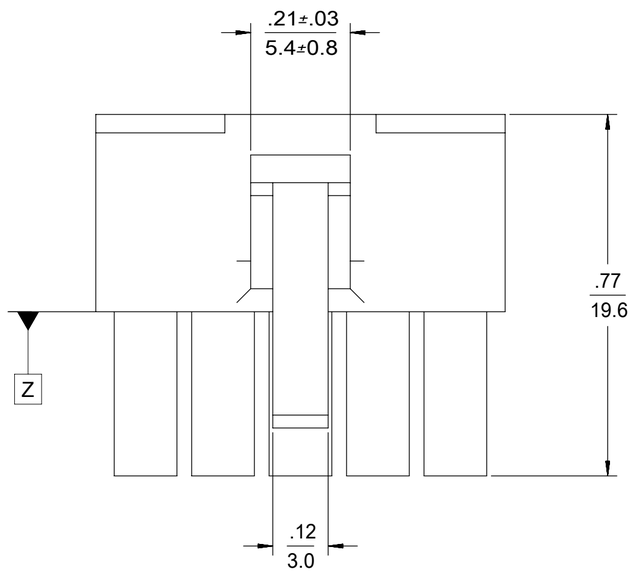

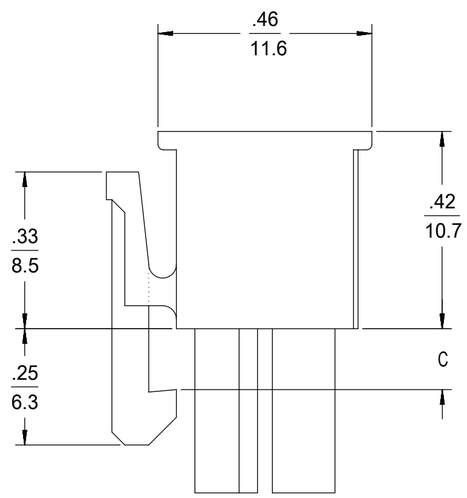

4-24 CKT

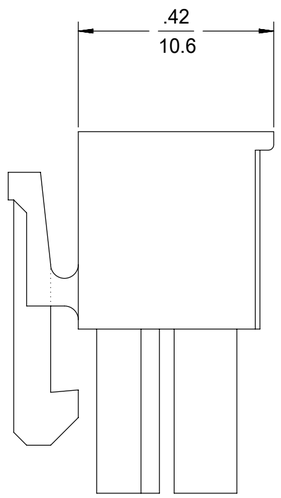

2 CKT ONLY

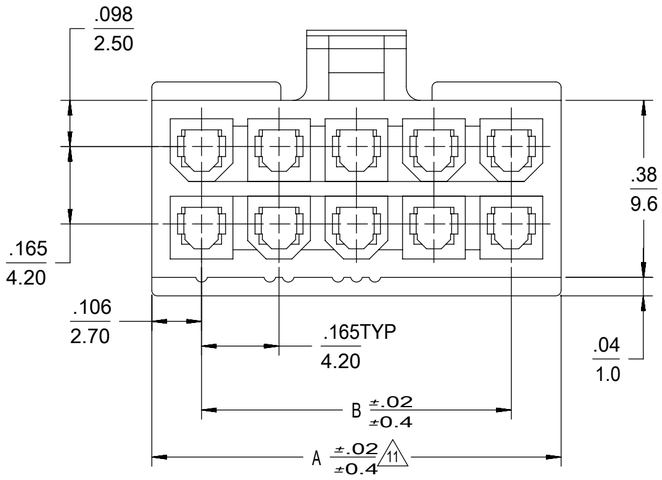

A	B	C	NO. OF CKTS.
2.031/(51.60)	1.819/(46.20)	.142/ (3.60)	24
1.866/(47.40)	1.654/(42.00)		22
1.701/(43.20)	1.488/(37.80)		20
1.535/(39.00)	1.323/(33.60)		18
1.370/(34.80)	1.157/(29.40)	.129/ (3.30)	16
1.205/(30.60)	0.992/(25.20)		14
1.039/(26.40)	0.827/(21.00		12
0.874/(22.20)	0.661/(16.80)		10
0.709/(18.00)	0.496/(12.60)		8
0.543/(13.80	0.331/(8.40)		6
0.378/(9.60)	0.165/(4.20)		4
0.213/(5.40)	—		2

QUALITY SYMBOLS
FA = 0
FC = 0
FP = 0
▼ = 0
C = 0
☒ = 0
■ = 0
C = 0

THIS DRAWING CONTAINS INFORMATION THAT IS PROPRIETARY TO MOLEX ELECTRONIC TECHNOLOGIES, LLC AND SHOULD NOT BE USED WITHOUT WRITTEN PERMISSION

OBS -225 P/N'S
EC NO: 105893 2016/03/25
DRWN: CSLAFTER
CHK'D:
APPR: FSMITH 2016/07/15

GENERAL TOLERANCES (UNLESS SPECIFIED)

	MM	INCH
4 PLACES	±	±
3 PLACES	±	± 0.01
2 PLACES	± 0.25	± 0.015
1 PLACES	± 0.38	±
0 PLACES	±	±

ANGULAR TOL ± 0.5

DRAFT WHERE APPLICABLE MUST REMAIN WITHIN DIMENSIONS

REV J14

DIMENSION UNITS: IN/MM
SCALE: 4:1
DRWN BY: S.MOCHIZUKI DATE: '90/02/22
CHK'D BY: M.FUKUSHIMA DATE: '97/01/08
APPR BY: FSMITH DATE: 2011/02/21
DRAWING SIZE: C
THIRD ANGLE PROJECTION

molex®

MINIFIT JR
RECEPTACLE HOUSING DUAL ROW 2-24 CKT

PRODUCT CUSTOMER DRAWING

SERIES	MATERIAL NUMBER	CUSTOMER
5557	SEE CHART	GENERAL MARKET

DOCUMENT NUMBER	DOC TYPE	DOC PART	SHEET NUMBER
SD-5557-003	PSD	000	1 OF 2

RELEASE STATUS | RELEASE DATE

FORMAT: Eng-lega-master-tb-prod-C
REVISION: C
DATE: 2016/02/04

LEGEND

*

CIRCUIT SIZE

RECEPTACLE

MATERIAL
(SEE NOTE 1)

(NOT TO SCALE)

	V-0 (BLACK)		V-0 (NATURAL)	
	39-03-9242	5557-24R-400	39-01-2245	5557-24R-210
*	39-03-9222	5557-22R-400	39-01-2225	5557-22R-210
*	39-03-9202	5557-20R-400	39-01-2205	5557-20R-210
	39-03-9182	5557-18R-400	39-01-2185	5557-18R-210
	39-03-9162	5557-16R-400	39-01-2165	5557-16R-210
	39-03-9142	5557-14R-400	39-01-2145	5557-14R-210
	39-03-9122	5557-12R-400	39-01-2125	5557-12R-210
	39-03-9102	5557-10R-400	39-01-2105	5557-10R-210
	39-03-9082	5557-08R-400	39-01-2085	5557-08R-210
	39-03-9062	5557-06R-400	39-01-2065	5557-06R-210
	39-03-9042	5557-04R-400	39-01-2045	5557-04R-210
	39-03-9022	5557-02R-400	39-01-2025	5557-02R-210

* = CONSULT FACTORY FOR AVAILABILITY.

	V-2 (BLUE)		V-2 (GREEN)		V-2 (YELLOW)		V-2 (RED)		V-2 (BLACK)		V-2 (NATURAL)	
							–	–	*	39-01-3245	5557-24R-BL	39-01-2240	5557-24R
							–	–		39-01-3225	5557-22R-BL	39-01-2220	5557-22R
							–	–		39-01-3205	5557-20R-BL	39-01-2200	5557-20R
							–	–	*	39-01-3185	5557-18R-BL	39-01-2180	5557-18R
							–	–	*	39-01-3165	5557-16R-BL	39-01-2160	5557-16R
							–	–		39-01-3145	5557-14R-BL	39-01-2140	5557-14R
							–	–		39-01-3125	5557-12R-BL	39-01-2120	5557-12R
*	39-02-7108	5557-10R-BU					* 39-02-8100	5557-10R-RE		39-01-3105	5557-10R-BL	39-01-2100	5557-10R
							–	–		39-01-3085	5557-08R-BL	39-01-2080	5557-08R
			*	39-02-7069	5557-06R-GRE	* 39-02-8061	5557-06R-YE	–	–	39-01-3065	5557-06R-BL	39-01-2060	5557-06R
						* 39-02-8041	5557-04R-YE	* 39-02-8040	5557-04R-RE	39-01-3045	5557-04R-BL	39-01-2040	5557-04R
			*	39-02-7029	5557-02R-GRE	* 39-02-8021	5557-02R-YE	–	–	39-01-3025	5557-02R-BL	39-01-2020	5557-02R

THIS DRAWING CONTAINS INFORMATION THAT IS PROPRIETARY TO MOLEX ELECTRONIC TECHNOLOGIES, LLC AND SHOULD NOT BE USED WITHOUT WRITTEN PERMISSION

QUALITY SYMBOLS
= 0
= 0
= 0
= 0
= 0
= 0
= 0
© = 0

OBS -225 P/N'S
EC NO: 105893 2016/03/25
DRWN: CSLAFTER
CHK'D: FSMITH 2016/07/15
APPR:
REV J14

GENERAL TOLERANCES (UNLESS SPECIFIED)

	MM	INCH
4 PLACES	±	±
3 PLACES	±	± 0.01
2 PLACES	± 0.25	± 0.015
1 PLACES	± 0.38	±
0 PLACES	±	±
ANGULAR TOL	± 0.5	

DRAFT WHERE APPLICABLE MUST REMAIN WITHIN DIMENSIONS

DIMENSION UNITS: IN/MM
SCALE: 4:1
DRWN BY: S.MOCHIZUKI DATE: '90/02/22
CHK'D BY: M.FUKUSHIMA DATE: '97/01/08
APPR BY: FSMITH DATE: 2011/02/21
DRAWING SIZE: C
THIRD ANGLE PROJECTION

MINIFIT JR
RECEPTACLE HOUSING DUAL ROW 2-24 CKT

PRODUCT CUSTOMER DRAWING

SERIES	MATERIAL NUMBER	CUSTOMER
5557	SEE CHART	GENERAL MARKET

DOCUMENT NUMBER	DOC TYPE	DOC PART	SHEET NUMBER
SD-5557-003	PSD	000	2 OF 2

RELEASE STATUS P1 RELEASE DATE 15.07.2016 22:43:50

FORMAT: Eng-lega-master-tb-prod-C
REVISION: C
DATE: 2016/02/04