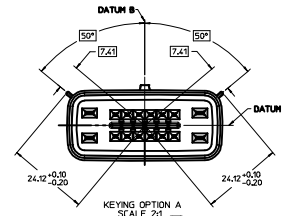

KEYING OPTION A
SCALE 2:1 (B14)

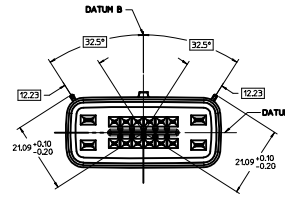

KEYING OPTION E
SCALE 2:1 (B14)

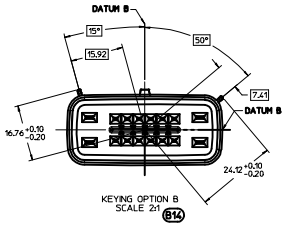

KEYING OPTION B
SCALE 2:1 (B14)

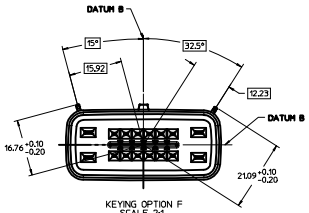

KEYING OPTION F
SCALE 2:1 (B14)

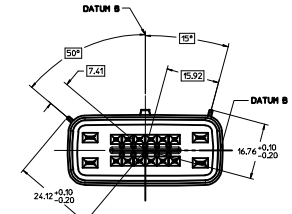

KEYING OPTION C
SCALE 2:1 (B14)

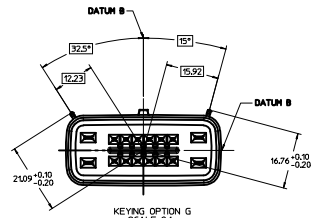

KEYING OPTION G
SCALE 2:1 (B14)

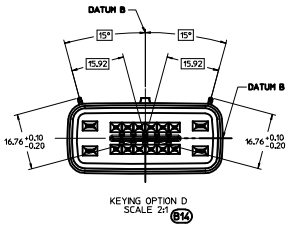

KEYING OPTION D
SCALE 2:1 (B14)

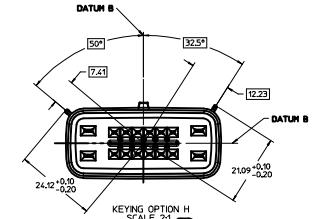

KEYING OPTION H
SCALE 2:1 (B14)

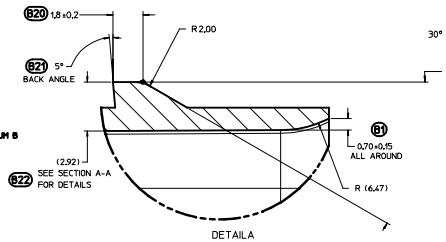

DETAIL A
SCALE 10:1

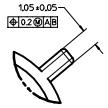

DETAIL C
SCALE 10:1
APPLIES 2X
SEE KEYING OPTION VIEWS
FOR POSITIONS

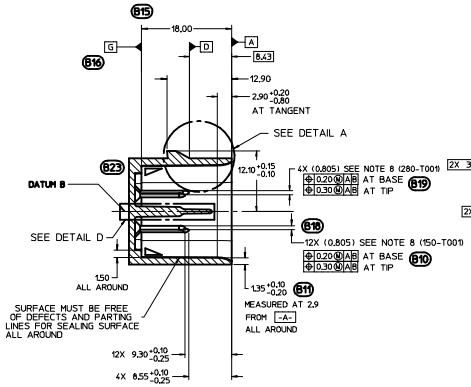

SECTION A-A

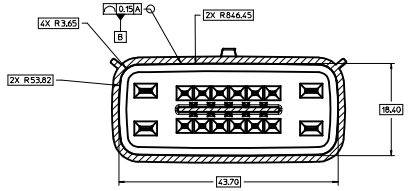

SECTION C-C
AT DATUM -D- (B5)
SCALE 3:1

999-S-016-2-H01	H	YELLOW
999-S-016-2-G01	G	YELLOW
999-S-016-2-F01	F	YELLOW
999-S-016-2-E01	E	YELLOW
999-S-016-2-D01	D	BLACK
999-S-016-2-C01	C	DARK GRAY
999-S-016-2-B01	B	GREY
999-S-016-2-A01	A	BLACK
EWCAP PN	OPTION	MATING CONNECTOR COLOR

(B17)

NOTES: UNLESS OTHERWISE SPECIFED

1. DRAFT ANGLE PERMISSIBLE 0.25°MAXIMUM.
2. ALL DIMENSIONS SHOWN IN MILLIMETERS.
3. DIMENSIONING AND TOLERANCING PER ASME Y14.5M-1994
4. RADII ON ALL CORNERS SHOWN SHARP OR ALL UNSPECIFED RADII: 0.25 EXCEPT AS NOTED.
5. STANDARD COLORS FOR POLARIZATION (SEE CHART). DEVATION REQUIRES APPROVAL OF AUTHORIZED PERSON.
6. A FULL SHROUD ON THE MATING CONNECTOR IS REQUIRED TO INSURE THAT THE CONNECTOR-HEADER POLARIZATION FEATURES (OPTIONS A THRU H) WILL FUNCTION. THE SHROUD ALSO PREVENTS SCOOP DAMAGE TO THE HEADER PINS. REFER TO "SAE/USCAR-12 CONNECTOR DESIGN GUIDE LINES" FOR ADDITIONAL INFORMATION.
7. REFER TO USCAR/EWCAP PART LIST AS FOUND ON WEBSITE http://www.uscarteams.org
8. FOR BLADE TERMINAL DESIGN INFORMATION SEE EWCAP DWG. # EWCAP-001 (B13)
9. THIS IS A 100% CAD GENERATED PART. THE CAD MATHEMATICAL DATA IS THE MASTER FOR THIS PART. FOR DIMENSIONAL OR ANY INFORMATION NOT SHOWN ON THIS DRAWING, ANALYZE THE CAD MODEL. (B12)

IF HEADER IS RECESSED INTO POCKET, THESE DIMENSIONS REPRESENT THE MINIMUM CLEARANCE REQUIRED FOR THE MATING SHROUD.

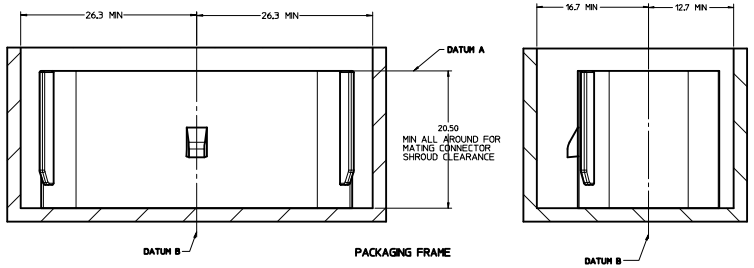

PACKAGING FRAME

SCALE 1:1

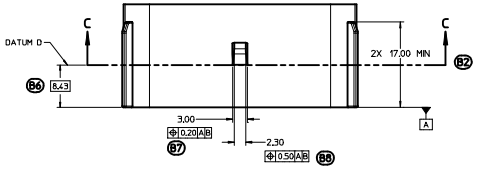

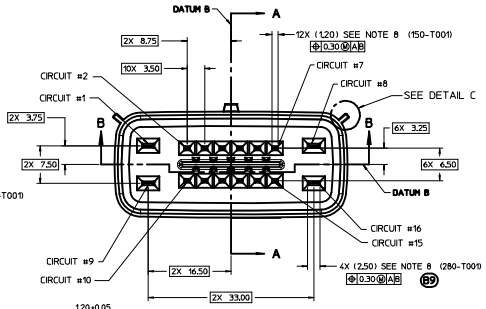

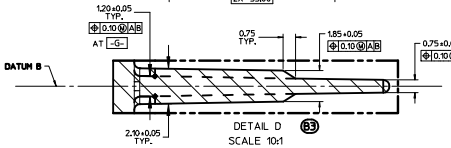

DETAIL D
SCALE 10:1 (B3)

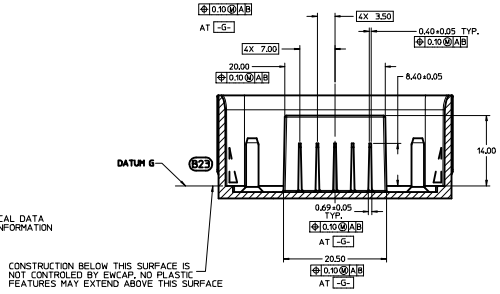

SECTION B-B (B4)
SCALE 3:1

088	B23	ADDED DRAFT DIRECTION SYMBOL	3-25-11		
088	B22	ADDED REF DIMENSION FOR	3-11-11		
		LATCH HEIGHT			
088	B21	REMOVED THE WORD "OPTION"	3-11-11		
		AT VIEW OF BACK ANGLE			
088	B20	CHANGED FROM 1.79 TO 1.80	3-11-11		
088	B19	ADDED 4X (0.805) 0.20 Ⓜ A B AT BASE	1-14-11		
		AND 0.30 Ⓜ A B AT TIP FOR 2.8			
		BLADE TERMINALS			
088	B18	CHANGED 16X TO 12X FOR THE 1.5	1-14-11		
		BLADE TERMINALS			
088	B17	UPDATED CONNECTOR COLORS	1-14-11		
088	B16	ADDED -G-	5-04-10		
088	B15	REMOVED // 0.10 Ⓜ A B	5-04-10		
088	B14	REMOVED SHORTING BAR NOTE	5-04-10		
088	B13	UPDATED NOTE 8 REMOVED REV F	5-04-10		
088	B12	ADDED NOTE 9	5-04-10		
088	B11	ADDED DIM 1.35+0.10/-0.20 MEASURED	5-11-10		
		AT 2.9 FROM -A- ALL AROUND			
088	B10	ADDED SEE NOTE 8	5-04-10		
088	B9	2.50 WAS 2.80. ADDED (280-T001)	5-11-10		
088	B8	ADDED 0.50 A B	5-04-10		
088	B7	ADDED 0.20 A B	5-04-10		
088	B6	ADDED DIM 8.43	5-04-10		
088	B5	ADDED SEC C-C	5-04-10		
088	B4	UPDATED SEC B-B	5-04-10		
088	B3	ADDED DETAIL D	5-04-10		
088	B2	ADDED SEC C-C	5-04-10		
088	B1	ADDED DIM 0.70±0.15 ALL AROUND	5-04-10		
088	B	RELEASED	5-04-10	KC	MV
CHANGE SERIAL NUMBER	LET	REVISION RECORD	DATE	DWN	CHK

TOLERANCES (UNLESS OTHERWISE SPECIFIED)
DIMENSIONS ARE IN MILLIMETERS
ANGLES ±3°
.X ±0.2 .XX ±0.10

THIRD ANGLE PROJECTION

EWCAP

SCALE	DRAWN BY	CHECKED BY	DATE
3:1	K. CUNNINGHAM	V. KOSHY	1-14-11

TITLE
DIRECT CONNECT INTERFACE
16 WAY (2 X 8) 1.5 MM SEALED MALE

SHEET	DRAWING NUMBER	SIZE	DO NOT SCALE DRAWING COMPUTER AIDED DRAWING	REVISION LEVEL
1 OF 1	999-S-016-2-Z02	E		B

molex

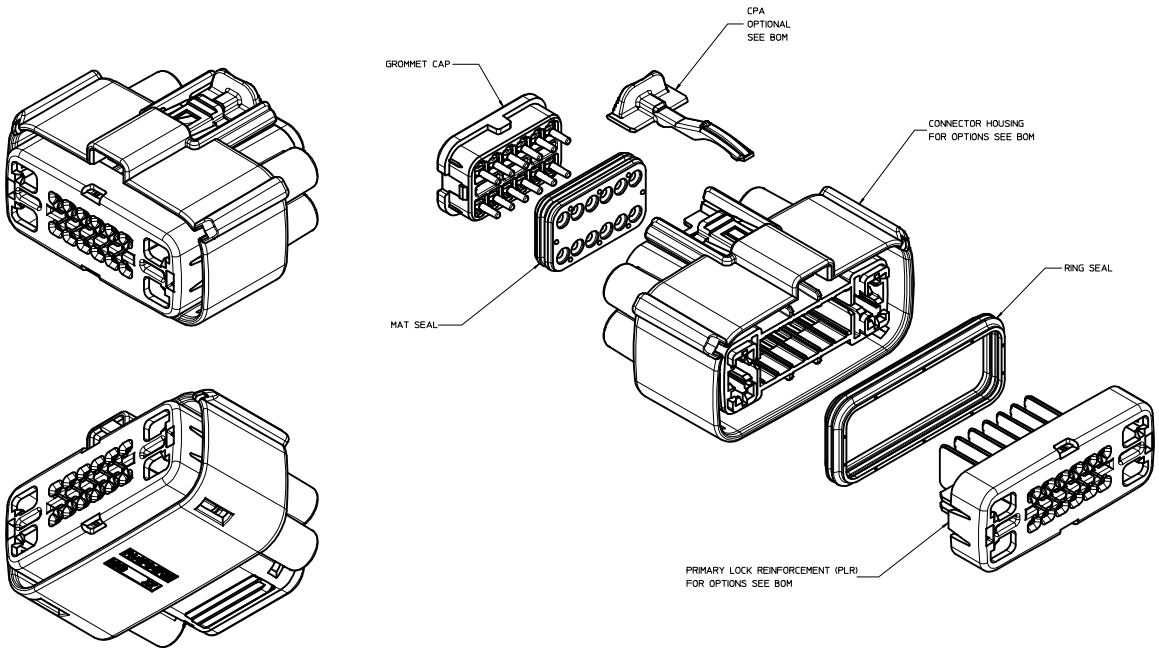

MX150 16 WAY HYBRID RECPT HRN CONN - STANDARD (STD)

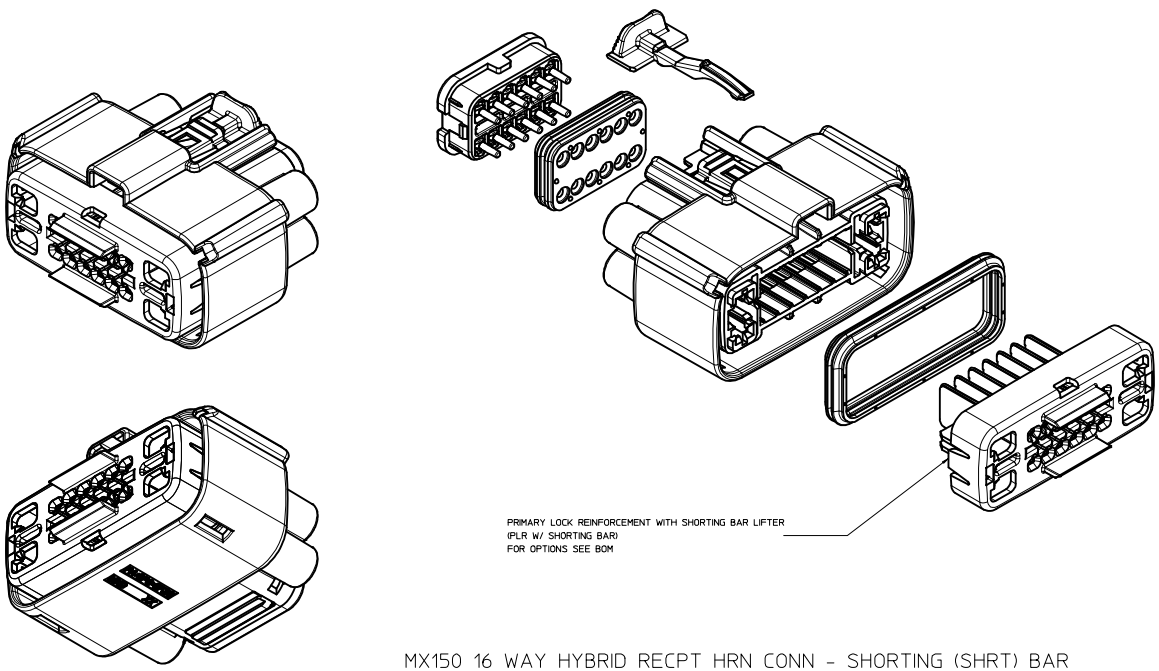

MX150 16 WAY HYBRID RECPT HRN CONN - SHORTING (SHRT) BAR
UNLESS COMPONENT NOTED, SEE STANDARD ASSEMBLY

TABLE OF CONTENTS

SHEET NO.	SHEET DESCRIPTION
1	NOTES
2	KEY CONFIGURATIONS
3	RECEPTACLE SEALED ASSEMBLY
4-7	BOM

NOTES: VALID UNLESS OTHERWISE SPECIFIED

1. GENERAL:
a. APPLICATION SPECIFICATION SEE: AS-33472-100
-CONTAINS: PRODUCT INTRODUCTION, PRODUCT SUMMARY, CONNECTOR ASSEMBLY, PACKAGING INFORMATION, CONNECTOR MATING, SERVICE INSTRUCTIONS, ELECTRICAL CONTINUITY CHECKING, CRIMPING, AND TROUBLESHOOTING.
-STANDARD (NON-SHRT) CONFIGURATIONS DESIGNED TO MATE WITH DEVICE CONNECTION AS SPECIFIED IN DRAWING EWCAP 999-S-016-2-Z02, AVAILBLE AT <http://ewcap.uscarteams.org/>.
-STANDARD (NON-SHRT) CONFIGURATIONS AND SHORTING BAR CONFIGURATIONS DESIGNED TO MATE WITH BLADE HOUSING ASSEMBLY SPECIFIED IN DRAWING SD-33486-161.
-FOR 1.5mm RECEPTACLE TERMINALS TO BE USED WITH THIS ASSEMBLY, SEE MOLEX DRAWING SD-33012-002.
-1.5mm TERMINALS TO BE USED WITH WIRE WITHIN DIAMETER RANGE OF 1.4mm TO 2.69mm.
-FOR 2.8mm RECEPTACLE TERMINALS TO BE USED WITH THIS ASSEMBLY SEE TABLE.
-2.8mm TERMINALS TO BE USED WITH WIRE WITHIN DIAMETER RANGE OF 1.50mm TO 3.30mm.
-ASSEMBLY SHIPPED WITH PLR AND CPA IN PRE-LOCK POSITION (SEE SECTION Z-Z PRE-LOCK).
-IN THE EVENT THAT THE PLR IS FOUND IN THE SEATED (FINAL LOCK) POSITION, REFER TO MOLEX SPECIFICATION PS-34646-001, AVAILABLE AT www.molex.com <http://www.molex.com>.
-ASSEMBLY CONFORMS TO SAE/USCAR-2 REV.4 WITH THE FOLLOWING EXCEPTIONS:
ENGAGEMENT FORCE TO MOVE CPA FROM PRE-LOCK TO FINAL LOCK POSITION WHEN UNMATED: 40N MIN.
DISENGAGEMENT FORCE TO MOVE CPA FROM FINAL LOCK TO PRE-LOCK POSITION: 3N MIN, 40N MAX.
-TERMINAL INSERTION FORCE FOR WIRE DIAMETER ABOVE 2.5mm NOT EXCEEDING 2.69mm SHALL NOT EXCEED 40 NEWTONS.
b. PRODUCT SPECIFICATION SEE: PS-33476-000
CONTAINS: PRODUCT INTRODUCTION, PRODUCT SUMMARY, RATINGS (CURRENT, TEMPERATURE, SEALING, AND FLAMMABILITY), AND PRODUCT VALIDATION.
c. PACKAGING SPECIFICATION PER MOLEX DRAWING: PK-30907-895
d. PARTS MUST BE IN COMPLIANCE TO MOLEX CHEMICAL SUBSTANCES FOR PRODUCTS SPECIFICATION: ES-40000-5016
e. DATA MUST BE SUBMITTED UNDER THE MOLEX PART NUMBER TO IMDS (COMPANY ID#13255)
f. FOR INFORMATION ON 16 WAY HYBRID RECEPT HRN ASSY WITH CLIPSLOT SEE E-33476-181

2. DESIGN - MATERIALS:
a. SEE BOM TABLE

3. DESIGN - GEOMETRY:
a. THIS IS A 100% CAD GENERATED PART. THE CAD MATHEMATICAL DATA IS THE MASTER FOR THIS PART. FOR DIMENSIONAL OR ANY INFORMATION NOT SHOWN ON THIS DRAWING, ANALYZE THE CAD MODEL.
b. GEOMETRIC DIMENSIONS AND TOLERANCES PER ASME Y14.5M - 1994
c. EDGES AND UNDIMENSIONED DETAILS PER ISO13715
d. CORNERS SHOWN AS SHARP TO BE R 0.2 MAX.
e. LETTERING SHALL BE 0.15 MAX RAISED IN 0.25 MAX RECESS PAD. THIS INCLUDES RECYCLING CODE, CAVITY ID, VENDOR IDENTIFICATION, AND CUSTOMER MATERIAL NUMBER.
f. VISUAL DEFECTS SHALL MEET COSMETIC STANDARD PS-45499-002 (Class B)
g. LASER MARKING: TBD

TYCO 2.8mm CABLE SEAL TERMINAL

FORD P/N FEMALE RECEPTACLE	GRIP SIZE
IFIT-14474-KA	12
IFIT-14474-JA	14
IFIT-14474-HA	16
IFIT-14474-GA	18
IFIT-14474-FA	20
IFIT-14474-EA	22

INSPECTION NUMBER LOG
LAST NUMBER USED:
ADDED:
REMOVED:

REV	DESCRIPTION
BX	UPDATED TO PLANNED OBSOLESCENCE
BW	ADD NEW P/N 33476-4043 THRU 33476-4046
BV10	ADD NEW P/N 33476-4042
BV9	ADD NEW P/N 33476-4041
BV8	ADD NEW P/N 33476-4037 33476-4038 33476-4039 33476-4040
BV7	ADDED NEW P/N 33476-4023 33476-4024 33476-4025 33476-4026 33476-4027 33476-4028 33476-4029 33476-4030 33476-4031 33476-4032 33476-4033 33476-4034 33476-4035 33476-4036
BV6	ADD NEW P/N 33476-4022 ADD NEW P/N 33476-4016 33476-4017
BV5	33476-4018 33476-4019 33476-4020 33476-4021
BV4	ADD NEW P/N 33476-4014 33476-4015
BV3	ADD NEW P/N 33476-4012 33476-4013
BV2	ADD NEW P/N 33476-4011
BV1	CHANGE PART NUMBER STATUS ADD NEW P/N 33476-4009 33476-4010 ADD NEW P/N 33476-4006 33476-4007
BV	33476-4008

ENTER DESCRIPTION
EC NO: UAU2016-0550
DRWN:APROFFITT 2015/10/21
CHKD:KBORUSZENSKI 2015/10/21
APPR:VKOSHY 2015/10/29
REV: BX

QUALITY SYMBOLS: =0 =0 =0

GENERAL TOLERANCES (UNLESS SPECIFIED)

	mm	INCH
4 PLACES	± ---	± ---
3 PLACES	± ---	± ---
2 PLACES	± 0.1	± ---
1 PLACE	± 0.3	± ---
0 PLACE	±	±
ANGULAR	± 3 °	

DRAFT WHERE APPLICABLE MUST REMAIN WITHIN DIMENSIONS

DIMENSION STYLE: MM ONLY
SCALE: 3:1
DESIGN UNITS: METRIC
THIRD ANGLE PROJECTION

DRAWN BY: KCUNNINGHAM DATE: 2011/10/27
CHECKED BY DATE
APPROVED BY DATE
MATERIAL NO.: SEE BOM
SIZE: E

TITLE: MX150 16 WAY HYBRID RECPT SEALED ASSEMBLY

molex

DOCUMENT NO.: SD-33476-161
SHEET NO.: 1 OF 8

THIS DRAWING CONTAINS INFORMATION THAT IS PROPRIETARY TO MOLEX INCORPORATED AND SHOULD NOT BE USED WITHOUT WRITTEN PERMISSION

KEY CONFIGURATIONS

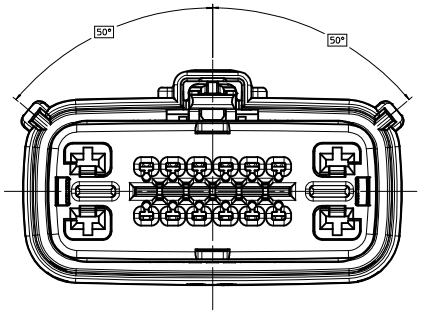

KEY A

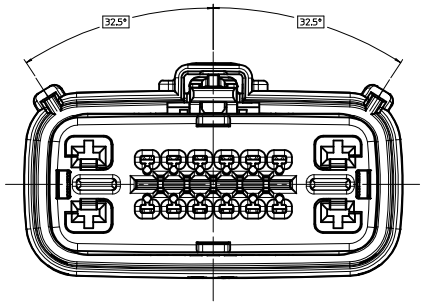

KEY E

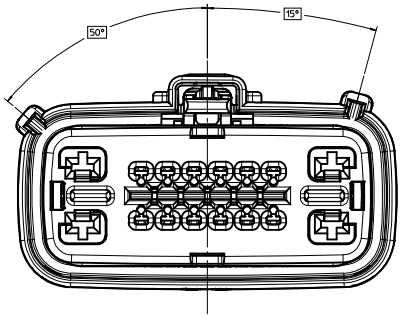

KEY B

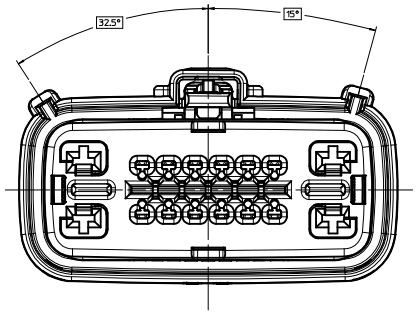

KEY F

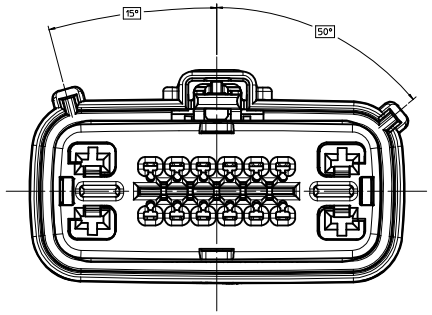

KEY C

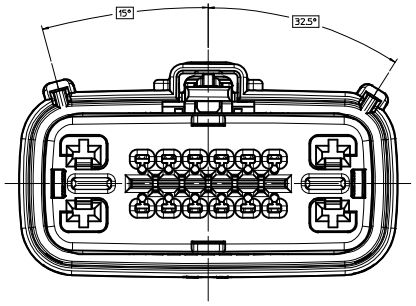

KEY G

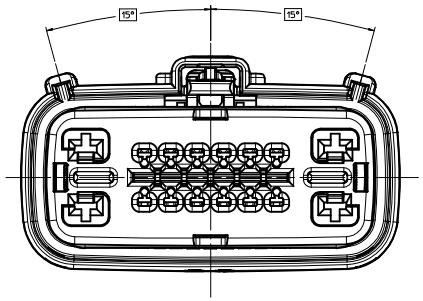

KEY D

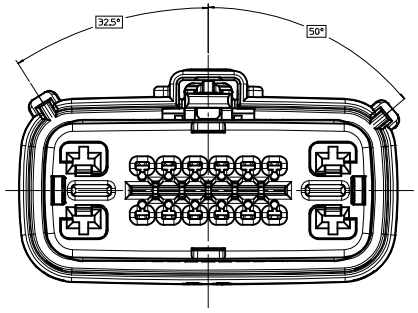

KEY H

ENTER DESCRIPTION EC NO: UAU2016-0550 DRWN:APROFFITT 2015/10/21 CHKD:KBORUSZEWSKI 2015/10/21 APPR:YKOSHY 2015/10/29 DESCRIPTION REV BX	QUALITY SYMBOLS =0 =0 =0	GENERAL TOLERANCES (UNLESS SPECIFIED) mm / INCH 4 PLACES ± --- / ± --- 3 PLACES ± --- / ± --- 2 PLACES ± 0.1 / ± --- 1 PLACE ± 0.3 / ± --- 0 PLACE ± / ± ANGULAR ± 3 ° DRAFT WHERE APPLICABLE MUST REMAIN WITHIN DIMENSIONS	DIMENSION STYLE MM ONLY DRAWN BY KCUNNINGHAM DATE 2011/10/27 CHECKED BY DATE APPROVED BY DATE MATERIAL NO. SEE BOM	SCALE 3:1 DESIGN UNITS METRIC THIRD ANGLE PROJECTION TITLE MX150 16 WAY HYBRID RECPT SEALED ASSEMBLY molex DOCUMENT NO. SD-33476-161 SHEET NO. 2 OF 8 SIZE E	THIS DRAWING CONTAINS INFORMATION THAT IS PROPRIETARY TO MOLEX INCORPORATED AND SHOULD NOT BE USED WITHOUT WRITTEN PERMISSION

RCPT. HRN. CONN.

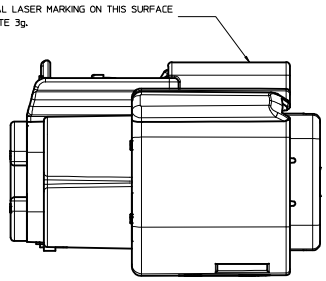

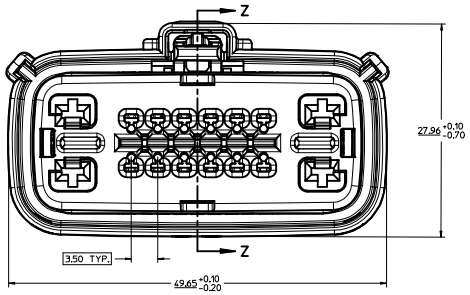

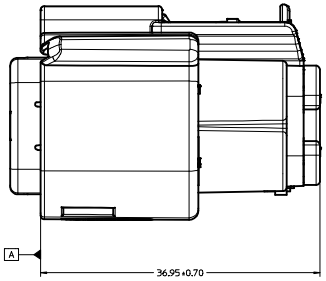

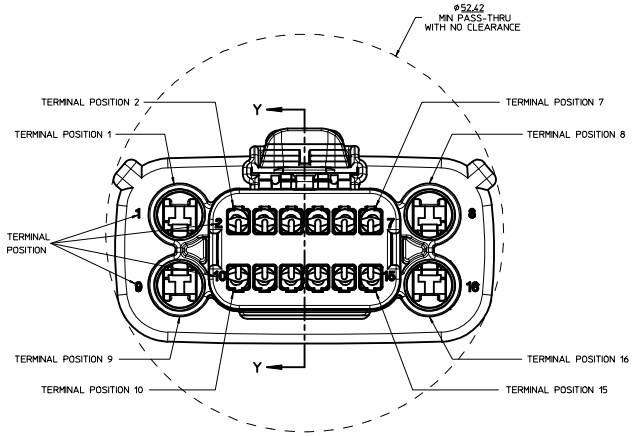

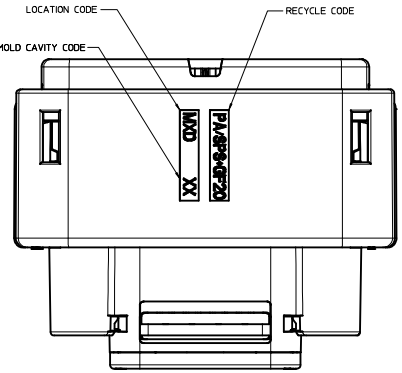

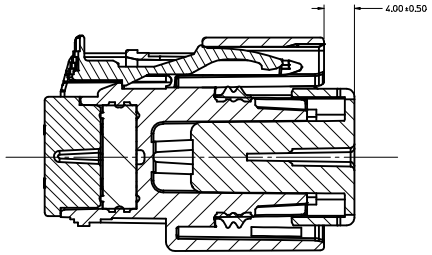

PRIMARY LOCK REINFORCEMENT (PLR) SHOWN
IN PRE-STAGED POSITION
SECTION Z-Z

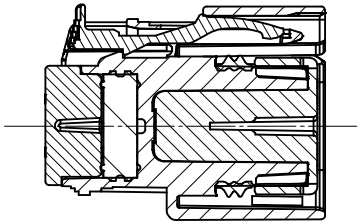

PRIMARY LOCK REINFORCEMENT (PLR) SHOWN
IN FINAL-LOCK POSITION
SECTION Y-Y

ENTER DESCRIPTION EC NO: UAU2016-0550 DRWN:APROFFITT 2015/10/21 CHKD:KBORUSZEWSKI 2015/10/21 APPR:VKOSHY 2015/10/29 DESCRIPTION REV BX	QUALITY SYMBOLS =0 =0 =0	GENERAL TOLERANCES (UNLESS SPECIFIED) mm / INCH 4 PLACES ±--- / ±--- 3 PLACES ±--- / ±--- 2 PLACES ±0.1 / ±--- 1 PLACE ±0.3 / ±--- 0 PLACE ± / ± ANGULAR ± 3 ° DRAFT WHERE APPLICABLE MUST REMAIN WITHIN DIMENSIONS	DIMENSION STYLE MM ONLY DRAWN BY KCUNNINGHAM DATE 2011/10/27 CHECKED BY DATE APPROVED BY DATE MATERIAL NO. SEE BOM	SCALE 4:1 TITLE MX150 16 WAY HYBRID RECPT SEALED ASSEMBLY DOCUMENT NO. SD-33476-161 SIZE E	DESIGN UNITS METRIC THIRD ANGLE PROJECTION molex SHEET NO. 3 OF 8	THIS DRAWING CONTAINS INFORMATION THAT IS PROPRIETARY TO MOLEX INCORPORATED AND SHOULD NOT BE USED WITHOUT WRITTEN PERMISSION	

BOM SHEET 1

ASSEMBLY DESCRIPTION	ASSEMBLY PART NUMBER	A	B	C	D	E	F	G	H	A	C	P	PS	CPA	2	3	4	5	6	7	10	11	12	13	14	15	STATUS
KEY A, BLACK	33476-1915	A										P				3			6			11	12	13	14		
KEY A, BLACK	33476-1908	A										P			2	3		5			10			13		15	
KEY A, BLACK	33476-1907	A										P			2		4			7	10	11		13		15	
KEY A, BLACK	33476-1906	A										P			2	3										15	
KEY A, BLACK	33476-1905	A										P			2		4	5	6	7	10	11	12		14	15	
KEY A, BLACK	33476-1904	A										P							6						14		
KEY A, BLACK	33476-1903	A										P				3		5	6			11				15	
KEY A, BLACK	33476-1902	A										P								7			12	13	14	15	
KEY A, BLACK	33476-1901	A										P			2					7			12	13	14	15	
KEY A, BLACK	33476-1890	A										P				3			6	7				13			
KEY A, BLACK	33476-1889	A										P			2					7				13		15	
KEY A, BLACK	33476-1888	A										P			2					7	10	11					
KEY B, LT. GRAY	33476-1887		B									P						5						13	14		
KEY B, LT. GRAY	33476-1886		B									P						5						13	14	15	
KEY A, BLACK	33476-1885	A										P										11	12	13	14	15	
KEY A, BLACK	33476-1884	A										P							6		10	11	12	13	14	15	
KEY A, BLACK	33476-1883	A										P				3			6		10	11	12	13	14	15	
KEY A, BLACK	33476-1882	A										P							6			11			14		
KEY A, BLACK	33476-1880	A										P						5	6					13	14	15	
KEY A, BLACK	33476-1879	A										P						5	6								
KEY A, BLACK	33476-1847	A										P			2		4			7						15	
KEY A, BLACK	33476-1846	A										P			2	3					10		12	13	14	15	
KEY A, BLACK	33476-1845	A										P			2						10		12	13	14	15	
KEY A, BLACK	33476-1844	A										P					4						12				
KEY A, BLACK	33476-1843	A										P				3			6				12				
KEY B, LT. GRAY	33476-1842		B									P					4						12				
KEY A, BLACK	33476-1831	A										P			2	3			6			11					
KEY A, BLACK	33476-1821	A										P							6	7				13			
KEY A, BLACK	33476-1811	A										P			2	3			6	7				13			
KEY A, BLACK	33476-1801	A										P								7				13			
KEY H W/ CPA & SHRT. BAR, YELLOW	33476-1712								H				PS	CPA	2	3			6	7	10	11			14	15	
KEY H W/ CPA & SHRT. BAR, YELLOW	33476-1711								H				PS	CPA													
KEY H W/ CPA & SHRT. BAR, YELLOW	33476-1710								H				PS	CPA		3			6	7	10	11			14		
KEY H W/ CPA & SHRT. BAR, YELLOW	33476-1709								H				PS	CPA		3			6	7	10	11	12	13	14		
KEY H W/ CPA & SHRT. BAR, YELLOW	33476-1708								H				PS	CPA	2											15	
KEY H W/ CPA & SHRT. BAR, YELLOW	33476-1707								H				PS	CPA	2								12	13		15	
KEY H W/ CPA & SHRT. BAR, YELLOW	33476-1706								H				PS	CPA									12	13			
KEY H W/ SHRT. BAR, YELLOW	33476-1704								H				PS														
KEY G W/ SHRT. BAR, BROWN	33476-1703							G					PS														
KEY F W/ SHRT. BAR, LT GRAY	33476-1702						F						PS														
KEY E W/ SHRT. BAR, BLACK	33476-1701					E							PS														
KEY A, BLACK	33476-1671	A										P							6								
KEY A, BLACK	33476-1661	A										P				3			6								
KEY A, BLACK	33476-1651	A										P			2	3			6								
KEY A, BLACK	33476-1641	A										P			2	3	4	5	6	7	10	11	12	13	14	15	
KEY B, LT. GRAY	33476-1630		B									P							6	7	10	11	12	13	14		
KEY D W/ CPA, GREEN	33476-1629				D							P		CPA	2											15	
KEY C W/ CPA, BROWN	33476-1628			C								P		CPA	2											15	
KEY B W/ CPA, LT. GRAY	33476-1627		B									P		CPA	2											15	
KEY A W/ CPA, BLACK	33476-1626	A										P		CPA	2											15	
KEY B, LT. GRAY	33476-1625		B									P											12	13	14		
KEY D, GREEN	33476-1624				D							P			2											15	
KEY C, BROWN	33476-1623			C								P			2											15	
KEY B, LT. GRAY	33476-1622		B									P			2											15	
KEY A, BLACK	33476-1621	A										P			2											15	
KEY A, YELLOW	33476-1620									A		P							6		10	11			14		
KEY D W/ CPA, GREEN	33476-1619				D							P		CPA	2												
KEY C W/ CPA, BROWN	33476-1618			C								P		CPA	2												
KEY B W/ CPA, LT. GRAY	33476-1617		B									P		CPA	2												
KEY A W/ CPA, BLACK	33476-1616	A										P		CPA	2												
KEY A, YELLOW	33476-1615									A		P							6	7	10	11			14		
KEY D, GREEN	33476-1614				D							P			2												
KEY C, BROWN	33476-1613			C								P			2												
KEY B, LT. GRAY	33476-1612		B									P			2												
KEY A, BLACK	33476-1611	A										P			2												
KEY A, YELLOW	33476-1610									A		P													14		
KEY D W/ CPA, GREEN	33476-1609				D							P		CPA													
KEY C W/ CPA, BROWN	33476-1608			C								P		CPA													
KEY B W/ CPA, LT. GRAY	33476-1607		B									P		CPA													
KEY A W/ CPA, BLACK	33476-1606	A										P		CPA													
KEY A, YELLOW	33476-1605									A		P															
KEY D, GREEN	33476-1604				D							P															
KEY C, BROWN	33476-1603			C								P															
KEY B, LT. GRAY	33476-1602		B									P															
KEY A, BLACK	33476-1601	A										P															

PLANNED OBSOLESCENCE
SEE DRAWING SD-34985-8002
FOR REPLACEMENT P/N'S
34985-XXXX

BLOCKED TERMINAL

CAVITY WITH A NUMBER INDICATES BLOCKED TERMINAL POSITION
CAVITY WITHOUT A NUMBER INDICATES OPEN TERMINAL POSITION

DESCRIPTION	COLOR	MATERIAL
GROMMET CAP	BLACK	SPS/NYLON GF20
MAT SEAL	LIGHT BLUE	INHERENTLY LUBRICATED SILICONE
RING SEAL	GREEN	INHERENTLY LUBRICATED SILICONE
CPA	BRIGHT RED	PBT GF30
SHORTING BAR PLR	NATURAL	PBT GF15
STANDARD PLR	NATURAL	SPS/NYLON GF20
HOUSING KEYING OPTION C	DARK GRAY	SPS/NYLON GF20
HOUSING KEYING OPTION A	YELLOW	SPS/NYLON GF20
HOUSING KEYING OPTION H	YELLOW	SPS/NYLON GF20
HOUSING KEYING OPTION G	BROWN	SPS/NYLON GF20
HOUSING KEYING OPTION F	LIGHT GRAY	SPS/NYLON GF20
HOUSING KEYING OPTION E	BLACK	SPS/NYLON GF20
HOUSING KEYING OPTION D	GREEN	SPS/NYLON GF20
HOUSING KEYING OPTION C	BROWN	SPS/NYLON GF20
HOUSING KEYING OPTION B	LIGHT GRAY	SPS/NYLON GF20
HOUSING KEYING OPTION A	BLACK	SPS/NYLON GF20

BOM/APPLICABLE COMPONENTS TABLE

TABLE LEGEND	
ABREVIATION	COMPONENT
A	HOUSING KEY A
B	HOUSING KEY B
C	HOUSING KEY C
D	HOUSING KEY D
E	HOUSING KEY E
F	HOUSING KEY F
G	HOUSING KEY G
H	HOUSING KEY H
GC	GROMMET CAP
M	MAT SEAL
P	PLR, STANDARD
PS	PLR, SHRT BAR LIFTER
R	RING SEAL
CPA	CPA

ENTER DESCRIPTION
EC NO: UAU2016-0550
DRWN:APROFFITT 2015/10/21
CHKD:KBORUSZENSKI 2015/10/21
APPR:VKOSHY 2015/10/29
DESCRIPTION
REV
BX

QUALITY SYMBOLS
=0
=0
=0

GENERAL TOLERANCES (UNLESS SPECIFIED)

	mm	INCH
4 PLACES	± ---	± ---
3 PLACES	± ---	± ---
2 PLACES	± 0.1	± ---
1 PLACE	± 0.3	± ---
0 PLACE	±	±
ANGULAR	± 3 °	

DRAFT WHERE APPLICABLE MUST REMAIN WITHIN DIMENSIONS

DIMENSION STYLE: MM ONLY
SCALE
DESIGN UNITS: METRIC
THIRD ANGLE PROJECTION
DRAWN BY: KCUNNINGHAM DATE: 2011/10/27
CHECKED BY DATE
APPROVED BY DATE
MATERIAL NO.: SEE BOM
SIZE: E

TITLE: MX150 16 WAY HYBRID RECPT SEALED ASSEMBLY

molex

DOCUMENT NO.: SD-33476-161
SHEET NO.: 4 OF 8

THIS DRAWING CONTAINS INFORMATION THAT IS PROPRIETARY TO MOLEX INCORPORATED AND SHOULD NOT BE USED WITHOUT WRITTEN PERMISSION

BOM SHEET 2

ASSEMBLY DESCRIPTION	ASSEMBLY PART NUMBER	A	B	C	D	E	F	G	H	A	C	P	PS	CPA	2	3	4	5	6	7	10	11	12	13	14	15	STATUS
KEY A, BLACK	33476-2014	A										P								7	10	11					
KEY H W/ CPA & SHRT. BAR, YELLOW	33476-2012								H				PS	CPA	2	3			6	7	10	11			14	15	
KEY H W/ CPA & SHRT. BAR, YELLOW	33476-2011								H				PS	CPA													
KEY H W/ CPA & SHRT. BAR, YELLOW	33476-2010								H				PS	CPA		3			6	7	10	11			14		
KEY H W/ CPA & SHRT. BAR, YELLOW	33476-2009								H				PS	CPA		3			6	7	10	11	12	13	14		
KEY H W/ CPA & SHRT. BAR, YELLOW	33476-2008								H				PS	CPA	2											15	
KEY H W/ CPA & SHRT. BAR, YELLOW	33476-2007								H				PS	CPA	2								12	13		15	
KEY H W/ CPA & SHRT. BAR, YELLOW	33476-2006								H				PS	CPA									12	13			
KEY H W/ SHRT. BAR, YELLOW	33476-2004								H				PS														
KEY G W/ SHRT. BAR, BROWN	33476-2003							G					PS														
KEY F W/ SHRT. BAR, LT. GRAY	33476-2002						F						PS														
KEY E W/ SHRT. BAR, BLACK	33476-2001					E							PS														
KEY A, BLACK	33476-2000	A										P							6					13		15	
KEY A, BLACK	33476-1999	A										P				3			6	7				13		15	
KEY A W/ CPA, BLACK	33476-1997	A										P		CPA	2		4	5			10		12				
KEY A, BLACK	33476-1996	A										P				3											
KEY H W/ CPA & SHRT. BAR, YELLOW	33476-1995								H				PS	CPA	2	3					10	11	12	13	14	15	
KEY H W/ CPA & SHRT. BAR, YELLOW	33476-1994								H				PS	CPA	2	3			6	7			12	13	14	15	
KEY H W/ CPA & SHRT. BAR, YELLOW	33476-1993								H				PS	CPA	2	3							12	13	14	15	
KEY H W/ CPA & SHRT. BAR, YELLOW	33476-1992								H				PS	CPA	2	3			6	7			12	13	14		
KEY H W/ CPA & SHRT. BAR, YELLOW	33476-1991								H				PS	CPA	2	3			6	7	10	11	12	13	14	15	
KEY A W/ CPA, BLACK	33476-1989	A										P		CPA	2	3		5	6		10	11	12	13	14	15	
KEY A, BLACK	33476-1988	A										P							6				12	13	14		
KEY B, LT. GRAY	33476-1986		B									P									10	11	12	13	14	15	
KEY B, LT. GRAY	33476-1985		B									P							6	7							
KEY A W/ CPA, BLACK	33476-1984	A										P		CPA			4			7							
KEY A, BLACK	33476-1980	A										P										11		13	14	15	
KEY A, BLACK	33476-1979	A										P				3	4		6	7	10	11		13	14	15	
KEY A W/ CPA, BLACK	33476-1976	A										P		CPA				5			10		12				
KEY A W/ CPA, BLACK	33476-1975	A										P		CPA	2		4						12				
KEY A W/ CPA, BLACK	33476-1974	A										P		CPA									12				
KEY A, BLACK	33476-1973	A										P											12	13	14	15	
KEY A, BLACK	33476-1972	A										P												13	14	15	
KEY A, BLACK	33476-1971	A										P				3	4			7	10	11		13	14	15	
KEY A, BLACK	33476-1970	A										P			2					7	10	11		13		15	
KEY A W/ CPA, BLACK	33476-1969	A										P		CPA	2	3	4	5					12	13	14	15	PLANNED OBSOLESCENCE SEE DRAWING SD-34985-8002 FOR REPLACEMENT P/N'S 34985-XXXX
KEY A W/ CPA, BLACK	33476-1968	A										P		CPA	2	3	4	5				11	12	13	14	15	
KEY A W/ CPA, BLACK	33476-1967	A										P		CPA	2	3	4	5	6	7		11	12	13	14	15	
KEY A W/ CPA, BLACK	33476-1966	A										P		CPA	2			5	6	7	10			13	14	15	
KEY A W/ CPA, BLACK	33476-1965	A										P		CPA				5	6	7				13	14	15	
KEY A W/ CPA, BLACK	33476-1964	A										P		CPA					6	7		11					
KEY A W/ CPA, BLACK	33476-1963	A										P		CPA	2	3					10						
KEY A W/ CPA, BLACK	33476-1962	A										P		CPA		3					10						
KEY A W/ CPA, BLACK	33476-1961	A										P		CPA					6	7							
KEY A W/ CPA, BLACK	33476-1960	A										P		CPA								11					
KEY A, BLACK	33476-1957	A										P							6				12	13	14	15	
KEY A, BLACK	33476-1956	A										P							6					13	14	15	
KEY B, LT. GRAY	33476-1952		B									P						5			10	11	12	13	14	15	
KEY B, LT. GRAY	33476-1951		B									P						5	6	7							
KEY B, LT. GRAY	33476-1950		B									P				3	4	5	6	7							
KEY B, LT. GRAY	33476-1949		B									P				3	4	5			10	11	12	13	14	15	
KEY A, BLACK	33476-1947	A										P							6						14	15	
KEY A, BLACK	33476-1946	A										P							6				12		14	15	
KEY A, BLACK	33476-1944	A										P			2					7	10	11	12			15	
KEY A, BLACK	33476-1943	A										P			2			5	6	7		11	12	13		15	
KEY A, BLACK	33476-1942	A										P			2				6	7		11	12	13		15	
KEY A, BLACK	33476-1941	A										P				3			6			11	12	13	14	15	
KEY A, BLACK	33476-1940	A										P												13	14		
KEY A W/ CPA, BLACK	33476-1939	A										P		CPA	2	3	4	5	6	7			12	13	14	15	
KEY A W/ CPA, BLACK	33476-1938	A										P		CPA	2	3	4	5	6	7	10	11	12	13	14	15	
KEY A, BLACK	33476-1937	A										P							6			11		13	14		
KEY A, BLACK	33476-1936	A										P							6					13			
KEY A, BLACK	33476-1934	A										P			2	3			6	7		11		13			
KEY A, BLACK	33476-1933	A										P			2	3	4	5	6		10	11	12		14	15	
KEY B, LT. GRAY	33476-1932		B									P							6		10	11	12	13	14		
KEY A, BLACK	33476-1931	A										P				3			6					13		15	
KEY A, BLACK	33476-1930	A										P				3			6		10			13			
KEY A, BLACK	33476-1929	A										P				3	4	5	6	7							
KEY A, BLACK	33476-1928	A										P							6	7							
KEY A, BLACK	33476-1927	A										P									10	11	12	13	14	15	
KEY A, BLACK	33476-1926	A										P						5			10	11	12	13	14	15	
KEY A, BLACK	33476-1925	A										P				3	4	5			10	11	12	13	14	15	
KEY A, BLACK	33476-1924	A										P						5	6	7							
KEY A, BLACK	33476-1918	A										P			2		4									15	
KEY A, BLACK	33476-1916	A										P											12	13	14		

BLOCKED TERMINAL (columns 2–15)

CAVITY WITH A NUMBER INDICATES BLOCKED TERMINAL POSITION
CAVITY WITHOUT A NUMBER INDICATES OPEN TERMINAL POSITION

DESCRIPTION	COLOR	MATERIAL
GROMMET CAP	BLACK	SPS/NYLON GF20
MAT SEAL	LIGHT BLUE	INHERENTLY LUBRICATED SILICONE
RING SEAL	GREEN	INHERENTLY LUBRICATED SILICONE
CPA	BRIGHT RED	PBT GF30
SHORTING BAR PLR	NATURAL	PBT GF15
STANDARD PLR	NATURAL	SPS/NYLON GF20
HOUSING KEYING OPTION C	DARK GRAY	SPS/NYLON GF20
HOUSING KEYING OPTION A	YELLOW	SPS/NYLON GF20
HOUSING KEYING OPTION H	YELLOW	SPS/NYLON GF20
HOUSING KEYING OPTION G	BROWN	SPS/NYLON GF20
HOUSING KEYING OPTION F	LIGHT GRAY	SPS/NYLON GF20
HOUSING KEYING OPTION E	BLACK	SPS/NYLON GF20
HOUSING KEYING OPTION D	GREEN	SPS/NYLON GF20
HOUSING KEYING OPTION C	BROWN	SPS/NYLON GF20
HOUSING KEYING OPTION B	LIGHT GRAY	SPS/NYLON GF20
HOUSING KEYING OPTION A	BLACK	SPS/NYLON GF20

BOM/APPLICABLE COMPONENTS TABLE

TABLE LEGEND

ABREVIATION	COMPONENT
A	HOUSING KEY A
B	HOUSING KEY B
C	HOUSING KEY C
D	HOUSING KEY D
E	HOUSING KEY E
F	HOUSING KEY F
G	HOUSING KEY G
H	HOUSING KEY H
GC	GROMMET CAP
M	MAT SEAL
P	PLR, STANDARD
PS	PLR, SHRT BAR LIFTER
R	RING SEAL
CPA	CPA

ENTER DESCRIPTION
EC NO: UAU2016-0550
DRWN:APROFFITT 2015/10/21
CH'KD:KBORUSZEWSKI 2015/10/21
APPR:VKOSHY 2015/10/29
BX
REV | DESCRIPTION

QUALITY SYMBOLS	GENERAL TOLERANCES (UNLESS SPECIFIED)	mm	INCH
∇ FA =0	4 PLACES	± ---	± ---
∇ FC =0	3 PLACES	± ---	± ---
∇ FP =0	2 PLACES	± 0.1	± ---
	1 PLACE	± 0.3	± ---
	0 PLACE	±	±

ANGULAR ± 3 °
DRAFT WHERE APPLICABLE MUST REMAIN WITHIN DIMENSIONS

DIMENSION STYLE: MM ONLY
SCALE:
DESIGN UNITS: METRIC
THIRD ANGLE PROJECTION
DRAWN BY: KCUNNINGHAM DATE: 2011/10/27
CHECKED BY: DATE:
APPROVED BY: DATE:
TITLE: MX150 16 WAY HYBRID RECPT SEALED ASSEMBLY
molex
MATERIAL NO.: SEE BOM
DOCUMENT NO.: SD-33476-161
SHEET NO.: 5 OF 8
SIZE: E

THIS DRAWING CONTAINS INFORMATION THAT IS PROPRIETARY TO MOLEX INCORPORATED AND SHOULD NOT BE USED WITHOUT WRITTEN PERMISSION

BOM SHEET 3

ASSEMBLY DESCRIPTION	ASSEMBLY PART NUMBER	A	B	C	D	E	F	G	H	A	C	P	PS	CPA	2	3	4	5	6	7	10	11	12	13	14	15	STATUS
KEY A, BLACK	33476-2110	A										P			2				6			11					
KEY A, BLACK	33476-2107	A										P			2	3	4		6		10	11	12	13	14		
KEY A, BLACK	33476-2106	A										P				3	4				10	11	12				
KEY A, BLACK	33476-2102	A										P							6			11		13			
KEY A, BLACK	33476-2101	A										P			2	3			6			11		13			
KEY A, BLACK	33476-2100	A										P							6	7		11		13			
KEY A, BLACK	33476-2099	A										P				3	4		6		10	11	12	13	14	15	
KEY A, BLACK	33476-2098	A										P				3	4	5		7	10	11	12		14	15	
KEY A, BLACK	33476-2097	A										P			2									13	14	15	
KEY A, BLACK	33476-2096	A										P													14	15	
KEY A, BLACK	33476-2095	A										P							6	7				13	14	15	
KEY A, BLACK	33476-2094	A										P				3			6	7		11			14	15	
KEY A, BLACK	33476-2093	A										P					4	5					12		14	15	
KEY A, BLACK	33476-2092	A										P				3			6			11			14	15	
KEY A, BLACK	33476-2091	A										P			2	3	4			7	10	11	12	13	14	15	
KEY A, BLACK	33476-2090	A										P			2	3	4		6		10	11	12	13			
KEY A W/ CPA, BLACK	33476-2089	A										P		CPA	2	3		5		7	10	11	12	13	14	15	
KEY A, BLACK	33476-2088	A										P			2	3	4	5	6	7	10	11		13	14	15	
KEY A, BLACK	33476-2087	A										P			2	3	4	5	6	7	10	11	12		14	15	
KEY A, BLACK	33476-2086	A										P			2			5			10	11		13		15	
KEY A, BLACK	33476-2085	A										P			2			5				11		13		15	
KEY A, BLACK	33476-2084	A										P			2			5				11	12	13		15	
KEY A, BLACK	33476-2083	A										P						5	6	7	10	11	12	13	14	15	
KEY A, BLACK	33476-2082	A										P			2				6				12	13	14	15	
KEY A W/ CPA, BLACK	33476-2081	A										P		CPA	2		4						12	13			
KEY A W/ CPA, BLACK	33476-2080	A										P		CPA	2		4	5			10		12	13			
KEY A, BLACK	33476-2079	A										P				3	4				10	11		13	14	15	
KEY A, BLACK	33476-2078	A										P				3	4	5		7						15	
KEY A, BLACK	33476-2077	A										P			2		4							13		15	
KEY A, BLACK	33476-2076	A										P			2				6			11			14	15	
KEY A, BLACK	33476-2075	A										P							6	7	10	11			14		
KEY A W/ CPA, BLACK	33476-2074	A										P		CPA		3	4	5	6		10	11		13			
KEY A, BLACK	33476-2073	A										P				3						11				15	
KEY A, BLACK	33476-2069	A										P					4	5					12			15	
KEY A, BLACK	33476-2068	A										P					4	5					12				
KEY A, BLACK	33476-2067	A										P			2							11			14	15	
KEY A W/ CPA, BLACK	33476-2063	A										P		CPA			4	5	6	7	10	11	12	13	14		PLANNED OBSOLESCENCE
KEY A W/ CPA, BLACK	33476-2062	A										P		CPA		3	4	5	6	7	10	11	12	13	14		SEE DRAWING SD-34985-8002
KEY A, BLACK	33476-2061	A										P													14		FOR REPLACEMENT P/N'S
KEY A, BLACK	33476-2060	A										P					4	5							14	15	34985-XXXX
KEY A, BLACK	33476-2054	A										P														15	
KEY A, BLACK	33476-2053	A										P				3			6			11				15	
KEY A, BLACK	33476-2052	A										P			2		4					11		13	14		
KEY B, LT. GRAY	33476-2051		B									P						5	6	7	10	11	12	13	14	15	
KEY A, BLACK	33476-2049	A										P							6		10	11			14		
KEY A, BLACK	33476-2048	A										P					4	5							14		
KEY A, BLACK	33476-2047	A										P			2					7	10	11	12	13			
KEY A, BLACK	33476-2046	A										P					4							13			
KEY A, BLACK	33476-2044	A										P					4							13		15	
KEY A, BLACK	33476-2043	A										P				3	4							13		15	
KEY A, BLACK	33476-2042	A										P						5								15	
KEY A, BLACK	33476-2041	A										P			2		4	5			10		12		14	15	
KEY A, BLACK	33476-2040	A										P					4					11		13	14		
KEY A W/ CPA, BLACK	33476-2039	A										P		CPA				5	6						14	15	
KEY A W/ CPA, BLACK	33476-2038	A										P		CPA	2			5	6		10				14	15	
KEY A, BLACK	33476-2036	A										P			2					7	10	11	12	13	14	15	
KEY A, BLACK	33476-2035	A										P			2			5	6		10	11	12	13		15	
KEY A, BLACK	33476-2033	A										P							6	7	10	11	12	13	14	15	
KEY A, BLACK	33476-2032	A										P					4	5						13			
KEY A W/ CPA, BLACK	33476-2031	A										P		CPA		3											
KEY A, BLACK	33476-2030	A										P			2	3											
KEY A, BLACK	33476-2028	A										P			2				6	7	10	11	12	13	14	15	
KEY A, BLACK	33476-2027	A										P			2	3	4		6	7	10	11	12	13	14	15	
KEY A, BLACK	33476-2026	A										P			2		4		6		10		12	13			
KEY A, BLACK	33476-2025	A										P				3					10	11		13	14	15	
KEY A, BLACK	33476-2024	A										P				3	4		6	7	10	11	12	13	14	15	
KEY A, BLACK	33476-2023	A										P			2	3	4	5	6		10	11	12	13	14	15	
KEY A, BLACK	33476-2022	A										P				3	4			7	10	11	12	13	14	15	
KEY A, BLACK	33476-2021	A										P				3	4			7	10	11			14		
KEY A, BLACK	33476-2020	A										P					4	5	6	7	10	11	12	13	14		
KEY A, BLACK	33476-2019	A										P				3	4	5	6	7	10	11	12	13	14		
KEY A W/ CPA, BLACK	33476-2018	A										P		CPA							10	11	12	13			
KEY A W/ CPA, BLACK	33476-2017	A										P		CPA	2						10	11					
KEY A W/ CPA, BLACK	33476-2016	A										P		CPA	2						10	11	12	13			
KEY A W/ CPA, BLACK	33476-2015	A										P		CPA	2						10	11	12	13	14		

BLOCKED TERMINAL

CAVITY WITH A NUMBER INDICATES BLOCKED TERMINAL POSITION
CAVITY WITHOUT A NUMBER INDICATES OPEN TERMINAL POSITION

DESCRIPTION	COLOR	MATERIAL
GROMMET CAP	BLACK	SPS/NYLON GF20
MAT SEAL	LIGHT BLUE	INHERENTLY LUBRICATED SILICONE
RING SEAL	GREEN	INHERENTLY LUBRICATED SILICONE
CPA	BRIGHT RED	PBT GF30
SHORTING BAR PLR	NATURAL	PBT GF15
STANDARD PLR	NATURAL	SPS/NYLON GF20
HOUSING KEYING OPTION C	DARK GRAY	SPS/NYLON GF20
HOUSING KEYING OPTION A	YELLOW	SPS/NYLON GF20
HOUSING KEYING OPTION H	YELLOW	SPS/NYLON GF20
HOUSING KEYING OPTION G	BROWN	SPS/NYLON GF20
HOUSING KEYING OPTION F	LIGHT GRAY	SPS/NYLON GF20
HOUSING KEYING OPTION E	BLACK	SPS/NYLON GF20
HOUSING KEYING OPTION D	GREEN	SPS/NYLON GF20
HOUSING KEYING OPTION C	BROWN	SPS/NYLON GF20
HOUSING KEYING OPTION B	LIGHT GRAY	SPS/NYLON GF20
HOUSING KEYING OPTION A	BLACK	SPS/NYLON GF20

BOM/APPLICABLE COMPONENTS TABLE

TABLE LEGEND	
ABREVIATION	COMPONENT
A	HOUSING KEY A
B	HOUSING KEY B
C	HOUSING KEY C
D	HOUSING KEY D
E	HOUSING KEY E
F	HOUSING KEY F
G	HOUSING KEY G
H	HOUSING KEY H
GC	GROMMET CAP
M	MAT SEAL
P	PLR, STANDARD
PS	PLR, SHRT BAR LIFTER
R	RING SEAL
CPA	CPA

ENTER DESCRIPTION
EC NO: UAU2016-0550
DRWN:APROFFITT 2015/10/21
CHKD:KBORUSZENSKI 2015/10/21
APPR:VKOSHY 2015/10/23
DESCRIPTION
REV
BX

QUALITY SYMBOLS
=0
=0
=0

GENERAL TOLERANCES (UNLESS SPECIFIED)

	mm	INCH
4 PLACES	±---	±---
3 PLACES	±---	±---
2 PLACES	±0.1	±---
1 PLACE	±0.3	±---
0 PLACE	±	±
ANGULAR	± 3 °	

DRAFT WHERE APPLICABLE MUST REMAIN WITHIN DIMENSIONS

DIMENSION STYLE: MM ONLY
SCALE
DESIGN UNITS: METRIC
THIRD ANGLE PROJECTION
DRAWN BY: KCUNNINGHAM DATE: 2011/10/27
CHECKED BY DATE
APPROVED BY DATE
MATERIAL NO.: SEE BOM
SIZE: E

TITLE: MX150 16 WAY HYBRID RECPT SEALED ASSEMBLY

molex

DOCUMENT NO.: SD-33476-161
SHEET NO.: 6 OF 8

THIS DRAWING CONTAINS INFORMATION THAT IS PROPRIETARY TO MOLEX INCORPORATED AND SHOULD NOT BE USED WITHOUT WRITTEN PERMISSION

ASSEMBLY DESCRIPTION	ASSEMBLY PART NUMBER	A	B	C	D	E	F	G	H	A	C	D	P	PS	CPA												STATUS
KEY A W/ CPA, BLACK	33476-4015	A											P		CPA					6	7	10			13		
KEY A W/ CPA, BLACK	33476-4014	A											P		CPA				5	6	7	10	11				
KEY B W/ CPA, LT.GRAY	33476-4013		B										P		CPA	2	3	4	5	6	7						15
KEY A W/ CPA, BLACK	33476-4012	A											P		CPA	2	3	4	5	6	7						15
KEY A, BLACK	33476-4011	A											P			2			5	6		10	11	12	13	14	15
KEY A W/ CPA, BLACK	33476-4010	A											P		CPA	2			5			10				14	
KEY A W/ CPA, BLACK	33476-4009	A											P		CPA				5								
KEY A, BLACK	33476-4008	A											P						5								
KEY B , LT. GRAY	33476-4007		B										P					4			7						
KEY B , LT. GRAY	33476-4006		B										P			2	3			6	7						
KEY A, BLACK	33476-4005	A											P				3	4	5			10	11				
KEY C W/ CPA, DK.GRAY	33476-4004										C		P		CPA		3					10	11	12	13	14	
KEY A W/ CPA, BLACK	33476-4003	A											P		CPA		3					10	11	12	13	14	
KEY A, BLACK	33476-4002	A											P			2	3		5	6	7	10			13	14	15
KEY A, BLACK	33476-4001	A											P						5	6	7	10	11	12	13		
KEY A, BLACK	33476-4000	A											P									10	11			14	15
KEY A, BLACK	33476-2200	A											P									10					
KEY A, BLACK	33476-2199	A											P			2			5	6		10	11				
KEY A, BLACK	33476-2198	A											P									10				14	15
KEY A, BLACK	33476-2197	A											P			2			5	6		10	11			14	15
KEY A, BLACK	33476-2196	A											P				3					10					
KEY B W/ CPA, LT.GRAY	33476-2195		B										P		CPA								11		13		
KEY B W/ CPA, LT.GRAY	33476-2194		B										P		CPA	2	3						11	12	13	14	15
KEY B W/ CPA, LT.GRAY	33476-2193		B										P		CPA	2	3									14	15
KEY A W/ CPA, YELLOW	33476-2192									A			P		CPA	2	3										15
KEY A W/ CPA, YELLOW	33476-2191									A			P		CPA	2										14	15
KEY A, BLACK	33476-2190	A											P										11				
KEY A W/ CPA, BLACK	33476-2189	A											P		CPA				5	6	7	10	11	12	13		
KEY A W/ CPA, BLACK	33476-2188	A											P		CPA	2	3		5	6	7	10			13	14	15
KEY B , LT. GRAY	33476-2187		B										P					4		6					13		
KEY A, BLACK	33476-2186	A											P			2	3	4		6		10	11	12		14	15
KEY A, BLACK	33476-2185	A											P							6			11				15
KEY D W/ CPA,STONE GRAY	33476-2184											D	P		CPA												
KEY A W/ CPA, BLACK	33476-2183	A											P		CPA	2				6		10					
KEY B W/ CPA, LT.GRAY	33476-2182		B										P		CPA	2	3										
KEY B W/ CPA, LT.GRAY	33476-2181		B										P		CPA	2	3			6	7	10	11	12	13		
KEY B W/ CPA, LT.GRAY	33476-2180		B										P		CPA	2	3						11	12	13		
KEY B W/ CPA, LT.GRAY	33476-2179		B										P		CPA		3					10					
KEY A, BLACK	33476-2178	A											P				3		5				12				
KEY B W/ CPA, LT.GRAY	33476-2177		B										P		CPA		3					10	11	12	13	14	
KEY A W/ CPA, BLACK	33476-2176	A											P		CPA						7			12	13	14	15
KEY B W/ CPA, LT.GRAY	33476-2175		B										P		CPA										13		
KEY A W/ CPA, BLACK	33476-2174	A											P		CPA	2		4	5		7			12	13		
KEY A W/ CPA, BLACK	33476-2173	A											P		CPA					6	7			12			
KEY B , LT. GRAY	33476-2172		B										P				3					10					
KEY C, DK. GRAY	33476-2171										C		P				3	4		6	7	10	11		13		15
KEY C W/ CPA, DK.GRAY	33476-2170										C		P		CPA		3	4		6	7	10	11		13		15
KEY B W/ CPA, LT. GRAY	33476-2169		B										P		CPA	2	3					10					
KEY A, BLACK	33476-2168	A											P		CPA										13		
KEY A, BLACK	33476-2167	A											P		CPA	2	3					10	11		13		
KEY A, BLACK	33476-2166	A											P		CPA						7				13		15
KEY A, BLACK	33476-2165	A											P		CPA			4	5	6	7			12	13	14	15
KEY B , LT. GRAY	33476-2164		B										P			2	3	4	5	6	7					14	
KEY B W/ CPA, LT. GRAY	33476-2163		B										P		CPA	2	3	4	5	6	7					14	
KEY A, BLACK	33476-2162	A											P		CPA												15
KEY A, YELLOW	33476-2161									A			P		CPA												
KEY C W/ CPA, DK.GRAY	33476-2160										C		P		CPA												
KEY A, BLACK	33476-2159	A											P			2					7		11			14	15
KEY A, BLACK	33476-2158	A											P			2	3	4	5								
KEY D, STONE GRAY	33476-2157											D	P														
KEY A, BLACK	33476-2156	A											P			2		4				10	11				
KEY A, BLACK	33476-2155	A											P			2		4				10					
KEY A W/ CPA, BLACK	33476-2154	A											P		CPA	2	3	4	5	6		10	11	12		14	15
KEY A, BLACK	33476-2153	A											P							6		10	11	12		14	15
KEY A, BLACK	33476-2152	A											P			2	3	4	5		7						
KEY A, BLACK	33476-2151	A											P				3			6		10	11	12		14	15
KEY A W/ CPA, BLACK	33476-2150	A											P		CPA												
KEY A, BLACK	33476-2149	A											P				3		5			10	11				
KEY A W/ CPA, BLACK	33476-2148	A											P		CPA					6		10	11	12		14	15
KEY A W/ CPA, BLACK	33476-2147	A											P		CPA	2	3	4	5		7						
KEY A W/ CPA, BLACK	33476-2146	A											P		CPA		3			6		10	11	12		14	15
KEY B, LT. GRAY	33476-2145		B										P			2	3	4	5	6	7	10	11	12	13	14	15
KEY A W/ CPA, BLACK	33476-2144	A											P		CPA	2	3	4				10	11	12			
KEY A, BLACK	33476-2143	A											P									10	11				
KEY A, BLACK	33476-2142	A											P									10	11		13	14	15
KEY A, BLACK	33476-2140	A											P			2	3	4				10	11	12	13		15
KEY A, BLACK	33476-2138	A											P			2			5			10					
KEY A, BLACK	33476-2132	A											P				3		5			10	11	12			
KEY A, BLACK	33476-2131	A											P			2		4	5			10	11	12	13	14	15
KEY A, BLACK	33476-2126	A											P			2				6	7		11	12	13	14	
KEY A, BLACK	33476-2125	A											P			2		4	5						13	14	15
KEY C, DK. GRAY	33476-2121										C		P														
KEY A, BLACK	33476-2120	A											P					4									
KEY A, BLACK	33476-2119	A											P								7				13		15
KEY A, BLACK	33476-2118	A											P			2	3				7	10	11		13		15
KEY A, BLACK	33476-2117	A											P					4	5	6	7			12	13	14	15
KEY A, BLACK	33476-2116	A											P			2	3					10	11		13		
KEY A, BLACK	33476-2115	A											P												13		
KEY A, BLACK	33476-2113	A											P				3	4	5	6	7	10	11	12	13	14	15
KEY A, BLACK	33476-2112	A											P			2	3	4		6		10	11	12	13	14	15
KEY A W/ CPA, BLACK	33476-2111	A											P		CPA	2	3	4		6		10	11	12	13	14	

PLANNED OBSOLESCENCE
SEE DRAWING SD-34985-8002
FOR REPLACEMENT P/N'S
34985-XXXX

BLOCKED TERMINAL
CAVITY WITH A NUMBER INDICATES BLOCKED TERMINAL POSITION
CAVITY WITHOUT A NUMBER INDICATES OPEN TERMINAL POSITION

DESCRIPTION	COLOR	MATERIAL
GROMMET CAP	BLACK	SPS/NYLON GF20
MAT SEAL	LIGHT BLUE	INHERENTLY LUBRICATED SILICONE
RING SEAL	GREEN	INHERENTLY LUBRICATED SILICONE
CPA	BRIGHT RED	PBT GF30
SHORTING BAR PLR	NATURAL	PBT GF15
STANDARD PLR	NATURAL	SPS/NYLON GF20
HOUSING KEYING OPTION D	STONE GRAY	SPS/NYLON GF20
HOUSING KEYING OPTION C	DARK GRAY	SPS/NYLON GF20
HOUSING KEYING OPTION A	YELLOW	SPS/NYLON GF20
HOUSING KEYING OPTION H	YELLOW	SPS/NYLON GF20
HOUSING KEYING OPTION G	BROWN	SPS/NYLON GF20
HOUSING KEYING OPTION F	LIGHT GRAY	SPS/NYLON GF20
HOUSING KEYING OPTION E	BLACK	SPS/NYLON GF20
HOUSING KEYING OPTION D	GREEN	SPS/NYLON GF20
HOUSING KEYING OPTION C	BROWN	SPS/NYLON GF20
HOUSING KEYING OPTION B	LIGHT GRAY	SPS/NYLON GF20
HOUSING KEYING OPTION A	BLACK	SPS/NYLON GF20

BOM/APPLICABLE COMPONENTS TABLE

TABLE LEGEND	
ABREVIATION	COMPONENT
A	HOUSING KEY A
B	HOUSING KEY B
C	HOUSING KEY C
D	HOUSING KEY D
E	HOUSING KEY E
F	HOUSING KEY F
G	HOUSING KEY G
H	HOUSING KEY H
GC	GROMMET CAP
M	MAT SEAL
P	PLR, STANDARD
PS	PLR, SHRT BAR LIFTER
R	RING SEAL
CPA	CPA

BOM SHEET 4

ENTER DESCRIPTION
EC NO: UAU2016-0550
DRWN:APROFFITT 2015/10/21
CHKD:KBORUSZEWSKI 2015/10/21
APPR:YKOSHY 2015/10/21
DESCRIPTION
REV BX

QUALITY SYMBOLS
=0
=0
=0

GENERAL TOLERANCES (UNLESS SPECIFIED)

	mm	INCH
4 PLACES	± ---	± ---
3 PLACES	± ---	± ---
2 PLACES	± 0.1	± ---
1 PLACE	± 0.3	± ---
0 PLACE	±	±
ANGULAR	± 3 °	

DRAFT WHERE APPLICABLE MUST REMAIN WITHIN DIMENSIONS

DIMENSION STYLE: MM ONLY
SCALE
DESIGN UNITS: METRIC
THIRD ANGLE PROJECTION
DRAWN BY: KCUNNINGHAM DATE: 2011/10/27
CHECKED BY DATE
APPROVED BY DATE
MATERIAL NO.: SEE BOM
SIZE: E

TITLE: MX150 16 WAY HYBRID RECPT SEALED ASSEMBLY

molex

DOCUMENT NO.: SD-33476-161
SHEET NO.: 7 OF 8

THIS DRAWING CONTAINS INFORMATION THAT IS PROPRIETARY TO MOLEX INCORPORATED AND SHOULD NOT BE USED WITHOUT WRITTEN PERMISSION

ASSEMBLY DESCRIPTION	ASSEMBLY PART NUMBER	A	B	C	D	E	F	G	H	A	C	D	P	PS	CPA	2	3	4	5	6	7	10	11	12	13	14	15	STATUS
KEY A , BLACK	33476-4046	A											P			2						10	11	12				PLANNED OBSOLESCENCE SEE DRAWING SD-34985-8002 FOR REPLACEMENT P/N'S 34985-XXXX
KEY A , BLACK	33476-4045	A											P			2							11	12				
KEY A , BLACK	33476-4044	A											P		CPA					6	7	10	11	12	13	14	15	
KEY A , BLACK	33476-4043	A											P		CPA					6	7						15	
KEY A , BLACK	33476-4042	A											P								7						15	
KEY A W/CPA, BLACK	33476-4041	A											P		CPA						7	10	11	12	13			
KEY A , BLACK	33476-4040	A											P				3	4		6	7			12	13	14	15	
KEY A , BLACK	33476-4039	A											P				3							12	13			
KEY A , BLACK	33476-4038	A											P			2	3					10	11	12	13			
KEY A , BLACK	33476-4037	A											P			2					7							
KEY A W/CPA, BLACK	33476-4036	A											P		CPA	2					7	10			13		15	
KEY A , BLACK	33476-4035	A											P			2	3						11			14	15	
KEY A , BLACK	33476-4034	A											P			2	3	4	5							14	15	
KEY A , BLACK	33476-4033	A											P			2		4	5	6						14		
KEY B , LT.GRAY	33476-4032		B										P			2			5	6	7							
KEY A W/CPA, BLACK	33476-4031	A											P		CPA											14	15	
KEY A , BLACK	33476-4030	A											P										11			14	15	
KEY A , BLACK	33476-4029	A											P									10		12	13	14	15	
KEY B , LT.GRAY	33476-4028		B										P			2			5	6	7		11					
KEY B , LT.GRAY	33476-4027		B										P					4	5			10	11	12	13	14	15	
KEY A , BLACK	33476-4026	A											P			2	3	4	5							14		
KEY A W/CPA, BLACK	33476-4025	A											P		CPA	2				6	7	10	11	12	13	14	15	
KEY A W/CPA, BLACK	33476-4024	A											P		CPA	2					7	10				14		
KEY A W/CPA, BLACK	33476-4023	A											P		CPA	2	3	4			7	10	11	12	13	14	15	
KEY A W/ CPA, BLACK	33476-4022	A											P		CPA				5			10	11	12	13	14		
KEY A, BLACK	33476-4021	A											P			2	3					10	11					
KEY A, BLACK	33476-4020	A											P			2	3				7	10	11				15	
KEY A, BLACK	33476-4019	A											P								7		11				15	
KEY A, BLACK	33476-4018	A											P								7	10					15	
KEY A, BLACK	33476-4017	A											P					4	5	6	7	10		12	13	14	15	
KEY C W/ CPA, DK GRAY	33476-4016										C		P		CPA		3	4		6	7	10	11		13	14	15	

BLOCKED TERMINAL

CAVITY WITH A NUMBER INDICATES BLOCKED TERMINAL POSITION
CAVITY WITHOUT A NUMBER INDICATES OPEN TERMINAL POSITION

DESCRIPTION	COLOR	MATERIAL
GROMMET CAP	BLACK	SPS/NYLON GF20
MAT SEAL	LIGHT BLUE	INHERENTLY LUBRICATED SILICONE
RING SEAL	GREEN	INHERENTLY LUBRICATED SILICONE
CPA	BRIGHT RED	PBT GF30
SHORTING BAR PLR	NATURAL	PBT GF15
STANDARD PLR	NATURAL	SPS/NYLON GF20
HOUSING KEYING OPTION D	STONE GRAY	SPS/NYLON GF20
HOUSING KEYING OPTION C	DARK GRAY	SPS/NYLON GF20
HOUSING KEYING OPTION A	YELLOW	SPS/NYLON GF20
HOUSING KEYING OPTION H	YELLOW	SPS/NYLON GF20
HOUSING KEYING OPTION G	BROWN	SPS/NYLON GF20
HOUSING KEYING OPTION F	LIGHT GRAY	SPS/NYLON GF20
HOUSING KEYING OPTION E	BLACK	SPS/NYLON GF20
HOUSING KEYING OPTION D	GREEN	SPS/NYLON GF20
HOUSING KEYING OPTION C	BROWN	SPS/NYLON GF20
HOUSING KEYING OPTION B	LIGHT GRAY	SPS/NYLON GF20
HOUSING KEYING OPTION A	BLACK	SPS/NYLON GF20

BOM/APPLICABLE COMPONENTS TABLE

TABLE LEGEND	
ABREVIATION	COMPONENT
A	HOUSING KEY A
B	HOUSING KEY B
C	HOUSING KEY C
D	HOUSING KEY D
E	HOUSING KEY E
F	HOUSING KEY F
G	HOUSING KEY G
H	HOUSING KEY H
GC	GROMMET CAP
M	MAT SEAL
P	PLR, STANDARD
PS	PLR, SHRT BAR LIFTER
R	RING SEAL
CPA	CPA

ENTER DESCRIPTION
EC NO: UAU2016-0550
DRWN:APROFFITT 2015/10/21
CHKD:KORUSZENSKI 2015/10/21
APPR:VKOSHY 2015/10/29
DESCRIPTION
REV BX

QUALITY SYMBOLS

GENERAL TOLERANCES (UNLESS SPECIFIED)

	mm	INCH
4 PLACES	± ---	± ---
3 PLACES	± ---	± ---
2 PLACES	± 0.1	± ---
1 PLACE	± 0.3	± ---
0 PLACE	±	±
ANGULAR ± 3 °		

DRAFT WHERE APPLICABLE MUST REMAIN WITHIN DIMENSIONS

DIMENSION STYLE: MM ONLY
SCALE: 2:1
DESIGN UNITS: METRIC
THIRD ANGLE PROJECTION

DRAWN BY: KCUNNINGHAM DATE: 2011/10/27
CHECKED BY DATE
APPROVED BY DATE

TITLE: MX150 16 WAY HYBRID RECPT SEALED ASSEMBLY

molex

MATERIAL NO. 9999999999
DOCUMENT NO. SD-33476-161
SHEET NO. 8 OF 8
SIZE E

THIS DRAWING CONTAINS INFORMATION THAT IS PROPRIETARY TO MOLEX INCORPORATED AND SHOULD NOT BE USED WITHOUT WRITTEN PERMISSION

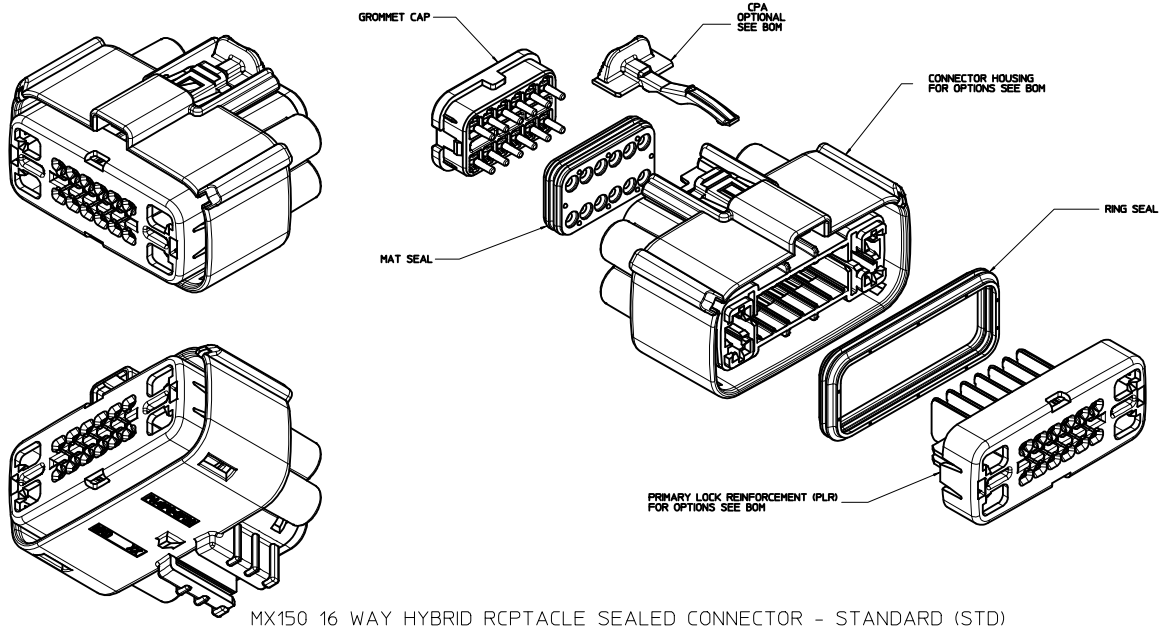

MX150 16 WAY HYBRID RCPTACLE SEALED CONNECTOR - STANDARD (STD)

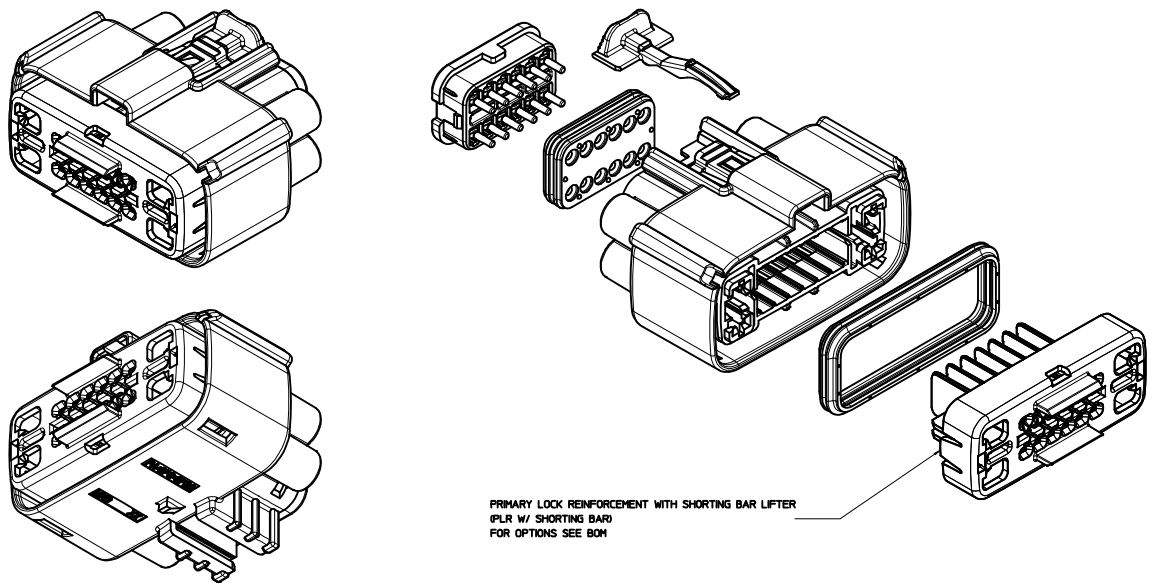

MX150 16 WAY HYBRID RCPTACLE SEALED CONNECTOR - SHORTING (SHRT) BAR

UNLESS COMPONENT NOTED, SEE STANDARD ASSEMBLY

TABLE OF CONTENTS

SHEET NO.	SHEET DESCRIPTION
1	NOTES
2	KEY CONFIGURATIONS
3	RECEPTACLE SEALED ASSEMBLY
4-6	BOM

NOTES: VALID UNLESS OTHERWISE SPECIFIED

1. GENERAL:
a. APPLICATION SPECIFICATION SEE: AS-33472-100
-CONTAINS: PRODUCT INTRODUCTION, PRODUCT SUMMARY, CONNECTOR ASSEMBLY, PACKAGING INFORMATION, CONNECTOR MATING, SERVICE INSTRUCTIONS, ELECTRICAL CONTINUITY CHECKING, CRIMPING, AND TROUBLESHOOTING.
-STANDARD (NON-SHRT) CONFIGURATIONS DESIGNED TO MATE WITH DEVICE CONNECTION AS SPECIFIED IN DRAWING EWCAP 999-S-016-2-Z02, AVAILIBLE AT http//ewcap.uscarteams.org/.
-STANDARD (NON-SHRT) CONFIGURATIONS AND SHORTING BAR CONFIGURATIONS DESIGNED TO MATE WITH BLADE HOUSING ASSEMBLY SPECIFIED IN DRAWING SD-33486-161.
-FOR 1.5mm RECEPTACLE TERMINALS TO BE USED WITH THIS ASSEMBLY. SEE MOLEX DRAWING SD-33012-002.
-1.5mm TERMINALS TO BE USED WITH WIRE WITHIN DIAMETER RANGE OF 1.4mm TO 2.69mm.
-FOR 2.8mm RECEPTACLE TERMINALS TO BE USED WITH THIS ASSEMBLY SEE TABLE.
-2.8mm TERMINALS TO BE USED WITH WIRE WITHIN DIAMETER RANGE OF 1.50mm TO 3.30mm.
-ASSEMBLY SHIPPED WITH PLR AND CPA IN PRE-LOCK POSITION (SEE SECTION Z-Z PRE-LOCK).
-IN THE EVENT THAT THE PLR IS FOUND IN THE SEATED (FINAL LOCK) POSITION, REFER TO MOLEX SPECIFICATION PS-34646-001, AVAILABLE AT www.molex.com <http://www.molex.com>
-ASSEMBLY CONFORMS TO SAE/USCAR-2 REV.4 WITH THE FOLLOWING EXCEPTIONS:
ENGAGEMENT FORCE TO MOVE CPA FROM PRE-LOCK TO FINAL LOCK POSITION WHEN UNMATED: 40N MIN.
DISENGAGEMENT FORCE TO MOVE CPA FROM FINAL LOCK TO PRE-LOCK POSITION: 3N MIN. 40N MAX.
-TERMINAL INSERTION FORCE FOR WIRE DIAMETER ABOVE 2.5mm NOT EXCEEDING 2.69mm SHALL NOT EXCEED 40 NEWTONS.
b. PRODUCT SPECIFICATION SEE: PS-33476-000
CONTAINS: PRODUCT INTRODUCTION, PRODUCT SUMMARY, RATINGS (CURRENT, TEMPERATURE, SEALING, AND FLAMMABILITY), AND PRODUCT VALIDATION.
c. PACKAGING SPECIFICATION PER MOLEX DRAWING: PK-30907-895
d. PARTS MUST BE IN COMPLIANCE TO MOLEX CHEMICAL SUBSTANCES FOR PRODUCTS SPECIFICATION: ES-40000-5016
e. DATA MUST BE SUBMITTED UNDER THE MOLEX PART NUMBER TO IMDS (COMPANY ID#13255)
f. FOR INFORMATION ON 16 WAY HYBRID RECEPT HRN ASSY WITHOUT CLIPSLOT SEE E-33476-161

2. DESIGN - MATERIALS:
a. SEE BOM TABLE

3. DESIGN - GEOMETRY:
a. THIS IS A 100% CAD GENERATED PART. THE CAD MATHEMATICAL DATA IS THE MASTER FOR THIS PART. FOR DIMENSIONAL OR ANY INFORMATION NOT SHOWN ON THIS DRAWING, ANALYZE THE CAD MODEL.
b. GEOMETRIC DIMENSIONS AND TOLERANCES PER ASME Y14.5M - 1994
c. EDGES AND UNDIMENSIONED DETAILS PER ISO13715
d. CORNERS SHOWN AS SHARP TO BE R 0.2 MAX.
e. LETTERING SHALL BE 0.15 MAX RAISED IN 0.25 MAX RECESS PAD. THIS INCLUDES RECYCLING CODE, CAVITY ID, VENDOR IDENTIFICATION, AND CUSTOMER MATERIAL NUMBER.
f. VISUAL DEFECTS SHALL MEET COSMETIC STANDARD PS-45499-002 (Class B)
g. LASER MARKING: TBD

TYCO 2.8mm CABLE SEAL TERMINAL

FORD P/N FEMALE RECEPTACLE	GRIP SIZE
IFIT-14474-KA	12
IFIT-14474-JA	14
IFIT-14474-HA	16
IFIT-14474-GA	18
IFIT-14474-FA	20
IFIT-14474-EA	22

INSPECTION NUMBER LOG
LAST NUMBER USED:
ADDED:
REMOVED:

REV	DESCRIPTION
BC	UPDATED TO PLANNED OBSOLESCENCE
BB	ADD NEW P/N 33476-2345 THRU 33476-2348
BA10	ADD NEW P/N 33476-2343 THRU 33476-2344
BA9	ADD NEW P/N 33476-2338 THRU 33476-2342
BA8	CHANGE TO PK-30907-895
BA7	ADD NEW P/N 33476-2336 THRU 33476-2337
BA6	ADD NEW P/N 33476-2333 THRU 33476-2335
BA5	ADD NEW P/N 33476-2332
BA4	ADD NEW P/N 33476-2327 THRU 2331
BA3	ADD NEW P/N 33476-2314 THRU 2326
BA2	ADD NEW P/N 33476-2313
BA1	ADD NEW P/N 33476-2312
BA	ADD NEW P/N 33476-2310 33476-2311
AZ10	ADD NEW P/N 33476-2308 33476-2309
AZ9	ADD NEW P/N 33476-2305 33476-2306 33476-2307
AZ8	ADD NEW P/N 33476-2304
AZ7	ADD NEW P/N 33476-2303
AZ6	ADD NEW P/N 33476-2301 33476-2302
AZ5	ADD NEW P/N 33476-2295 33476-2300
AZ4	ADD NEW P/N 33476-2294
AZ3	ADD NEW P/N 33476-2292 33476-2293
AZ2	ADD NEW P/N 33476-2285 33476-2286 33476-2287 33476-2288 33476-2289 33476-2290 33476-2291
AZ1	ADD NEW P/N 33476-2283 33476-2284
AZ	ADD NEW P/N 33476-2279 33476-2280
AY17	ADD NEW P/N 33476-2278
AY16	ADD NEW P/N 33476-2275 33476-2276 33476-2277
AY15	ADD NEW P/N 33476-2273 33476-2274
AY14	ADD NEW P/N 33476-2265 33476-2266 33476-2267 33476-2268 33476-2269 33476-2270 33476-2271 33476-2272
AY13	ADD NEW P/N 33476-2263 33476-2264
AY12	ADD NEW P/N 33476-2262
AY11	ADD NEW P/N 33476-2261
AY10	ADD NEW P/N 33476-2260
AY9	ADD NEW P/N 33476-2257 33476-2258 33476-2259
AY8	UPDATED 2.8MM WIRE SIZE
AY7	UPDATED WIRE SIZE
AY6	ADD NEW P/N 33476-2255 33476-2256
AY5	ADD NEW P/N 33476-2254
AY4	ADD NEW P/N 33476-2253
REV	DESCRIPTION

ENTER DESCRIPTION
EC NO: UAU2016-0550 2015/10/21
DRWN:APROFFITT 2015/10/21
CHKD:KBORUSZEWSKI 2015/10/21
APPR:VKOSHY 2015/10/29
BC

QUALITY SYMBOLS: =0 =0 =0

GENERAL TOLERANCES (UNLESS SPECIFIED)

	mm	INCH
4 PLACES	± ---	± ---
3 PLACES	± ---	± ---
2 PLACES	± 0.10	± ---
1 PLACE	± 0.3	± ---
0 PLACE	±	±
ANGULAR	± 3 °	

DRAFT WHERE APPLICABLE MUST REMAIN WITHIN DIMENSIONS

DIMENSION STYLE: MM ONLY
SCALE: 3:1
DESIGN UNITS: METRIC
THIRD ANGLE PROJECTION

DRAWN BY: KCUNNINGHAM DATE: 2011/10/26
CHECKED BY DATE
APPROVED BY DATE
MATERIAL NO.: SEE BOM
SIZE: E

TITLE: MX150 16 WAY HYBRID RECPT SEALED ASSEMBLY CLIPSLOT

molex

DOCUMENT NO.: SD-33476-181
SHEET NO.: 1 OF 7

THIS DRAWING CONTAINS INFORMATION THAT IS PROPRIETARY TO MOLEX INCORPORATED AND SHOULD NOT BE USED WITHOUT WRITTEN PERMISSION

KEY CONFIGURATIONS

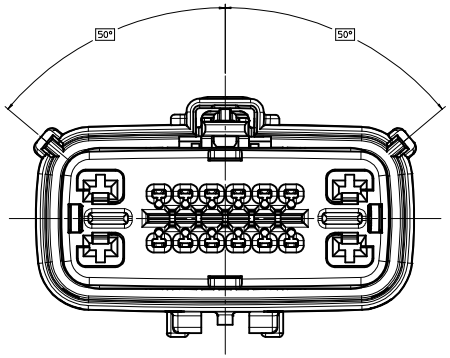

KEY A

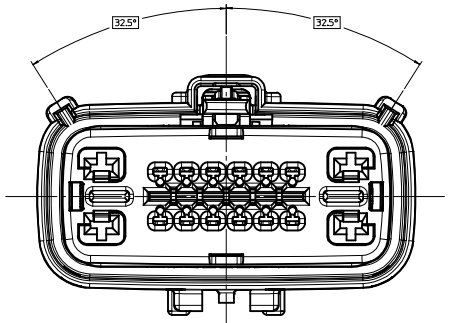

KEY E

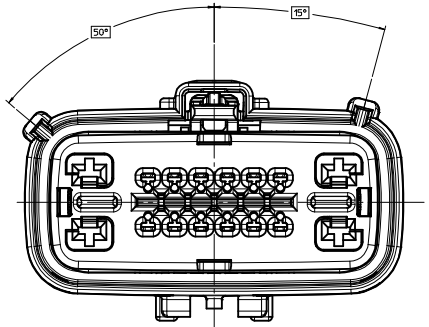

KEY B

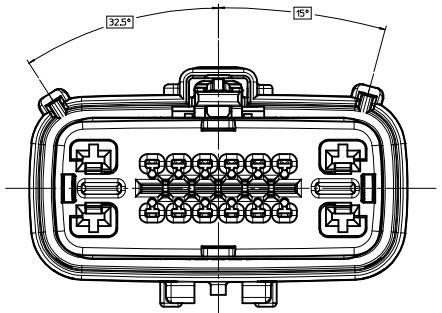

KEY F

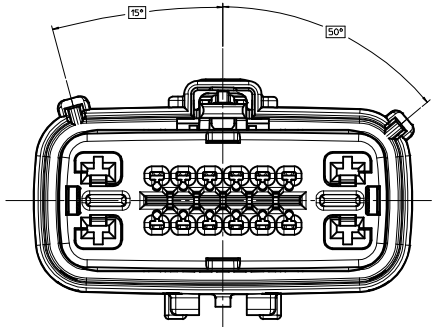

KEY C

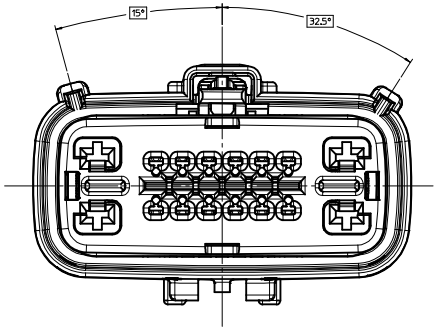

KEY G

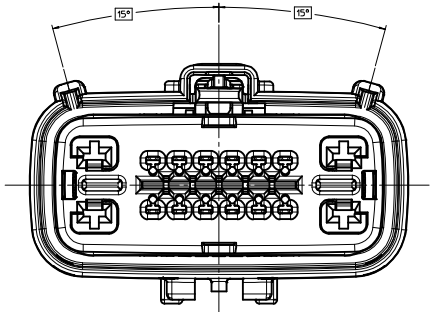

KEY D

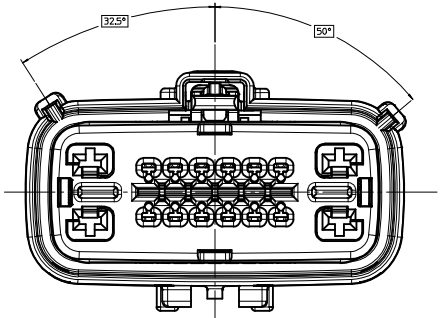

KEY H

ENTER DESCRIPTION EC NO: UAU2016-0550 DRWN:APROFFITT 2015/10/21 CHKD:KBORUSZEWSKI 2015/10/21 APPR:VKOSHY 2015/10/29 DESCRIPTION BC REV	QUALITY SYMBOLS =0 =0 =0	GENERAL TOLERANCES (UNLESS SPECIFIED) mm / INCH 4 PLACES ± --- / ± --- 3 PLACES ± --- / ± --- 2 PLACES ± 0.10 / ± --- 1 PLACE ± 0.3 / ± --- 0 PLACE ± / ± ANGULAR ± 3 ° DRAFT WHERE APPLICABLE MUST REMAIN WITHIN DIMENSIONS	DIMENSION STYLE MM ONLY DRAWN BY KCUNNINGHAM DATE 2011/10/26 CHECKED BY DATE APPROVED BY DATE MATERIAL NO. SEE BOM SIZE E	SCALE 4:1 DESIGN UNITS METRIC THIRD ANGLE PROJECTION TITLE MX150 16 WAY HYBRID RECPT SEALED ASSEMBLY CLIPSLOT molex DOCUMENT NO. SD-33476-181 SHEET NO. 2 OF 7 THIS DRAWING CONTAINS INFORMATION THAT IS PROPRIETARY TO MOLEX INCORPORATED AND SHOULD NOT BE USED WITHOUT WRITTEN PERMISSION	

RECEPTACLE SEALED ASSEMBLY

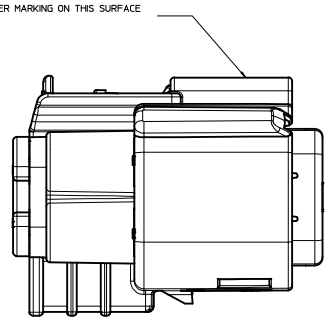

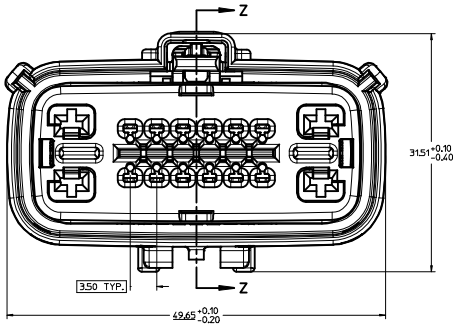

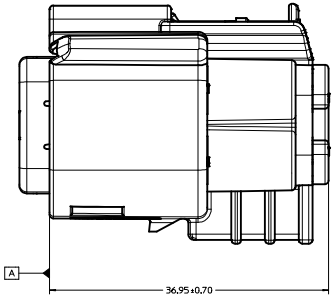

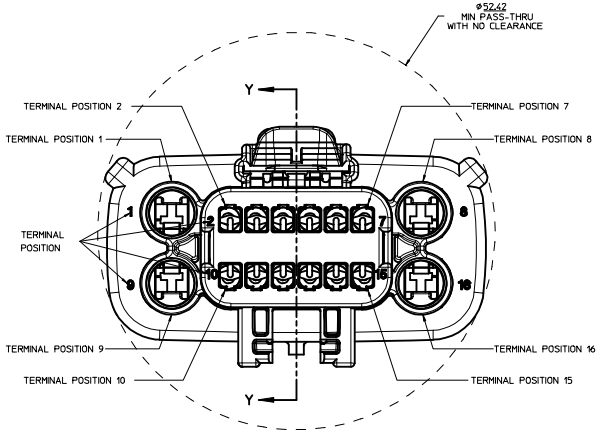

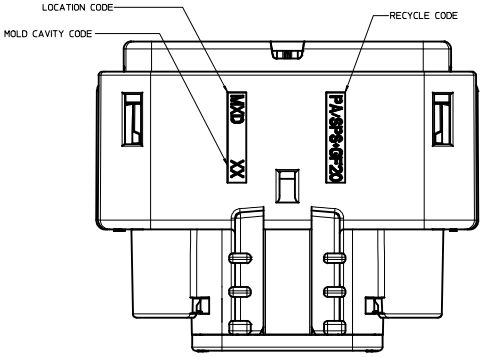

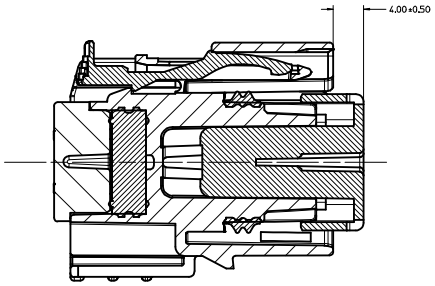

PRIMARY LOCK REINFORCEMENT (PLR) SHOWN
IN PRE-STAGED POSITION
SECTION Z-Z

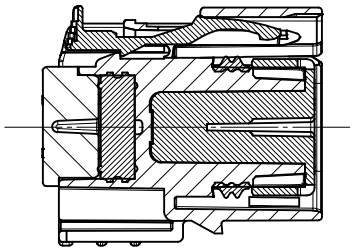

PRIMARY LOCK REINFORCMENT (PLR) SHOWN
IN FINAL-LOCK POSITION
SECTION Y-Y

ENTER DESCRIPTION EC NO: UAU2016-0550 DRWN:APROFFITT 2015/10/21 CHKD:KBORUSZENSKI 2015/10/21 APPR:VKOSHY 2015/10/29 DESCRIPTION REV BC	QUALITY SYMBOLS =0 =0 =0	GENERAL TOLERANCES (UNLESS SPECIFIED) mm / INCH 4 PLACES ± --- / ± --- 3 PLACES ± --- / ± --- 2 PLACES ± 0.10 / ± --- 1 PLACE ± 0.3 / ± --- 0 PLACE ± / ± ANGULAR ± 3 ° DRAFT WHERE APPLICABLE MUST REMAIN WITHIN DIMENSIONS	DIMENSION STYLE MM ONLY DRAWN BY KCUNNINGHAM DATE 2011/10/26 CHECKED BY DATE APPROVED BY DATE MATERIAL NO. SEE BOM	SCALE 4:1 DESIGN UNITS METRIC THIRD ANGLE PROJECTION TITLE MX150 16 WAY HYBRID RECPT SEALED ASSEMBLY CLIPSLOT molex DOCUMENT NO. SD-33476-181 SHEET NO. 3 OF 7 SIZE E	THIS DRAWING CONTAINS INFORMATION THAT IS PROPRIETARY TO MOLEX INCORPORATED AND SHOULD NOT BE USED WITHOUT WRITTEN PERMISSION	

BOM SHEET 1

ASSEMBLY DESCRIPTION	ASSEMBLY PART NUMBER	A	B	C	D	E	F	G	H	A	P	PS	CPA	2	3	4	5	6	7	10	11	12	13	14	15	STATUS
KEY A, BLACK	33476-2070	A									P								7	10	11	12		14		
KEY A, BLACK	33476-2066	A									P				3	4	5		7	10	11		13	14	15	
KEY A, BLACK	33476-2065	A									P			2				6	7			12	13	14	15	
KEY A, BLACK	33476-2064	A									P							6	7			12	13	14	15	
KEY A, BLACK	33476-2059	A									P			2					7		11	12	13			
KEY A, BLACK	33476-2058	A									P							6	7	10	11	12	13	14	15	
KEY A, BLACK	33476-2057	A									P									10	11			14		
KEY A, BLACK	33476-2056	A									P				3	4		6	7	10	11	12	13		15	
KEY A, BLACK	33476-2055	A									P				3	4		6		10	11	12	13		15	
KEY A, BLACK	33476-2050	A									P											12	13	14	15	
KEY A, BLACK	33476-2045	A									P			2	3			6			11					
KEY A, BLACK	33476-2037	A									P												13	14	15	
KEY A, BLACK	33476-2034	A									P				3	4			7	10	11	12	13	14	15	
KEY A, BLACK	33476-2029	A									P			2	3	4		6	7	10	11	12	13	14	15	
KEY A, BLACK	33476-2013	A									P			2	3	4			7					14		
KEY A W/ CPA, BLACK	33476-1998	A									P		CPA					6	7				13			
KEY A, BLACK	33476-1990	A									P			2						10	11	12	13	14	15	
KEY A, BLACK	33476-1987	A									P							6						14	15	
KEY F W/ SHRT, BAR, LT, GRAY	33476-1983						F					PS														
KEY E W/ SHRT, BAR, BLACK	33476-1982					E						PS		2	3			6	7	10	11			14	15	
KEY A, BLACK	33476-1981	A									P							6				12				
KEY A, BLACK	33476-1978	A									P				3					10			13	14	15	
KEY A, BLACK	33476-1977	A									P				3					10	11		13	14	15	
KEY A, BLACK	33476-1959	A									P						5	6					13	14	15	
KEY A, BLACK	33476-1958	A									P			2				6				12				
KEY H W/ SHRT, BAR AND CPA, YELLOW	33476-1955								H			PS	CPA													
KEY A, BLACK	33476-1954	A									P				3	4			7					14		
KEY A, BLACK	33476-1953	A									P			2				6		10	11	12	13	14	15	
KEY A, BLACK	33476-1948	A									P			2					7					14		
KEY A, BLACK	33476-1945	A									P				3					10	11					
KEY A, BLACK	33476-1935	A									P			2					7				13	14	15	
KEY A, BLACK	33476-1923	A									P				3	4		6	7	10	11	12	13	14	15	
KEY A, BLACK	33476-1922	A									P			2								12				
KEY A, BLACK	33476-1921	A									P										11	12	13			
KEY A, BLACK	33476-1920	A									P						5	6			11				15	
KEY A, BLACK	33476-1919	A									P							6								
KEY A, BLACK	33476-1917	A									P			2					7				13		15	PLANNED OBSOLESCENCE
KEY A, BLACK	33476-1914	A									P				3					10						SEE DRAWING SD-34985-8002
KEY A, BLACK	33476-1913	A									P			2	3				7	10	11	12		14	15	FOR REPLACEMENT P/N'S
KEY A, BLACK	33476-1912	A									P			2	3					10	11			14	15	34985-XXXX
KEY A, BLACK	33476-1911	A									P			2							11					
KEY A, BLACK	33476-1910	A									P			2					7		11	12				
KEY A, BLACK	33476-1909	A									P			2	3						11	12		14		
KEY H W/ SHRT, BAR, YELLOW	33476-1900								H			PS						6		10	11			14		
KEY H W/ SHRT, BAR, YELLOW	33476-1899								H			PS						6	7	10	11			14		
KEY F W/ SHRT, BAR, LT, GRAY	33476-1898						F					PS						6		10	11	12	13	14		
KEY F W/ SHRT, BAR, LT, GRAY	33476-1897						F					PS						6	7	10	11	12	13	14		
KEY H W/ SHRT, BAR, YELLOW	33476-1896								H			PS												14		
KEY H W/ SHRT, BAR, YELLOW	33476-1895								H			PS														
KEY F W/ SHRT, BAR, LT, GREY	33476-1894						F					PS										12	13	14		
KEY E W/ SHRT, BAR, BLACK	33476-1893					E						PS								10	11			14	15	
KEY E W/ SHRT, BAR, BLACK	33476-1892					E						PS		2	3									14	15	
KEY A, BLACK	33476-1891	A									P			2	3			6								
KEY A, BLACK	33476-1881	A									P							6	7				13			
KEY E W/ SHRT, BAR, BLACK	33476-1878					E						PS												14		
KEY E W/ SHRT, BAR, BLACK	33476-1877					E						PS												14	15	
KEY E W/ SHRT, BAR, BLACK	33476-1876					E						PS						6	7	10	11			14		
KEY E W/ SHRT, BAR, BLACK	33476-1875					E						PS								10	11			14		
KEY E W/ SHRT, BAR, BLACK	33476-1862					E						PS		2											15	
KEY A, BLACK	33476-1861	A									P			2	3	4					11	12		14		
KEY F W/ SHRT, BAR, LT, GRAY	33476-1860						F					PS		2	3	4	5	6		10						
KEY F W/ SHRT, BAR, LT, GRAY	33476-1859						F					PS								10						
KEY F W/ SHRT, BAR, LT, GRAY	33476-1858						F					PS		2	3			6		10						
KEY F W/ SHRT, BAR, LT, GRAY	33476-1857						F					PS						6			11	12				
KEY F W/ SHRT, BAR, LT, GRAY	33476-1856						F					PS						6				12				
KEY F W/ SHRT, BAR, LT, GRAY	33476-1855						F					PS		2				6		10	11	12				
KEY F W/ SHRT, BAR, LT, GRAY	33476-1854						F					PS						6					13			
KEY F W/ SHRT, BAR, LT, GRAY	33476-1853						F					PS		2	3			6					13			
KEY F W/ SHRT, BAR, LT, GRAY	33476-1852						F					PS						6								
KEY F W/ SHRT, BAR, LT, GRAY	33476-1851						F					PS		2	3			6	7				13	14	15	
KEY A, BLACK	33476-1850	A									P			2					7	10				14		
KEY A W/ CPA, BLACK	33476-1849	A									P		CPA													
KEY A W/ CPA, BLACK	33476-1848	A									P		CPA	2												
KEY A, BLACK	33476-1841	A									P															
KEY E W/ SHRT, BAR, BLACK	33476-1713					E						PS														

BLOCKED TERMINAL

CAVITY WITH A NUMBER INDICATES BLOCKED TERMINAL POSITION
CAVITY WITHOUT A NUMBER INDICATES OPEN TERMINAL POSITION

DESCRIPTION	COLOR	MATERIAL
GROMMET CAP	BLACK	SPS/NYLON GF20
MAT SEAL	LIGHT BLUE	INHERENTLY LUBRICATED SILICONE
RING SEAL	GREEN	INHERENTLY LUBRICATED SILICONE
CPA	BRIGHT RED	PBT GF30
PLR SHRT, BAR LIFFTER	NATURAL	PBT GF15
PLR STANDARD	NATURAL	SPS/NYLON GF20
HOUSING KEYING OPTION A	YELLOW	SPS/NYLON GF20
HOUSING KEYING OPTION H	YELLOW	SPS/NYLON GF20
HOUSING KEYING OPTION G	BROWN	SPS/NYLON GF20
HOUSING KEYING OPTION F	LIGHT GRAY	SPS/NYLON GF20
HOUSING KEYING OPTION E	BLACK	SPS/NYLON GF20
HOUSING KEYING OPTION D	GREEN	SPS/NYLON GF20
HOUSING KEYING OPTION C	BROWN	SPS/NYLON GF20
HOUSING KEYING OPTION B	LIGHT GRAY	SPS/NYLON GF20
HOUSING KEYING OPTION A	BLACK	SPS/NYLON GF20

BOM/APPLICABLE COMPONENTS TABLE

LEGEND TABLE	
ABREVIATION	COMPONENT
A	HOUSING KEY A
B	HOUSING KEY B
C	HOUSING KEY C
D	HOUSING KEY D
E	HOUSING KEY E
F	HOUSING KEY F
G	HOUSING KEY G
H	HOUSING KEY H
GC	GROMMET CAP
M	MAT SEAL
P	PLR, STANDARD
PS	PLR, SHRT BAR LIFTER
R	RING SEAL
CPA	CPA

ENTER DESCRIPTION
EC NO: UAU2016-0550
DRWN:APROFFITT 2015/10/21
CHKD:KBORUSZENSKI 2015/10/21
APPR:VKOSHY 2015/10/21
DESCRIPTION
REV
BC

QUALITY SYMBOLS
▽ =0
▽ =0
▽ =0

GENERAL TOLERANCES (UNLESS SPECIFIED)

	mm	INCH
4 PLACES	± ---	± ---
3 PLACES	± ---	± ---
2 PLACES	± 0.10	± ---
1 PLACE	± 0.3	± ---
0 PLACE	±	±

ANGULAR ± 3 °
DRAFT WHERE APPLICABLE MUST REMAIN WITHIN DIMENSIONS

DIMENSION STYLE: MM ONLY
SCALE
DESIGN UNITS: METRIC
THIRD ANGLE PROJECTION

DRAWN BY: KCUNNINGHAM DATE: 2011/10/26
CHECKED BY DATE
APPROVED BY DATE

TITLE: MX150 16 WAY HYBRID RECPT SEALED ASSEMBLY CLIPSLOT

molex

MATERIAL NO.: SEE BOM
DOCUMENT NO.: SD-33476-181
SHEET NO.: 4 OF 7
SIZE: E

THIS DRAWING CONTAINS INFORMATION THAT IS PROPRIETARY TO MOLEX INCORPORATED AND SHOULD NOT BE USED WITHOUT WRITTEN PERMISSION

BOM SHEET 2

ASSEMBLY DESCRIPTION	ASSEMBLY PART NUMBER	A	B	C	D	E	F	G	H	A	P	PS	CPA	2	3	4	5	6	7	10	11	12	13	14	15	STATUS
KEY A, BLACK	33476-2253	A									P										11			14		
KEY A, BLACK	33476-2252	A									P										11		13	14		
KEY A, BLACK	33476-2251	A									P			2	3	4	5									
KEY A, BLACK	33476-2250	A									P						5	6	7	10	11	12	13			
KEY A, BLACK	33476-2249	A									P						5	6				12	13			
KEY A, BLACK	33476-2248	A									P			2			5	6				12	13	14		
KEY A, BLACK	33476-2247	A									P				3	4	5				11	12		14	15	
KEY A, BLACK	33476-2246	A									P								7		11		13	14		
KEY A, BLACK	33476-2245	A									P								7		11					
KEY A, BLACK	33476-2244	A									P			2				6	7	10	11					
KEY A, BLACK	33476-2243	A									P			2			5	6		10	11					
KEY A, BLACK	33476-2242	A									P						5			10	11				15	
KEY A, BLACK	33476-2241	A									P			2								12	13	14		
KEY A, BLACK	33476-2240	A									P			2	3		5	6	7		11	12	13		15	
KEY A, BLACK	33476-2239	A									P			2	3		5	6			11	12	13	14	15	
KEY A, BLACK	33476-2238	A									P			2	3		5	6			11	12	13		15	
KEY A, BLACK	33476-2237	A									P			2	3		5	6	7		11	12	13		15	
KEY A, BLACK	33476-2236	A									P									10					15	
KEY A, BLACK	33476-2235	A									P				3	4			7	10	11					
KEY A, BLACK	33476-2234	A									P				3		5	6	7				13	14	15	
KEY A, BLACK	33476-2233	A									P			2	3		5	6	7		11				15	
KEY A, BLACK	33476-2232	A									P			2		4	5	6	7	10	11	12		14	15	
KEY A, BLACK	33476-2231	A									P			2	3		5	6	7	10	11	12	13	14	15	
KEY A, BLACK	33476-2230	A									P			2	3	4	5	6	7	10	11	12	13		15	
KEY A, BLACK	33476-2229	A									P			2					7	10						
KEY A, BLACK	33476-2228	A									P						5									
KEY A, BLACK	33476-2227	A									P				3				7	10	11					
KEY A, BLACK	33476-2226	A									P				3		5	6	7						15	
KEY A, BLACK	33476-2225	A									P				3		5	6	7	10	11				15	
KEY A, BLACK	33476-2224	A									P			2								12	13	14		
KEY A, BLACK	33476-2223	A									P			2	3		5	6	7		11	12	13	14	15	
KEY A, BLACK	33476-2222	A									P			2	3	4	5	6	7		11	12	13	14	15	
KEY A, BLACK	33476-2221	A									P			2		4	5			10	11	12	13	14	15	
KEY A, BLACK	33476-2220	A									P									10	11	12	13	14	15	
KEY A, BLACK	33476-2219	A									P				3		5	6	7				13	14	15	
KEY A, BLACK	33476-2218	A									P			2	3		5	6	7		11			14	15	PLANNED OBSOLESCENCE
KEY A, BLACK	33476-2217	A									P			2	3	4	5	6	7		11			14	15	SEE DRAWING SD-34985-8002
KEY A, BLACK	33476-2216	A									P				3	4			7	10	11	12	13	14	15	FOR REPLACEMENT P/N'S
KEY F W/ SHRT. BAR, LT. GRAY	33476-2215						F					PS		2	3	4	5	6	7	10	11	12	13	14	15	34985-XXXX
KEY A, BLACK	33476-2214	A									P			2	3		5	6	7	10	11	12	13	14	15	
KEY A, BLACK	33476-2213	A									P				3		5	6	7	10	11	12	13	14	15	
KEY A, BLACK	33476-2212	A									P				3	4		6	7				13	14	15	
KEY F W/ SHRT. BAR, LT. GRAY	33476-2211						F					PS		2	3	4	5	6		10						
KEY F W/ SHRT. BAR, LT. GRAY	33476-2210						F					PS						6								
KEY F W/ SHRT. BAR, LT. GRAY	33476-2209						F					PS		2	3			6		10						
KEY F W/ SHRT. BAR, LT. GRAY	33476-2208						F					PS						6			11	12				
KEY F W/ SHRT. BAR, LT. GRAY	33476-2207						F					PS						6				12				
KEY F W/ SHRT. BAR, LT. GRAY	33476-2206						F					PS		2				6		10	11	12				
KEY F W/ SHRT. BAR, LT. GRAY	33476-2205						F					PS						6				12				
KEY F W/ SHRT. BAR, LT. GRAY	33476-2204						F					PS		2	3			6					13			
KEY F W/ SHRT. BAR, LT. GRAY	33476-2203						F					PS						6								
KEY F W/ SHRT. BAR, LT. GRAY	33476-2202						F					PS		2	3			6	7				13	14	15	
KEY E W/ SHRT. BAR, BLACK	33476-2201					E						PS														
KEY B, LT. GRAY	33476-2141		B								P					4		6					13			
KEY A, BLACK	33476-2139	A									P			2	3	4	5	6	7	10	11	12	13	14	15	
KEY A, BLACK	33476-2137	A									P			2	3		5	6			11				15	
KEY F W/ SHRT. BAR, LT. GRAY	33476-2136						F					PS						6	7					14	15	
KEY F W/ SHRT. BAR, LT. GRAY	33476-2135						F					PS		2	3			6	7					14	15	
KEY F W/ SHRT. BAR, LT. GRAY	33476-2134						F					PS				4	5	6	7	10	11	12	13	14	15	
KEY A, YELLOW	33476-2133									A	P			2											15	
KEY A, BLACK	33476-2130	A									P			2				6	7	10	11	12	13	14	15	
KEY H W/ SHRT. BAR & CPA, YELLOW	33476-2129								H			PS	CPA	2											15	
KEY A, BLACK	33476-2128	A									P			2	3		5	6			11			14	15	
KEY H W/ CPA, YELLOW	33476-2127								H		P		CPA	2	3										15	
KEY A, BLACK	33476-2124	A									P					4				10				14	15	
KEY A, BLACK	33476-2123	A									P			2	3		5	6		10	11	12	13	14	15	
KEY A, BLACK	33476-2122	A									P					4								14	15	
KEY A, BLACK	33476-2114	A									P				3	4	5		7	10	11	12	13	14	15	
KEY A, BLACK	33476-2109	A									P			2								12	13	14	15	
KEY A, BLACK	33476-2108	A									P			2	3	4			7	10	11	12	13	14	15	
KEY A, BLACK	33476-2105	A									P			2			5	6				12	13	14	15	
KEY B, LT. GRAY	33476-2104		B								P					4							13			
KEY B, LT. GRAY	33476-2103		B								P					4										
KEY B, LT. GRAY	33476-2072		B								P			2	3	4	5	6	7	10	11	12	13	14	15	
KEY B, LT. GRAY	33476-2071		B								P															

BLOCKED TERMINAL

CAVITY WITH A NUMBER INDICATES BLOCKED TERMINAL POSITION
CAVITY WITHOUT A NUMBER INDICATES OPEN TERMINAL POSITION

BOM/APPLICABLE COMPONENTS TABLE		
GROMMET CAP	BLACK	SPS/NYLON GF20
MAT SEAL	LIGHT BLUE	INHERENTLY LUBRICATED SILICONE
RING SEAL	GREEN	INHERENTLY LUBRICATED SILICONE
CPA	BRIGHT RED	PBT GF30
PLR SHRT. BAR LIFFTER	NATURAL	PBT GF15
PLR STANDARD	NATURAL	SPS/NYLON GF20
HOUSING KEYING OPTION A	YELLOW	SPS/NYLON GF20
HOUSING KEYING OPTION H	YELLOW	SPS/NYLON GF20
HOUSING KEYING OPTION G	BROWN	SPS/NYLON GF20
HOUSING KEYING OPTION F	LIGHT GRAY	SPS/NYLON GF20
HOUSING KEYING OPTION E	BLACK	SPS/NYLON GF20
HOUSING KEYING OPTION D	GREEN	SPS/NYLON GF20
HOUSING KEYING OPTION C	BROWN	SPS/NYLON GF20
HOUSING KEYING OPTION B	LIGHT GRAY	SPS/NYLON GF20
HOUSING KEYING OPTION A	BLACK	SPS/NYLON GF20
DESCRIPTION	COLOR	MATERIAL

LEGEND TABLE	
ABREVIATION	COMPONENT
A	HOUSING KEY A
B	HOUSING KEY B
C	HOUSING KEY C
D	HOUSING KEY D
E	HOUSING KEY E
F	HOUSING KEY F
G	HOUSING KEY G
H	HOUSING KEY H
GC	GROMMET CAP
M	MAT SEAL
P	PLR, STANDARD
PS	PLR, SHRT BAR LIFTER
R	RING SEAL
CPA	CPA

ENTER DESCRIPTION
EC NO: UAU2016-0550
DRWN:APROFFITT 2015/10/21
CHKD:KBORUSZENSKI 2015/10/21
APPR:VKOSHY 2015/10/29
DESCRIPTION
BC
REV

QUALITY SYMBOLS
=0
=0
=0

GENERAL TOLERANCES (UNLESS SPECIFIED)

	mm	INCH
4 PLACES	± ---	± ---
3 PLACES	± ---	± ---
2 PLACES	± 0.10	± ---
1 PLACE	± 0.3	± ---
0 PLACE	±	±

ANGULAR ± 3 °

DRAFT WHERE APPLICABLE MUST REMAIN WITHIN DIMENSIONS

DIMENSION STYLE: MM ONLY
SCALE
DESIGN UNITS: METRIC
THIRD ANGLE PROJECTION

DRAWN BY: KCUNNINGHAM DATE: 2011/10/26
CHECKED BY DATE
APPROVED BY DATE

TITLE: MX150 16 WAY HYBRID RECPT SEALED ASSEMBLY CLIPSLOT

molex

MATERIAL NO.: SEE BOM
DOCUMENT NO.: SD-33476-181
SHEET NO.: 5 OF 7
SIZE: E

THIS DRAWING CONTAINS INFORMATION THAT IS PROPRIETARY TO MOLEX INCORPORATED AND SHOULD NOT BE USED WITHOUT WRITTEN PERMISSION

tb_frame_E_P_AM_T
Rev. G 2012/01/11

BOM SHEET 3

ASSEMBLY DESCRIPTION	ASSEMBLY PART NUMBER	A	B	C	D	E	F	G	H	A	P	PS	CPA	2	3	4	5	6	7	10	11	12	13	14	15	STATUS
KEY A, BLACK	33476-2335	A									P												13			
KEY A, BLACK	33476-2334	A									P			2						10	11		13	14		
KEY A, BLACK	33476-2333	A									P			2			5	6		10	11		13	14		
KEY A, BLACK	33476-2332	A									P				3	4	5	6	7	10	11		13	14	15	
KEY H W/ SHRT. BAR AND CPA, YELLOW	33476-2331								H		P		CPA		3			6	7						15	
KEY H W/ SHRT. BAR AND CPA, YELLOW	33476-2330								H		P		CPA	2						10						
KEY B, W/ CPA, LT.GRAY	33476-2329		B								P		CPA													
KEY A, YELLOW	33476-2328									A	P															
KEY A, W/ CPA ,YELLOW	33476-2327									A	P		CPA													
KEY A, BLACK	33476-2326	A									P			2			5	6		10	11			14	15	
KEY A, BLACK	33476-2325	A									P									10				14	15	
KEY A, BLACK	33476-2324	A									P									10	11			14	15	
KEY A, BLACK	33476-2323	A									P									10	11					
KEY A, BLACK	33476-2322	A									P									10						
KEY B, LT.GRAY	33476-2321		B								P			2			5	6	7		11						
KEY B, LT.GRAY	33476-2320		B								P					4	5			10	11	12	13	14	15	
KEY A, BLACK	33476-2319	A									P			2	3					10	11	12				
KEY A, BLACK	33476-2318	A									P			2	3				7	10	11	12				
KEY A, BLACK	33476-2317	A									P			2		4		6				12	13			
KEY A, BLACK	33476-2316	A									P			2				6				12	13			
KEY A, BLACK	33476-2315	A									P			2	3	4	5		7							
KEY A, BLACK	33476-2314	A									P							6	7	10	11				15	
KEY A, BLACK	33476-2313	A									P				3	4	5			10	11	12				
KEY A, BLACK	33476-2312	A									P				3			6	7		11				15	
KEY H W/ SHRT. BAR AND CPA, YELLOW	33476-2311								H			PS	CPA	2	3			6	7	10	11	12	13	14	15	
KEY H W/ SHRT. BAR AND CPA, YELLOW	33476-2310								H			PS	CPA	2	3			6	7	10	11	12	13			
KEY A, BLACK	33476-2309	A									P			2										14		
KEY A, BLACK	33476-2308	A									P								7							
KEY F, LIGHT GRAY	33476-2307						F					PS		2	3			6	7	10				14	15	
KEY F, LIGHT GRAY	33476-2306						F					PS						6	7	10				14	15	
KEY A, BLACK	33476-2305	A									P				3				7	10	11	12	13	14	15	
KEY B, W/ CPA, LT. GRAY	33476-2304		B								P		CPA	2	3						11	12	13	14	15	
KEY B, W/ CPA, LT. GRAY	33476-2303		B								P		CPA	2	3									14	15	
KEY A, BLACK	33476-2302	A									P				3			6	7						15	
KEY A, BLACK	33476-2301	A									P			2		4		6		10		12	13			
KEY A, W/ CPA, YELLOW	33476-2300									A	P		CPA	2										14	15	
KEY A, W/ CPA, YELLOW	33476-2295									A	P		CPA	2	3										15	
KEY A, W/ CPA, YELLOW	33476-2294									A	P		CPA	2								12			15	
KEY A, BLACK	33476-2293	A									P				3	4	5			10	11	12	13	14	15	
KEY A, BLACK	33476-2292	A									P			2	3					10	11	12	13			
KEY A, BLACK	33476-2291	A									P				3		5			10						
KEY A, BLACK	33476-2290	A									P				3	4	5	6		10	11	12	13			
KEY A, BLACK	33476-2289	A									P			2	3	4	5	6								
KEY A, BLACK	33476-2288	A									P			2						10	11		13			
KEY A, BLACK	33476-2287	A									P			2												
KEY A, BLACK	33476-2286	A									P						5	6	7	10	11				15	
KEY A, BLACK	33476-2285	A									P								7	10	11					
KEY A, BLACK	33476-2284	A									P				3			6	7	10	11				15	
KEY A, BLACK	33476-2283	A									P				3			6			11				15	
KEY A, BLACK	33476-2280	A									P			2			5	6	7	10	11					
KEY A, BLACK	33476-2279	A									P									10	11	12	13			
KEY A, BLACK	33476-2278	A									P										11		13	14	15	
KEY F, LIGHT GRAY	33476-2277						F				P							6	7	10	11			14	15	
KEY F, LIGHT GRAY	33476-2276						F				P							6	7	10	11				15	
KEY F, LIGHT GRAY	33476-2275						F				P									10	11				15	
KEY A, BLACK	33476-2274	A									P			2	3									14		
KEY A, BLACK	33476-2273	A									P			2	3				7		11	12				
KEY A, BLACK	33476-2272	A									P								7	10	11	12	13			
KEY A, BLACK	33476-2271	A									P									10		12	13			
KEY A, BLACK	33476-2270	A									P								7						15	
KEY A, BLACK	33476-2269	A									P								7			12	13	14	15	
KEY A, BLACK	33476-2268	A									P				3				7	10	11				15	
KEY A, BLACK	33476-2267	A									P			2	3	4	5				11		13			
KEY A, BLACK	33476-2266	A									P			2						10	11	12	13			
KEY A, BLACK	33476-2265	A									P			2							11		13			
KEY A, BLACK	33476-2264	A									P			2				6			11					
KEY B, LT. GRAY	33476-2263		B								P					4		6					13			
KEY A, BLACK	33476-2262	A									P										11					
KEY A, BLACK	33476-2261	A									P				3		5			10	11					
KEY A, BLACK	33476-2260	A									P							6				12	13	14	15	
KEY A, BLACK	33476-2259	A									P						5	6		10	11					
KEY A, BLACK	33476-2258	A									P						5	6								
KEY A, BLACK	33476-2257	A									P			2			5	6	7	10	11	12	13	14		
KEY A, BLACK	33476-2256	A									P						5			10	11					
KEY A, BLACK	33476-2255	A									P						5		7	10	11	12		14		
KEY A, BLACK	33476-2254	A									P						5	6	7	10	11	12	13			

PLANNED OBSOLESCENCE
SEE DRAWING SD-34985-8002
FOR REPLACEMENT P/N'S
34985-XXXX

BLOCKED TERMINAL

CAVITY WITH A NUMBER INDICATES BLOCKED TERMINAL POSITION
CAVITY WITHOUT A NUMBER INDICATES OPEN TERMINAL POSITION

DESCRIPTION	COLOR	MATERIAL
GROMMET CAP	BLACK	SPS/NYLON GF20
MAT SEAL	LIGHT BLUE	INHERENTLY LUBRICATED SILICONE
RING SEAL	GREEN	INHERENTLY LUBRICATED SILICONE
CPA	BRIGHT RED	PBT GF30
PLR SHRT. BAR LIFFTER	NATURAL	PBT GF15
PLR STANDARD	NATURAL	SPS/NYLON GF20
HOUSING KEYING OPTION A	YELLOW	SPS/NYLON GF20
HOUSING KEYING OPTION H	YELLOW	SPS/NYLON GF20
HOUSING KEYING OPTION G	BROWN	SPS/NYLON GF20
HOUSING KEYING OPTION F	LIGHT GRAY	SPS/NYLON GF20
HOUSING KEYING OPTION E	BLACK	SPS/NYLON GF20
HOUSING KEYING OPTION D	GREEN	SPS/NYLON GF20
HOUSING KEYING OPTION C	BROWN	SPS/NYLON GF20
HOUSING KEYING OPTION B	LIGHT GRAY	SPS/NYLON GF20
HOUSING KEYING OPTION A	BLACK	SPS/NYLON GF20

BOM/APPLICABLE COMPONENTS TABLE

LEGEND TABLE	
ABREVIATION	COMPONENT
A	HOUSING KEY A
B	HOUSING KEY B
C	HOUSING KEY C
D	HOUSING KEY D
E	HOUSING KEY E
F	HOUSING KEY F
G	HOUSING KEY G
H	HOUSING KEY H
GC	GROMMET CAP
M	MAT SEAL
P	PLR, STANDARD
PS	PLR, SHRT BAR LIFTER
R	RING SEAL
CPA	CPA

ENTER DESCRIPTION
EC NO: UAU2016-0550
DRWN:APROFFITT 2015/10/21
CHKD:KBORUSZENSKI 2015/10/21
APPR:VKOSHY 2015/10/29
DESCRIPTION
REV
BC

QUALITY SYMBOLS

GENERAL TOLERANCES (UNLESS SPECIFIED)

	mm	INCH
4 PLACES	± ---	± ---
3 PLACES	± ---	± ---
2 PLACES	± 0.10	± ---
1 PLACE	± 0.3	± ---
0 PLACE	±	±

ANGULAR ± 3 °
DRAFT WHERE APPLICABLE MUST REMAIN WITHIN DIMENSIONS

DIMENSION STYLE: MM ONLY
SCALE
DESIGN UNITS: METRIC
THIRD ANGLE PROJECTION
DRAWN BY: KCUNNINGHAM DATE: 2011/10/26
CHECKED BY DATE
APPROVED BY DATE
MATERIAL NO.: SEE BOM
SIZE: E

TITLE: MX150 16 WAY HYBRID RECPT SEALED ASSEMBLY CLIPSLOT

molex

DOCUMENT NO.: SD-33476-181
SHEET NO.: 6 OF 7

THIS DRAWING CONTAINS INFORMATION THAT IS PROPRIETARY TO MOLEX INCORPORATED AND SHOULD NOT BE USED WITHOUT WRITTEN PERMISSION

tb_frame_E_P_AM_T
Rev. G 2012/01/11

ASSEMBLY DESCRIPTION	ASSEMBLY PART NUMBER	A	B	C	D	E	F	G	H	A	P	PS	CPA	2	3	4	5	6	7	10	11	12	13	14	15	STATUS
														BLOCKED TERMINAL												
KEY A, BLACK	33476-2348	A									P			2	3	4	5					12	13	14	15	
KEY A, BLACK	33476-2347	A									P			2		4	5					12	13	14	15	
KEY A, BLACK	33476-2346	A									P								7	10	11			14		
KEY A, BLACK	33476-2345	A									P						5	6	7	10	11			14		PLANNED OBSOLESCENCE SEE DRAWING SD-34985-8002 FOR REPLACEMENT P/N'S 34985-XXXX
KEY A, BLACK	33476-2344	A									P						5		7							
KEY A, BLACK	33476-2343	A									P			2	3		5	6	7	10	11	12	13			
KEY A, BLACK	33476-2342	A									P											12	13			
KEY B, LT.GRAY	33476-2341		B								P			2	3	4	5	6		10	11	12		14	15	
KEY B, LT.GRAY	33476-2340		B								P								7	10	11	12	13	14	15	
KEY B, LT.GRAY	33476-2339		B								P					4	5	6	7							
KEY A, BLACK	33476-2338	A									P								7	10						
KEY F W/ SHRT. BAR, LT. GRAY	33476-2337						F					PS									11				15	
KEY F W/ SHRT. BAR, LT. GRAY	33476-2336						F					PS						6	7		11				15	

CAVITY WITH A NUMBER INDICATES BLOCKED TERMINAL POSITION
CAVITY WITHOUT A NUMBER INDICATES OPEN TERMINAL POSITION

DESCRIPTION	COLOR	MATERIAL
GROMMET CAP	BLACK	SPS/NYLON GF20
MAT SEAL	LIGHT BLUE	INHERENTLY LUBRICATED SILICONE
RING SEAL	GREEN	INHERENTLY LUBRICATED SILICONE
CPA	BRIGHT RED	PBT GF30
PLR SHRT. BAR LIFFTER	NATURAL	PBT GF15
PLR STANDARD	NATURAL	SPS/NYLON GF20
HOUSING KEYING OPTION A	YELLOW	SPS/NYLON GF20
HOUSING KEYING OPTION H	YELLOW	SPS/NYLON GF20
HOUSING KEYING OPTION G	BROWN	SPS/NYLON GF20
HOUSING KEYING OPTION F	LIGHT GRAY	SPS/NYLON GF20
HOUSING KEYING OPTION E	BLACK	SPS/NYLON GF20
HOUSING KEYING OPTION D	GREEN	SPS/NYLON GF20
HOUSING KEYING OPTION C	BROWN	SPS/NYLON GF20
HOUSING KEYING OPTION B	LIGHT GRAY	SPS/NYLON GF20
HOUSING KEYING OPTION A	BLACK	SPS/NYLON GF20

BOM/APPLICABLE COMPONENTS TABLE

LEGEND TABLE	
ABREVIATION	COMPONENT
A	HOUSING KEY A
B	HOUSING KEY B
C	HOUSING KEY C
D	HOUSING KEY D
E	HOUSING KEY E
F	HOUSING KEY F
G	HOUSING KEY G
H	HOUSING KEY H
GC	GROMMET CAP
M	MAT SEAL
P	PLR, STANDARD
PS	PLR, SHRT BAR LIFTER
R	RING SEAL
CPA	CPA

ENTER DESCRIPTION
EC NO: UAU2016-0550
DRWN:APROFFITT 2015/10/21
CHKD:KORUSZENSKI 2015/10/21
APPR:VKOSHY 2015/10/29
DESCRIPTION
REV BC

QUALITY SYMBOLS
=0
=0
=0
=0

GENERAL TOLERANCES (UNLESS SPECIFIED)

	mm	INCH
4 PLACES	± ---	± ---
3 PLACES	± ---	± ---
2 PLACES	± 0.10	± ---
1 PLACE	± 0.3	± ---
0 PLACE	±	±

ANGULAR ± 3 °
DRAFT WHERE APPLICABLE MUST REMAIN WITHIN DIMENSIONS

DIMENSION STYLE: MM ONLY
SCALE: 4:1
DESIGN UNITS: METRIC
THIRD ANGLE PROJECTION

DRAWN BY: KCUNNINGHAM DATE: 2011/10/26
CHECKED BY DATE
APPROVED BY DATE

TITLE: MX150 16 WAY HYBRID RECPT SEALED ASSEMBLY CLIPSLOT

molex

MATERIAL NO.: SEE BOM
DOCUMENT NO.: SD-33476-181
SHEET NO.: 7 OF 7
SIZE: E

THIS DRAWING CONTAINS INFORMATION THAT IS PROPRIETARY TO MOLEX INCORPORATED AND SHOULD NOT BE USED WITHOUT WRITTEN PERMISSION