molex

MX150 2X2 BLADE SEALED ASSEMBLY MAT SEAL
BOM AND PIN OUT SHEET

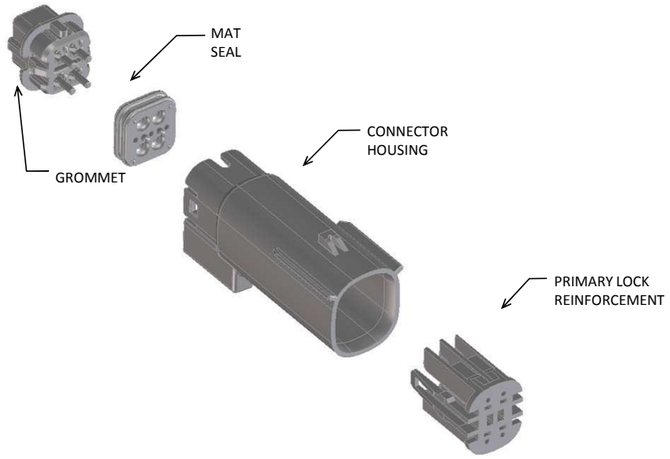

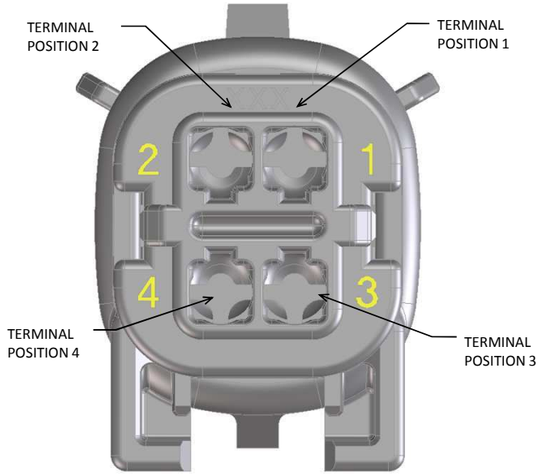

ABBREVIATION	DESCRIPTION	COLOR	MATERIAL
A-BLK	HOUSING, KEYING OPTION A	BLACK	SPS/NYLON GF20
B-LG	HOUSING, KEYING OPTION B	LIGHT GRAY	SPS/NYLON GF20
C-BR	HOUSING, KEYING OPTION C	BROWN	SPS/NYLON GF20
D-GR	HOUSING, KEYING OPTION D	GREEN	SPS/NYLON GF20
C-DG	HOUSING, KEYING OPTION C	DARK GRAY	SPS/NYLON GF20
D-SG	HOUSING, KEYING OPTION D	STONE GRAY	SPS/NYLON GF20
A-YW	HOUSING, KEYING OPTION A	YELLOW	SPS/NYLON GF20
GCP	GROMMET CAP (PLUGGED)	BLACK	SPS/NYLON GF20
GCO	GROMMET CAP (OPEN)	BLACK	SPS/NYLON GF20
PLR	PLR	NATURAL	SPS/NYLON GF20
M	MAT SEAL	ROYAL BLUE	INHERENTLY LUBRICATED SILICONE

FOR ADDITIONAL INFORMATION SEE SD-33482-0001

ASSEMBLY DESCRIPTION	ASSEMBLY PART NUMBER	COMPONENT				BLOCKED TERMINALS											STATUS	COMMENTS	OPTIONAL ATTATCHMENTS SOLD SEPERATELY	
		THE PRESENCE OF AN ABBREVIATION INDICATES THE PRESENCE OF THAT COMPONENT.				CAVITY WITH A NUMBER INDICATES BLOCKED TERMINAL POSITION CAVITY WITHOUT A NUMBER INDICATES OPEN TERMINAL POSITION														
		HOUSING KEY/COLOR	GROMMET CAP	PLR	MAT SEAL	1	2	3	4										BACKSHELL WITH RIBS	BACKSHELL WITHOUT RIBS
KEY A, BLACK	33482-4001	A-BLK	GCO	PLR	M												SALEABLE			
KEY B, LIGHT GRAY	33482-4002	B-LG	GCO	PLR	M												SALEABLE			
KEY C, BROWN	33482-4003	C-BR	GCO	PLR	M												NOT RECOMMENDED	SEE 33482-4103		
KEY D, GREEN	33482-4004	D-GR	GCO	PLR	M												NOT RECOMMENDED	SEE 33482-4104		
KEY A, BLACK	33482-4006	A-BLK	GCP	PLR	M		2										SALEABLE			
KEY B, LIGHT GRAY	33482-4007	B-LG	GCP	PLR	M		2										SALEABLE			
KEY C, BROWN	33482-4008	C-BR	GCP	PLR	M		2										NOT RECOMMENDED	SEE 33482-4105		
KEY D, GREEN	33482-4009	D-GR	GCP	PLR	M		2										NOT RECOMMENDED	SEE 33482-4106		
KEY A, BLACK	33482-4011	A-BLK	GCP	PLR	M		2	3									SALEABLE			
KEY B, LIGHT GRAY	33482-4012	B-LG	GCP	PLR	M		2	3									SALEABLE			
KEY C, BROWN	33482-4013	C-BR	GCP	PLR	M		2	3									NOT RECOMMENDED	SEE 33482-4107		
KEY D, GREEN	33482-4014	D-GR	GCP	PLR	M		2	3									NOT RECOMMENDED	SEE 33482-4108		
KEY A, BLACK	33482-4016	A-BLK	GCP	PLR	M	1	2	3	4								SALEABLE			
KEY B, LIGHT GRAY	33482-4017	B-LG	GCP	PLR	M	1	2	3	4								SALEABLE			
KEY C, BROWN	33482-4018	C-BR	GCP	PLR	M	1	2	3	4								NOT RECOMMENDED	SEE 33482-4109		
KEY D, GREEN	33482-4019	D-GR	GCP	PLR	M	1	2	3	4								NOT RECOMMENDED	SEE 33482-4110		
KEY A, BLACK	33482-4021	A-BLK	GCP	PLR	M	1	2	3									SALEABLE			
KEY A, BLACK	33482-4022	A-BLK	GCP	PLR	M				4								SALEABLE			
KEY A, BLACK	33482-4023	A-BLK	GCP	PLR	M			3	4								SALEABLE			
KEY A, BLACK	33482-4024	A-BLK	GCP	PLR	M			3									SALEABLE			
KEY A, BLACK	33482-4025	A-BLK	GCP	PLR	M	1	2										SALEABLE			
KEY C, DARK GRAY	33482-4103	C-DG	GCO	PLR	M												SALEABLE			
KEY D, STONE GRAY	33482-4104	D-SG	GCO	PLR	M												SALEABLE			
KEY C, DARK GRAY	33482-4105	C-DG	GCP	PLR	M		2										SALEABLE			
KEY D, STONE GRAY	33482-4106	D-SG	GCP	PLR	M		2										SALEABLE			
KEY C, DARK GRAY	33482-4107	C-DG	GCP	PLR	M		2	3									SALEABLE			
KEY D, STONE GRAY	33482-4108	D-SG	GCP	PLR	M		2	3									SALEABLE			
KEY C, DARK GRAY	33482-4109	C-DG	GCP	PLR	M	1	2	3	4								SALEABLE			
KEY D, STONE GRAY	33482-4110	D-SG	GCP	PLR	M	1	2	3	4								SALEABLE			
KEY A, BLACK	33482-4111	A-BLK	GCP	PLR	M		2		4								SALEABLE			
KEY A, YELLOW	33482-4112	A-YW	GCO	PLR	M												SALEABLE			
KEY B, LIGHT GRAY	33482-4113	B-LG	GCP	PLR	M	1											SALEABLE			
KEY A, BLACK	33482-4115	A-BLK	GCP	PLR	M	1		3									SALEABLE			
KEY C, DARK GRAY	33482-4116	C-DG	GCP	PLR	M		2		4								SALEABLE			
KEY B, LIGHT GRAY	33482-4117	B-LG	GCP	PLR	M		2		4								SALEABLE			

molex

MX150 2X3 BLADE SEALED ASSEMBLY MAT SEAL
BOM AND PIN OUT SHEET

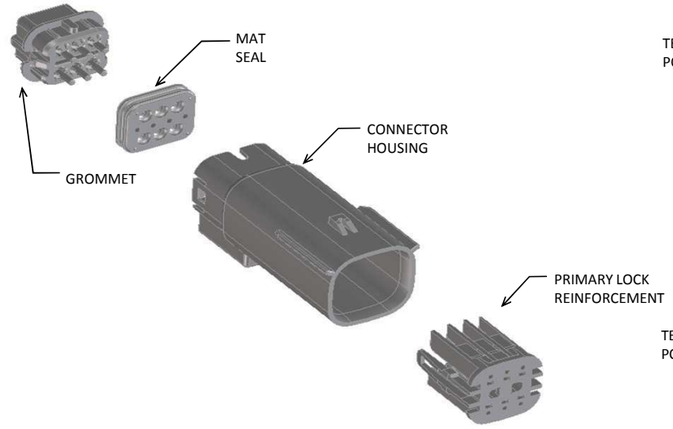

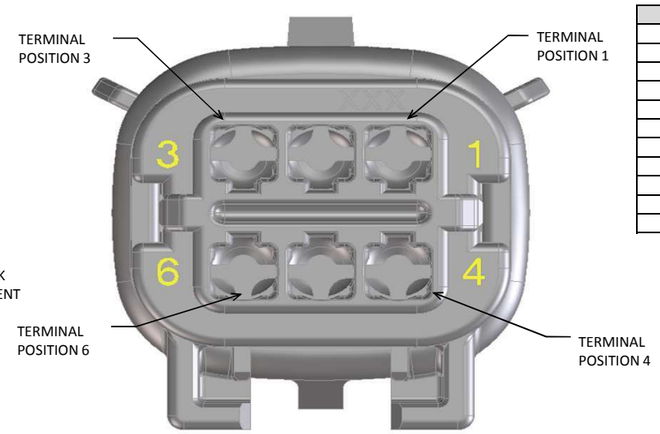

ABBREVIATION	DESCRIPTION	COLOR	MATERIAL
A-BLK	HOUSING, KEYING OPTION A	BLACK	SPS/NYLON GF20
B-LG	HOUSING, KEYING OPTION B	LIGHT GRAY	SPS/NYLON GF20
C-BR	HOUSING, KEYING OPTION C	BROWN	SPS/NYLON GF20
D-GR	HOUSING, KEYING OPTION D	GREEN	SPS/NYLON GF20
C-DG	HOUSING, KEYING OPTION C	DARK GRAY	SPS/NYLON GF20
D-SG	HOUSING, KEYING OPTION D	STONE GRAY	SPS/NYLON GF20
A-YW	HOUSING, KEYING OPTION A	YELLOW	SPS/NYLON GF20
GC	GROMMET CAP (STANDARD)	BLACK	SPS/NYLON GF20
GCL	GROMMET CAP (LENGTHENED)	BLACK	SPS/NYLON GF20
PLR	PLR	NATURAL	SPS/NYLON GF20
M	MAT SEAL	ROYAL BLUE	INHERENTLY LUBRICATED SILICONE

FOR ADDITIONAL INFORMATION SEE SD-33482-0001

ASSEMBLY DESCRIPTION	ASSEMBLY PART NUMBER	COMPONENT				BLOCKED TERMINALS											STATUS	COMMENTS	OPTIONAL ATTATCHMENTS SOLD SEPERATELY	
		THE PRESENCE OF AN ABBREVIATION INDICATES THE PRESENCE OF THAT COMPONENT.				CAVITY WITH A NUMBER INDICATES BLOCKED TERMINAL POSITION CAVITY WITHOUT A NUMBER INDICATES OPEN TERMINAL POSITION														
		HOUSING KEY/COLOR	GROMMET CAP	PLR	MAT SEAL	1	2	3	4	5	6								BACKSHELL WITH RIBS	BACKSHELL WITHOUT RIBS
KEY A, BLACK	33482-3601	A-BLK	GC	PLR	M												SALEABLE		34950-0610	34950-0620
KEY B, LIGHT GRAY	33482-3602	B-LG	GC	PLR	M												SALEABLE		34950-0610	34950-0620
KEY C, BROWN	33482-3603	C-BR	GC	PLR	M												NOT RECOMMENDED	SEE 33482-3628	34950-0610	34950-0620
KEY D, GREEN	33482-3604	D-GR	GC	PLR	M												NOT RECOMMENDED	SEE 33482-3629	34950-0610	34950-0620
VOID KEY	33482-3605																			
KEY A, BLACK	33482-3606	A-BLK	GC	PLR	M			3									SALEABLE		34950-0610	34950-0620
KEY B, LIGHT GRAY	33482-3607	B-LG	GC	PLR	M			3									SALEABLE		34950-0610	34950-0620
KEY C, BROWN	33482-3608	C-BR	GC	PLR	M			3									NOT RECOMMENDED	SEE 33482-3638	34950-0610	34950-0620
KEY D, GREEN	33482-3609	D-GR	GC	PLR	M			3									NOT RECOMMENDED	SEE 33482-3641	34950-0610	34950-0620
VOID KEY	33482-3610																			
KEY A, BLACK	33482-3611	A-BLK	GC	PLR	M			3	4								SALEABLE		34950-0610	34950-0620
KEY B, LIGHT GRAY	33482-3612	B-LG	GC	PLR	M			3	4								SALEABLE		34950-0610	34950-0620
KEY C, BROWN	33482-3613	C-BR	GC	PLR	M			3	4								NOT RECOMMENDED	SEE 33482-3642	34950-0610	34950-0620
KEY D, GREEN	33482-3614	D-GR	GC	PLR	M			3	4								NOT RECOMMENDED	SEE 33482-3643	34950-0610	34950-0620
VOID KEY	33482-3615																			
KEY A, BLACK	33482-3616	A-BLK	GC	PLR	M			3									SALEABLE		34950-0610	34950-0620
KEY A, BLACK	33482-3617	A-BLK	GC	PLR	M		2										SALEABLE		34950-0610	34950-0620
KEY A, BLACK	33482-3618	A-BLK	GC	PLR	M					5	6						SALEABLE		34950-0610	34950-0620
KEY A, BLACK	33482-3619	A-BLK	GC	PLR	M		2	3	4	5							SALEABLE		34950-0610	34950-0620
KEY A, BLACK	33482-3620	A-BLK	GC	PLR	M	1	2	3	4	5	6						SALEABLE		34950-0610	34950-0620
KEY A, BLACK	33482-3621	A-BLK	GC	PLR	M	1			4	5							SALEABLE		34950-0610	34950-0620
KEY A, BLACK	33482-3622	A-BLK	GC	PLR	M				4	5	6						SALEABLE		34950-0610	34950-0620
KEY A, BLACK	33482-3623	A-BLK	GC	PLR	M					5							SALEABLE		34950-0610	34950-0620
KEY A, BLACK	33482-3624	A-BLK	GC	PLR	M						6						SALEABLE		34950-0610	34950-0620
KEY B, LIGHT GRAY	33482-3625	B-LG	GC	PLR	M	1				5							SALEABLE		34950-0610	34950-0620
KEY A, BLACK	33482-3626	A-BLK	GC	PLR	M	1	2	3	4								SALEABLE		34950-0610	34950-0620
KEY A, BLACK	33482-3627	A-BLK	GC	PLR	M		2	3		5	6						SALEABLE		34950-0610	34950-0620
KEY C, DARK GRAY	33482-3628	C-DG	GC	PLR	M												SALEABLE		34950-0610	34950-0620
KEY D, STONE GRAY	33482-3629	D-SG	GC	PLR	M												SALEABLE		34950-0610	34950-0620
KEY A, BLACK	33482-3630	A-BLK	GC	PLR	M			3			6						SALEABLE		34950-0610	34950-0620
KEY A, BLACK	33482-3631	A-BLK	GCL	PLR	M												SALEABLE		34950-0610	34950-0620
KEY B, LIGHT GRAY	33482-3632	B-LG	GCL	PLR	M												SALEABLE		34950-0610	34950-0620
KEY C, DARK GRAY	33482-3633	C-DG	GCL	PLR	M												SALEABLE		34950-0610	34950-0620
KEY D, STONE GRAY	33482-3634	D-SG	GCL	PLR	M												SALEABLE		34950-0610	34950-0620
KEY C, DARK GRAY	33482-3635	C-DG	GCL	PLR	M			3									SALEABLE		34950-0610	34950-0620
KEY A, BLACK	33482-3636	A-BLK	GCL	PLR	M			3									SALEABLE		34950-0610	34950-0620
KEY A, BLACK	33482-3637	A-BLK	GC	PLR	M		2				6						SALEABLE		34950-0610	34950-0620
KEY C, DARK GRAY	33482-3638	C-DG	GC	PLR	M			3									SALEABLE		34950-0610	34950-0620
KEY A, BLACK	33482-3639	A-BLK	GCL	PLR	M	1	2	3	4	5	6						SALEABLE		34950-0610	34950-0620
KEY A, BLACK	33482-3640	A-BLK	GC	PLR	M				4								SALEABLE		34950-0610	34950-0620
KEY D, STONE GRAY	33482-3641	D-SG	GC	PLR	M			3									SALEABLE		34950-0610	34950-0620
KEY C, DARK GRAY	33482-3642	C-DG	GC	PLR	M			3	4								SALEABLE		34950-0610	34950-0620
KEY D, STONE GRAY	33482-3643	D-SG	GC	PLR	M			3	4								SALEABLE		34950-0610	34950-0620
KEY A, YELLOW	33482-3644	A-YW	GC	PLR	M												SALEABLE		34950-0610	34950-0620
KEY A, BLACK	33482-3645	A-BLK	GC	PLR	M			3	4	5	6						SALEABLE		34950-0610	34950-0620
KEY A, BLACK	33482-3646	A-BLK	GC	PLR	M		2	3									SALEABLE		34950-0610	34950-0620
KEY B, LIGHT GRAY	33482-3647	B-LG	GC	PLR	M		2	3									SALEABLE		34950-0610	34950-0620
KEY C, DARK GRAY	33482-3648	C-DG	GC	PLR	M						6						SALEABLE		34950-0610	34950-0620
KEY A, BLACK	33482-3649	A-BLK	GC	PLR	M				4		6						SALEABLE		34950-0610	34950-0620

molex

MX150 2X3 BLADE SEALED ASSEMBLY MAT SEAL
BOM AND PIN OUT SHEET

ASSEMBLY DESCRIPTION	ASSEMBLY PART NUMBER	COMPONENT				BLOCKED TERMINALS											STATUS	COMMENTS	OPTIONAL ATTATCHMENTS SOLD SEPERATELY	
		THE PRESENCE OF AN ABBREVIATION INDICATES THE PRESENCE OF THAT COMPONENT.				CAVITY WITH A NUMBER INDICATES BLOCKED TERMINAL POSITION CAVITY WITHOUT A NUMBER INDICATES OPEN TERMINAL POSITION														
		HOUSING KEY/COLOR	GROMMET CAP	PLR	MAT SEAL	1	2	3	4	5	6								BACKSHELL WITH RIBS	BACKSHELL WITHOUT RIBS
KEY A, BLACK	33482-3650	A-BLK	GC	PLR	M	1		3		5							SALEABLE		34950-0610	34950-0620
KEY A, BLACK	33482-3651	A-BLK	GC	PLR	M		2		4		6						SALEABLE		34950-0610	34950-0620
KEY A, BLACK	33482-3652	A-BLK	GC	PLR	M	1					6						SALEABLE		34950-0610	34950-0620

molex

MX150 2X4 BLADE SEALED ASSEMBLY MAT SEAL
BOM AND PIN OUT SHEET

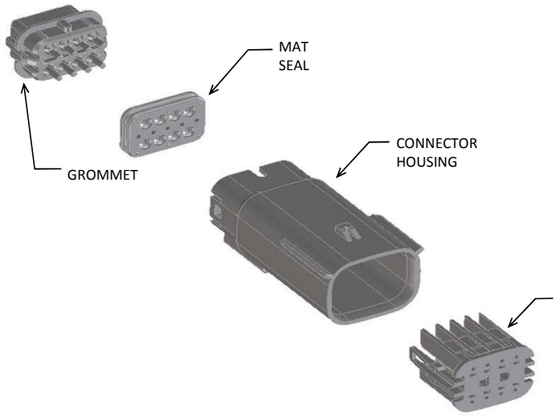

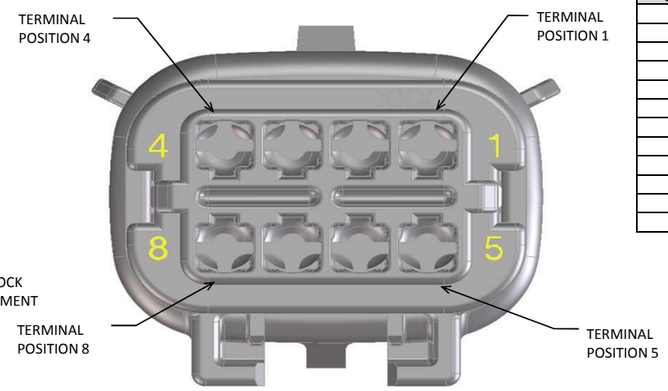

ABBREVIATION	DESCRIPTION	COLOR	MATERIAL
A-BLK	HOUSING, KEYING OPTION A	BLACK	SPS/NYLON GF20
B-LG	HOUSING, KEYING OPTION B	LIGHT GRAY	SPS/NYLON GF20
C-BR	HOUSING, KEYING OPTION C	BROWN	SPS/NYLON GF20
D-GR	HOUSING, KEYING OPTION D	GREEN	SPS/NYLON GF20
C-DG	HOUSING, KEYING OPTION C	DARK GRAY	SPS/NYLON GF20
D-SG	HOUSING, KEYING OPTION D	STONE GRAY	SPS/NYLON GF20
A-YW	HOUSING, KEYING OPTION A	YELLOW	SPS/NYLON GF20
GCP	GROMMET CAP (PLUGGED)	BLACK	SPS/NYLON GF20
GCO	GROMMET CAP (OPEN)	BLACK	SPS/NYLON GF20
PLR	PLR	NATURAL	SPS/NYLON GF20
M-R	MAT SEAL	RUST RED	INHERENTLY LUBRICATED SILICONE
M-B	MAT SEAL	ROYAL BLUE	INHERENTLY LUBRICATED SILICONE

FOR ADDITIONAL INFORMATION SEE SD-33482-0001

ASSEMBLY DESCRIPTION	ASSEMBLY PART NUMBER	COMPONENT				BLOCKED TERMINALS											STATUS	COMMENTS	OPTIONAL ATTATCHMENTS SOLD SEPERATELY	
		THE PRESENCE OF AN ABBREVIATION INDICATES THE PRESENCE OF THAT COMPONENT.				CAVITY WITH A NUMBER INDICATES BLOCKED TERMINAL POSITION CAVITY WITHOUT A NUMBER INDICATES OPEN TERMINAL POSITION														
		HOUSING KEY/COLOR	GROMMET CAP	PLR	MAT SEAL	1	2	3	4	5	6	7	8						BACKSHELL WITH RIBS	BACKSHELL WITHOUT RIBS
KEY A, BLACK	33482-0801	A-BLK	GCO	PLR	M-R												PLANNED OBSOLESCENCE	SEE 33482-4801	34950-0810	34950-0820
KEY B, LIGHT GRAY	33482-0802	B-LG	GCO	PLR	M-R												PLANNED OBSOLESCENCE	SEE 33482-4802	34950-0810	34950-0820
KEY C, BROWN	33482-0803	C-BR	GCO	PLR	M-R												PLANNED OBSOLESCENCE	SEE 33482-4803	34950-0810	34950-0820
KEY D, GREEN	33482-0804	D-GR	GCO	PLR	M-R												PLANNED OBSOLESCENCE	SEE 33482-4804	34950-0810	34950-0820
VOID KEY	33482-0805																			
KEY A, BLACK	33482-0806	A-BLK	GCP	PLR	M-R				4								PLANNED OBSOLESCENCE	SEE 33482-4806	34950-0810	34950-0820
KEY B, LIGHT GRAY	33482-0807	B-LG	GCP	PLR	M-R				4								PLANNED OBSOLESCENCE	SEE 33482-4807	34950-0810	34950-0820
KEY C, BROWN	33482-0808	C-BR	GCP	PLR	M-R				4								PLANNED OBSOLESCENCE	SEE 33482-4808	34950-0810	34950-0820
KEY D, GREEN	33482-0809	D-GR	GCP	PLR	M-R				4								PLANNED OBSOLESCENCE	SEE 33482-4809	34950-0810	34950-0820
VOID KEY	33482-0810																			
KEY A, BLACK	33482-0811	A-BLK	GCP	PLR	M-R				4	5							PLANNED OBSOLESCENCE	SEE 33482-4811	34950-0810	34950-0820
KEY B, LIGHT GRAY	33482-0812	B-LG	GCP	PLR	M-R				4	5							PLANNED OBSOLESCENCE	SEE 33482-4812	34950-0810	34950-0820
KEY C, BROWN	33482-0813	C-BR	GCP	PLR	M-R				4	5							PLANNED OBSOLESCENCE	SEE 33482-4813	34950-0810	34950-0820
KEY D, GREEN	33482-0814	D-GR	GCP	PLR	M-R				4	5							PLANNED OBSOLESCENCE	SEE 33482-4814	34950-0810	34950-0820
VOID KEY	33482-0815																			
KEY A, BLACK	33482-0816	A-BLK	GCP	PLR	M-R	1			4	5							PLANNED OBSOLESCENCE	SEE 33482-4816	34950-0810	34950-0820
KEY B, LIGHT GRAY	33482-0817	B-LG	GCP	PLR	M-R	1			4	5							PLANNED OBSOLESCENCE	SEE 33482-4817	34950-0810	34950-0820
KEY C, BROWN	33482-0818	C-BR	GCP	PLR	M-R	1			4	5							PLANNED OBSOLESCENCE	SEE 33482-4818	34950-0810	34950-0820
KEY D, GREEN	33482-0819	D-GR	GCP	PLR	M-R	1			4	5							PLANNED OBSOLESCENCE	SEE 33482-4819	34950-0810	34950-0820
VOID KEY	33482-0820																			
KEY A, BLACK	33482-0821	A-BLK	GCP	PLR	M-R	1			4	5			8				PLANNED OBSOLESCENCE	SEE 33482-4821	34950-0810	34950-0820
KEY B, LIGHT GRAY	33482-0822	B-LG	GCP	PLR	M-R	1			4	5			8				PLANNED OBSOLESCENCE	SEE 33482-4822	34950-0810	34950-0820
KEY C, BROWN	33482-0823	C-BR	GCP	PLR	M-R	1			4	5			8				PLANNED OBSOLESCENCE	SEE 33482-4823	34950-0810	34950-0820
KEY D, GREEN	33482-0824	D-GR	GCP	PLR	M-R	1			4	5			8				PLANNED OBSOLESCENCE	SEE 33482-4824	34950-0810	34950-0820
VOID KEY	33482-0825																			
KEY A, BLACK	33482-0826	A-BLK	GCP	PLR	M-R	1	2	3			6	7	8				PLANNED OBSOLESCENCE	SEE 33482-4826	34950-0810	34950-0820
KEY A, BLACK	33482-0827	A-BLK	GCP	PLR	M-R								8				PLANNED OBSOLESCENCE	SEE 33482-4827	34950-0810	34950-0820
KEY A, BLACK	33482-0828	A-BLK	GCP	PLR	M-R			3		5							PLANNED OBSOLESCENCE	SEE 33482-4828	34950-0810	34950-0820
KEY A, BLACK	33482-0829	A-BLK	GCP	PLR	M-R		2	3	4	5	6	7					PLANNED OBSOLESCENCE	SEE 33482-4829	34950-0810	34950-0820
KEY A, BLACK	33482-0830	A-BLK	GCP	PLR	M-R						6						PLANNED OBSOLESCENCE	SEE 33482-4830	34950-0810	34950-0820
KEY A, BLACK	33482-0831	A-BLK	GCP	PLR	M-R			3		5	6						PLANNED OBSOLESCENCE	SEE 33482-4831	34950-0810	34950-0820
KEY A, BLACK	33482-0832	A-BLK	GCP	PLR	M-R					5	6		8				PLANNED OBSOLESCENCE	SEE 33482-4832	34950-0810	34950-0820
KEY A, BLACK	33482-0833	A-BLK	GCP	PLR	M-R	1		3		5							PLANNED OBSOLESCENCE	SEE 33482-4833	34950-0810	34950-0820
KEY A, BLACK	33482-0834	A-BLK	GCP	PLR	M-R	1	2	3	4	5	6	7	8				PLANNED OBSOLESCENCE	SEE 33482-4834	34950-0810	34950-0820
KEY A, BLACK	33482-0835	A-BLK	GCP	PLR	M-R							7	8				PLANNED OBSOLESCENCE	SEE 33482-4835	34950-0810	34950-0820
KEY A, BLACK	33482-0836	A-BLK	GCP	PLR	M-R		2	3			6	7	8				PLANNED OBSOLESCENCE	SEE 33482-4836	34950-0810	34950-0820
KEY A, BLACK	33482-0837	A-BLK	GCP	PLR	M-R	1			4								PLANNED OBSOLESCENCE	SEE 33482-4837	34950-0810	34950-0820
KEY A, BLACK	33482-0838	A-BLK	GCP	PLR	M-R		2	3		5	6	7	8				PLANNED OBSOLESCENCE	SEE 33482-4838	34950-0810	34950-0820
KEY B, LIGHT GRAY	33482-0839	B-LG	GCP	PLR	M-R								8				PLANNED OBSOLESCENCE	SEE 33482-4839	34950-0810	34950-0820
KEY A, BLACK	33482-0840	A-BLK	GCP	PLR	M-R		2	3		5	6		8				PLANNED OBSOLESCENCE	SEE 33482-4840	34950-0810	34950-0820
KEY A, BLACK	33482-0841	A-BLK	GCP	PLR	M-R						6	7					PLANNED OBSOLESCENCE	SEE 33482-4841	34950-0810	34950-0820
KEY A, BLACK	33482-0842	A-BLK	GCP	PLR	M-R							7					PLANNED OBSOLESCENCE	SEE 33482-4842	34950-0810	34950-0820
KEY A, BLACK	33482-0843	A-BLK	GCP	PLR	M-R				4			7					PLANNED OBSOLESCENCE	SEE 33482-4843	34950-0810	34950-0820
KEY A, BLACK	33482-0844	A-BLK	GCP	PLR	M-R			3			6						PLANNED OBSOLESCENCE	SEE 33482-4844	34950-0810	34950-0820
KEY A, BLACK	33482-0845	A-BLK	GCP	PLR	M-R		2	3	4	5	6						PLANNED OBSOLESCENCE	SEE 33482-4845	34950-0810	34950-0820
KEY A, BLACK	33482-0846	A-BLK	GCP	PLR	M-R				4	5		7	8				PLANNED OBSOLESCENCE	SEE 33482-4846	34950-0810	34950-0820
KEY B, LIGHT GRAY	33482-0847	B-LG	GCP	PLR	M-R	1	2	3	4	5	6	7	8				PLANNED OBSOLESCENCE	SEE 33482-4847	34950-0810	34950-0820
KEY A, BLACK	33482-0848	A-BLK	GCP	PLR	M-R	1				5							PLANNED OBSOLESCENCE	SEE 33482-4848	34950-0810	34950-0820

molex

MX150 2X4 BLADE SEALED ASSEMBLY MAT SEAL
BOM AND PIN OUT SHEET

ASSEMBLY DESCRIPTION	ASSEMBLY PART NUMBER	COMPONENT				BLOCKED TERMINALS											STATUS	COMMENTS	OPTIONAL ATTATCHMENTS SOLD SEPERATELY	
		THE PRESENCE OF AN ABBREVIATION INDICATES THE PRESENCE OF THAT COMPONENT.				CAVITY WITH A NUMBER INDICATES BLOCKED TERMINAL POSITION CAVITY WITHOUT A NUMBER INDICATES OPEN TERMINAL POSITION														
		HOUSING KEY/COLOR	GROMMET CAP	PLR	MAT SEAL	1	2	3	4	5	6	7	8						BACKSHELL WITH RIBS	BACKSHELL WITHOUT RIBS
KEY B, LIGHT GRAY	33482-0849	B-LG	GCP	PLR	M-R	1					6						PLANNED OBSOLESCENCE	SEE 33482-4849	34950-0810	34950-0820
KEY A, YELLOW	33482-0850	A-YW	GCP	PLR	M-R	1			4								PLANNED OBSOLESCENCE	SEE 33482-4850	34950-0810	34950-0820
KEY A, YELLOW	33482-0851	A-YW	GCO	PLR	M-R												PLANNED OBSOLESCENCE	SEE 33482-4851	34950-0810	34950-0820
KEY C, DARK GRAY	33482-0852	C-DG	GCO	PLR	M-R												PLANNED OBSOLESCENCE	SEE 33482-4852	34950-0810	34950-0820
KEY D, STONE GRAY	33482-0853	D-SG	GCO	PLR	M-R												PLANNED OBSOLESCENCE	SEE 33482-4853	34950-0810	34950-0820
KEY A, BLACK	33482-0854	A-BLK	GCP	PLR	M-R	1	2	3	4								PLANNED OBSOLESCENCE	SEE 33482-4854	34950-0810	34950-0820
KEY A, BLACK	33482-0855	A-BLK	GCP	PLR	M-R	1	2			5	6	7	8				PLANNED OBSOLESCENCE	SEE 33482-4855	34950-0810	34950-0820
KEY A, BLACK	33482-0856	A-BLK	GCP	PLR	M-R	1	2										PLANNED OBSOLESCENCE	SEE 33482-4856	34950-0810	34950-0820
KEY A, BLACK	33482-0857	A-BLK	GCP	PLR	M-R	1	2	3		5							PLANNED OBSOLESCENCE	SEE 33482-4857	34950-0810	34950-0820
KEY A, BLACK	33482-0858	A-BLK	GCP	PLR	M-R	1	2	3	4	5			8				PLANNED OBSOLESCENCE	SEE 33482-4858	34950-0810	34950-0820
KEY A, BLACK	33482-0859	A-BLK	GCP	PLR	M-R	1		3		5	6	7					PLANNED OBSOLESCENCE	SEE 33482-4859	34950-0810	34950-0820
KEY A, BLACK	33482-0860	A-BLK	GCP	PLR	M-R	1	2	3	4	5	6						PLANNED OBSOLESCENCE	SEE 33482-4860	34950-0810	34950-0820
KEY A, BLACK	33482-0861	A-BLK	GCP	PLR	M-R	1	2	3			6						PLANNED OBSOLESCENCE	SEE 33482-4861	34950-0810	34950-0820
KEY A, BLACK	33482-0862	A-BLK	GCP	PLR	M-R	1					6						PLANNED OBSOLESCENCE	SEE 33482-4862	34950-0810	34950-0820
KEY A, BLACK	33482-0863	A-BLK	GCP	PLR	M-R	1					6	7	8				PLANNED OBSOLESCENCE	SEE 33482-4863	34950-0810	34950-0820
KEY A, BLACK	33482-0864	A-BLK	GCP	PLR	M-R			3	4	5	6	7	8				PLANNED OBSOLESCENCE	SEE 33482-4864	34950-0810	34950-0820
KEY A, BLACK	33482-0865	A-BLK	GCP	PLR	M-R				4			7	8				PLANNED OBSOLESCENCE	SEE 33482-4865	34950-0810	34950-0820
KEY A, BLACK	33482-0866	A-BLK	GCP	PLR	M-R				4	5	6	7	8				PLANNED OBSOLESCENCE	SEE 33482-4866	34950-0810	34950-0820
KEY A, BLACK	33482-0867	A-BLK	GCP	PLR	M-R		2	3	4		6	7	8				PLANNED OBSOLESCENCE	SEE 33482-4867	34950-0810	34950-0820
KEY A, BLACK	33482-0868	A-BLK	GCP	PLR	M-R					5	6	7					PLANNED OBSOLESCENCE	SEE 33482-4868	34950-0810	34950-0820
KEY A, BLACK	33482-0869	A-BLK	GCP	PLR	M-R			3	4								PLANNED OBSOLESCENCE	SEE 33482-4869	34950-0810	34950-0820
KEY A, BLACK	33482-0870	A-BLK	GCP	PLR	M-R						6	7	8				PLANNED OBSOLESCENCE	SEE 33482-4870	34950-0810	34950-0820
KEY B, LIGHT GRAY	33482-0871	B-LG	GCP	PLR	M-R							7	8				PLANNED OBSOLESCENCE	SEE 33482-4871	34950-0810	34950-0820
KEY A, BLACK	33482-0872	A-BLK	GCP	PLR	M-R	1							8				PLANNED OBSOLESCENCE	SEE 33482-4872	34950-0810	34950-0820
KEY A, BLACK	33482-0873	A-BLK	GCP	PLR	M-R						6		8				PLANNED OBSOLESCENCE	SEE 33482-4873	34950-0810	34950-0820
KEY A, BLACK	33482-0874	A-BLK	GCP	PLR	M-R		2			5							PLANNED OBSOLESCENCE	SEE 33482-4874	34950-0810	34950-0820
KEY A, BLACK	33482-0875	A-BLK	GCP	PLR	M-R					5							PLANNED OBSOLESCENCE	SEE 33482-4875	34950-0810	34950-0820
KEY B, LIGHT GRAY	33482-0876	B-LG	GCP	PLR	M-R	1		3					8				PLANNED OBSOLESCENCE	SEE 33482-4876	34950-0810	34950-0820
KEY B, LIGHT GRAY	33482-0877	B-LG	GCP	PLR	M-R			3					8				PLANNED OBSOLESCENCE	SEE 33482-4877	34950-0810	34950-0820
KEY B, LIGHT GRAY	33482-0878	B-LG	GCP	PLR	M-R	1											PLANNED OBSOLESCENCE	SEE 33482-4878	34950-0810	34950-0820
KEY A, BLACK	33482-0879	A-BLK	GCP	PLR	M-R	1	2	3	4	5		7					PLANNED OBSOLESCENCE	SEE 33482-4879	34950-0810	34950-0820
KEY A, BLACK	33482-0880	A-BLK	GCP	PLR	M-R	1											PLANNED OBSOLESCENCE	SEE 33482-4880	34950-0810	34950-0820
KEY A, BLACK	33482-0881	A-BLK	GCP	PLR	M-R					5			8				PLANNED OBSOLESCENCE	SEE 33482-4881	34950-0810	34950-0820
KEY A, BLACK	33482-0882	A-BLK	GCP	PLR	M-R				4		6						PLANNED OBSOLESCENCE	SEE 33482-4882	34950-0810	34950-0820
KEY A, BLACK	33482-0883	A-BLK	GCP	PLR	M-R	1						7					PLANNED OBSOLESCENCE	SEE 33482-4883	34950-0810	34950-0820
KEY A, BLACK	33482-4801	A-BLK	GCO	PLR	M-B												SALEABLE		34950-0810	34950-0820
KEY B, LIGHT GRAY	33482-4802	B-LG	GCO	PLR	M-B												SALEABLE		34950-0810	34950-0820
KEY C, BROWN	33482-4803	C-BR	GCO	PLR	M-B												NOT RECOMMENDED	SEE 33482-4852	34950-0810	34950-0820
KEY D, GREEN	33482-4804	D-GR	GCO	PLR	M-B												NOT RECOMMENDED	SEE 33482-4853	34950-0810	34950-0820
VOID KEY	33482-4805																			
KEY A, BLACK	33482-4806	A-BLK	GCP	PLR	M-B				4								SALEABLE		34950-0810	34950-0820
KEY B, LIGHT GRAY	33482-4807	B-LG	GCP	PLR	M-B				4								SALEABLE		34950-0810	34950-0820
KEY C, BROWN	33482-4808	C-BR	GCP	PLR	M-B				4								NOT RECOMMENDED		34950-0810	34950-0820
KEY D, GREEN	33482-4809	D-GR	GCP	PLR	M-B				4								NOT RECOMMENDED		34950-0810	34950-0820
VOID KEY	33482-4810																			
KEY A, BLACK	33482-4811	A-BLK	GCP	PLR	M-B				4	5							SALEABLE		34950-0810	34950-0820
KEY B, LIGHT GRAY	33482-4812	B-LG	GCP	PLR	M-B				4	5							SALEABLE		34950-0810	34950-0820
KEY C, BROWN	33482-4813	C-BR	GCP	PLR	M-B				4	5							NOT RECOMMENDED		34950-0810	34950-0820
KEY D, GREEN	33482-4814	D-GR	GCP	PLR	M-B				4	5							NOT RECOMMENDED		34950-0810	34950-0820
VOID KEY	33482-4815																			
KEY A, BLACK	33482-4816	A-BLK	GCP	PLR	M-B	1			4	5							SALEABLE		34950-0810	34950-0820
KEY B, LIGHT GRAY	33482-4817	B-LG	GCP	PLR	M-B	1			4	5							SALEABLE		34950-0810	34950-0820
KEY C, BROWN	33482-4818	C-BR	GCP	PLR	M-B	1			4	5							NOT RECOMMENDED		34950-0810	34950-0820
KEY D, GREEN	33482-4819	D-GR	GCP	PLR	M-B	1			4	5							NOT RECOMMENDED		34950-0810	34950-0820
VOID KEY	33482-4820																			
KEY A, BLACK	33482-4821	A-BLK	GCP	PLR	M-B	1			4	5			8				SALEABLE		34950-0810	34950-0820
KEY B, LIGHT GRAY	33482-4822	B-LG	GCP	PLR	M-B	1			4	5			8				SALEABLE		34950-0810	34950-0820
KEY C, BROWN	33482-4823	C-BR	GCP	PLR	M-B	1			4	5			8				NOT RECOMMENDED		34950-0810	34950-0820
KEY D, GREEN	33482-4824	D-GR	GCP	PLR	M-B	1			4	5			8				NOT RECOMMENDED		34950-0810	34950-0820
VOID KEY	33482-4825																			
KEY A, BLACK	33482-4826	A-BLK	GCP	PLR	M-B	1	2	3			6	7	8				SALEABLE		34950-0810	34950-0820
KEY A, BLACK	33482-4827	A-BLK	GCP	PLR	M-B								8				SALEABLE		34950-0810	34950-0820
KEY A, BLACK	33482-4828	A-BLK	GCP	PLR	M-B			3		5							SALEABLE		34950-0810	34950-0820
KEY A, BLACK	33482-4829	A-BLK	GCP	PLR	M-B		2	3	4	5	6	7					SALEABLE		34950-0810	34950-0820
KEY A, BLACK	33482-4830	A-BLK	GCP	PLR	M-B						6						SALEABLE		34950-0810	34950-0820
KEY A, BLACK	33482-4831	A-BLK	GCP	PLR	M-B			3		5	6						SALEABLE		34950-0810	34950-0820
KEY A, BLACK	33482-4832	A-BLK	GCP	PLR	M-B					5	6		8				SALEABLE		34950-0810	34950-0820
KEY A, BLACK	33482-4833	A-BLK	GCP	PLR	M-B	1		3		5							SALEABLE		34950-0810	34950-0820
KEY A, BLACK	33482-4834	A-BLK	GCP	PLR	M-B	1	2	3	4	5	6	7	8				SALEABLE		34950-0810	34950-0820
KEY A, BLACK	33482-4835	A-BLK	GCP	PLR	M-B							7	8				SALEABLE		34950-0810	34950-0820
KEY A, BLACK	33482-4836	A-BLK	GCP	PLR	M-B		2	3			6	7	8				SALEABLE		34950-0810	34950-0820
KEY A, BLACK	33482-4837	A-BLK	GCP	PLR	M-B	1			4								SALEABLE		34950-0810	34950-0820
KEY A, BLACK	33482-4838	A-BLK	GCP	PLR	M-B		2	3		5	6	7	8				SALEABLE		34950-0810	34950-0820
KEY B, LIGHT GRAY	33482-4839	B-LG	GCP	PLR	M-B								8				SALEABLE		34950-0810	34950-0820
KEY A, BLACK	33482-4840	A-BLK	GCP	PLR	M-B		2	3		5	6		8				SALEABLE		34950-0810	34950-0820

molex

MX150 2X4 BLADE SEALED ASSEMBLY MAT SEAL
BOM AND PIN OUT SHEET

ASSEMBLY DESCRIPTION	ASSEMBLY PART NUMBER	COMPONENT				BLOCKED TERMINALS											STATUS	COMMENTS	OPTIONAL ATTATCHMENTS SOLD SEPERATELY	
		THE PRESENCE OF AN ABBREVIATION INDICATES THE PRESENCE OF THAT COMPONENT.				CAVITY WITH A NUMBER INDICATES BLOCKED TERMINAL POSITION CAVITY WITHOUT A NUMBER INDICATES OPEN TERMINAL POSITION														
		HOUSING KEY/COLOR	GROMMET CAP	PLR	MAT SEAL	1	2	3	4	5	6	7	8						BACKSHELL WITH RIBS	BACKSHELL WITHOUT RIBS
KEY A, BLACK	33482-4841	A-BLK	GCP	PLR	M-B						6	7					SALEABLE		34950-0810	34950-0820
KEY A, BLACK	33482-4842	A-BLK	GCP	PLR	M-B							7					SALEABLE		34950-0810	34950-0820
KEY A, BLACK	33482-4843	A-BLK	GCP	PLR	M-B				4			7					SALEABLE		34950-0810	34950-0820
KEY A, BLACK	33482-4844	A-BLK	GCP	PLR	M-B			3			6						SALEABLE		34950-0810	34950-0820
KEY A, BLACK	33482-4845	A-BLK	GCP	PLR	M-B		2	3	4	5	6						SALEABLE		34950-0810	34950-0820
KEY A, BLACK	33482-4846	A-BLK	GCP	PLR	M-B				4	5		7	8				SALEABLE		34950-0810	34950-0820
KEY B, LIGHT GRAY	33482-4847	B-LG	GCP	PLR	M-B	1	2	3	4	5	6	7	8				SALEABLE		34950-0810	34950-0820
KEY A, BLACK	33482-4848	A-BLK	GCP	PLR	M-B	1				5							SALEABLE		34950-0810	34950-0820
KEY B, LIGHT GRAY	33482-4849	B-LG	GCP	PLR	M-B	1					6						SALEABLE		34950-0810	34950-0820
KEY A, YELLOW	33482-4850	A-YW	GCP	PLR	M-B	1			4								SALEABLE		34950-0810	34950-0820
KEY A, YELLOW	33482-4851	A-YW	GCO	PLR	M-B												SALEABLE		34950-0810	34950-0820
KEY C, DARK GRAY	33482-4852	C-DG	GCO	PLR	M-B												SALEABLE		34950-0810	34950-0820
KEY D, STONE GRAY	33482-4853	D-SG	GCO	PLR	M-B												SALEABLE		34950-0810	34950-0820
KEY A, BLACK	33482-4854	A-BLK	GCP	PLR	M-B	1	2	3	4								SALEABLE		34950-0810	34950-0820
KEY A, BLACK	33482-4855	A-BLK	GCP	PLR	M-B	1	2			5	6	7	8				SALEABLE		34950-0810	34950-0820
KEY A, BLACK	33482-4856	A-BLK	GCP	PLR	M-B	1	2										SALEABLE		34950-0810	34950-0820
KEY A, BLACK	33482-4857	A-BLK	GCP	PLR	M-B	1	2	3		5							SALEABLE		34950-0810	34950-0820
KEY A, BLACK	33482-4858	A-BLK	GCP	PLR	M-B	1	2	3	4	5			8				SALEABLE		34950-0810	34950-0820
KEY A, BLACK	33482-4859	A-BLK	GCP	PLR	M-B	1		3		5	6	7					SALEABLE		34950-0810	34950-0820
KEY A, BLACK	33482-4860	A-BLK	GCP	PLR	M-B	1	2	3	4	5	6						SALEABLE		34950-0810	34950-0820
KEY A, BLACK	33482-4861	A-BLK	GCP	PLR	M-B	1	2	3			6						SALEABLE		34950-0810	34950-0820
KEY A, BLACK	33482-4862	A-BLK	GCP	PLR	M-B	1					6						SALEABLE		34950-0810	34950-0820
KEY A, BLACK	33482-4863	A-BLK	GCP	PLR	M-B	1					6	7	8				SALEABLE		34950-0810	34950-0820
KEY A, BLACK	33482-4864	A-BLK	GCP	PLR	M-B			3	4	5	6	7	8				SALEABLE		34950-0810	34950-0820
KEY A, BLACK	33482-4865	A-BLK	GCP	PLR	M-B				4			7	8				SALEABLE		34950-0810	34950-0820
KEY A, BLACK	33482-4866	A-BLK	GCP	PLR	M-B				4	5	6	7	8				SALEABLE		34950-0810	34950-0820
KEY A, BLACK	33482-4867	A-BLK	GCP	PLR	M-B		2	3	4		6	7	8				SALEABLE		34950-0810	34950-0820
KEY A, BLACK	33482-4868	A-BLK	GCP	PLR	M-B					5	6	7					SALEABLE		34950-0810	34950-0820
KEY A, BLACK	33482-4869	A-BLK	GCP	PLR	M-B			3	4								SALEABLE		34950-0810	34950-0820
KEY A, BLACK	33482-4870	A-BLK	GCP	PLR	M-B						6	7	8				SALEABLE		34950-0810	34950-0820
KEY B, LIGHT GRAY	33482-4871	B-LG	GCP	PLR	M-B							7	8				SALEABLE		34950-0810	34950-0820
KEY A, BLACK	33482-4872	A-BLK	GCP	PLR	M-B	1							8				SALEABLE		34950-0810	34950-0820
KEY A, BLACK	33482-4873	A-BLK	GCP	PLR	M-B						6		8				SALEABLE		34950-0810	34950-0820
KEY A, BLACK	33482-4874	A-BLK	GCP	PLR	M-B		2			5							SALEABLE		34950-0810	34950-0820
KEY A, BLACK	33482-4875	A-BLK	GCP	PLR	M-B					5							SALEABLE		34950-0810	34950-0820
KEY B, LIGHT GRAY	33482-4876	B-LG	GCP	PLR	M-B	1		3					8				SALEABLE		34950-0810	34950-0820
KEY B, LIGHT GRAY	33482-4877	B-LG	GCP	PLR	M-B			3					8				SALEABLE		34950-0810	34950-0820
KEY B, LIGHT GRAY	33482-4878	B-LG	GCP	PLR	M-B	1											SALEABLE		34950-0810	34950-0820
KEY A, BLACK	33482-4879	A-BLK	GCP	PLR	M-B	1	2	3	4	5		7					SALEABLE		34950-0810	34950-0820
KEY A, BLACK	33482-4880	A-BLK	GCP	PLR	M-B	1											SALEABLE		34950-0810	34950-0820
KEY A, BLACK	33482-4881	A-BLK	GCP	PLR	M-B					5			8				SALEABLE		34950-0810	34950-0820
KEY A, BLACK	33482-4882	A-BLK	GCP	PLR	M-B				4		6						SALEABLE		34950-0810	34950-0820
KEY A, BLACK	33482-4883	A-BLK	GCP	PLR	M-B	1						7					SALEABLE		34950-0810	34950-0820

MX150 2X6 BLADE SEALED ASSY MAT SEAL
BOM AND PIN OUT SHEET

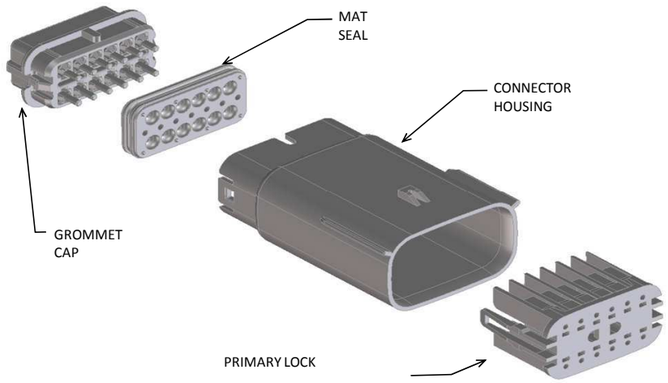

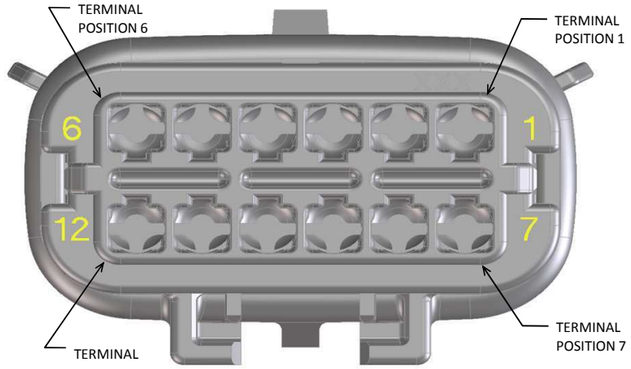

ABBREVIATION	DESCRIPTION	COLOR	MATERIAL
A-BLK	HOUSING, KEYING OPTION A	BLACK	SPS/NYLON GF20
B-LG	HOUSING, KEYING OPTION B	LIGHT GRAY	SPS/NYLON GF20
C-BR	HOUSING, KEYING OPTION C	BROWN	SPS/NYLON GF20
D-GR	HOUSING, KEYING OPTION D	GREEN	SPS/NYLON GF20
A-YL	HOUSING, KEYING OPTION A	YELLOW	SPS/NYLON GF20
C-DG	HOUSING, KEYING OPTION C	DARK GRAY	SPS/NYLON GF20
D-SG	HOUSING, KEYING OPTION D	STONE GRAY	SPS/NYLON GF20
GCP	GROMMET CAP (PLUGGED)	BLACK	SPS/NYLON GF20
PLR	PLR	NATURAL	SPS/NYLON GF20
M-R	MAT SEAL	RUST RED	INHERENTLY LUBRICATED SILICONE
M-B	MAT SEAL	ROYAL BLUE	INHERENTLY LUBRICATED SILICONE

FOR ADDITIONAL INFORMATION SEE SD-33482-0001

ASSEMBLY DESCRIPTION	ASSEMBLY PART NUMBER	COMPONENT				BLOCKED TERMINALS												STATUS	COMMENTS	OPTIONAL ATTATCHMENTS SOLD SEPERATELY	
		THE PRESENCE OF AN ABBREVIATION INDICATES THE PRESENCE OF THAT COMPONENT.				CAVITY WITH A NUMBER INDICATES BLOCKED TERMINAL POSITION CAVITY WITHOUT A NUMBER INDICATES OPEN TERMINAL POSITION															
		HOUSING KEY/COLOR	GROMMET CAP	PLR	MAT SEAL	1	2	3	4	5	6	7	8	9	10	11	12			BACKSHELL WITH RIBS	BACKSHELL WITHOUT RIBS
KEY A, BLACK	33482-1201	A-BLK	GCP	PLR	M-R													PLANNED OBSOLESCENCE	SEE 33482-6201	34950-1210	34950-1220
KEY B, LIGHT GRAY	33482-1202	B-LG	GCP	PLR	M-R													PLANNED OBSOLESCENCE	SEE 33482-6202	34950-1210	34950-1220
KEY C, BROWN	33482-1203	C-BR	GCP	PLR	M-R													PLANNED OBSOLESCENCE	SEE 33482-6203	34950-1210	34950-1220
KEY D, GREEN	33482-1204	D-GR	GCP	PLR	M-R													PLANNED OBSOLESCENCE	SEE 33482-6204	34950-1210	34950-1220
VOID KEY	33482-1205																				
KEY A, BLACK	33482-1206	A-BLK	GCP	PLR	M-R						6							PLANNED OBSOLESCENCE	SEE 33482-6206	34950-1210	34950-1220
KEY B, LIGHT GRAY	33482-1207	B-LG	GCP	PLR	M-R						6							PLANNED OBSOLESCENCE	SEE 33482-6207	34950-1210	34950-1220
KEY C, BROWN	33482-1208	C-BR	GCP	PLR	M-R						6							PLANNED OBSOLESCENCE	SEE 33482-6208	34950-1210	34950-1220
KEY D, GREEN	33482-1209	D-GR	GCP	PLR	M-R						6							PLANNED OBSOLESCENCE	SEE 33482-6209	34950-1210	34950-1220
VOID KEY	33482-1210																				
KEY A, BLACK	33482-1211	A-BLK	GCP	PLR	M-R						6	7						PLANNED OBSOLESCENCE	SEE 33482-6211	34950-1210	34950-1220
KEY B, LIGHT GRAY	33482-1212	B-LG	GCP	PLR	M-R						6	7						PLANNED OBSOLESCENCE	SEE 33482-6212	34950-1210	34950-1220
KEY C, BROWN	33482-1213	C-BR	GCP	PLR	M-R						6	7						PLANNED OBSOLESCENCE	SEE 33482-6213	34950-1210	34950-1220
KEY D, GREEN	33482-1214	D-GR	GCP	PLR	M-R						6	7						PLANNED OBSOLESCENCE	SEE 33482-6214	34950-1210	34950-1220
VOID KEY	33482-1215																				
KEY A, BLACK	33482-1216	A-BLK	GCP	PLR	M-R	1					6	7						PLANNED OBSOLESCENCE	SEE 33482-6216	34950-1210	34950-1220
KEY B, LIGHT GRAY	33482-1217	B-LG	GCP	PLR	M-R	1					6	7						PLANNED OBSOLESCENCE	SEE 33482-6217	34950-1210	34950-1220
KEY C, BROWN	33482-1218	C-BR	GCP	PLR	M-R	1					6	7						PLANNED OBSOLESCENCE	SEE 33482-6218	34950-1210	34950-1220
KEY D, GREEN	33482-1219	D-GR	GCP	PLR	M-R	1					6	7						PLANNED OBSOLESCENCE	SEE 33482-6219	34950-1210	34950-1220
VOID KEY	33482-1220																				
KEY A, BLACK	33482-1221	A-BLK	GCP	PLR	M-R	1					6	7					12	PLANNED OBSOLESCENCE	SEE 33482-6221	34950-1210	34950-1220
KEY B, LIGHT GRAY	33482-1222	B-LG	GCP	PLR	M-R	1					6	7					12	PLANNED OBSOLESCENCE	SEE 33482-6222	34950-1210	34950-1220
KEY C, BROWN	33482-1223	C-BR	GCP	PLR	M-R	1					6	7					12	PLANNED OBSOLESCENCE	SEE 33482-6223	34950-1210	34950-1220
KEY D, GREEN	33482-1224	D-GR	GCP	PLR	M-R	1					6	7					12	PLANNED OBSOLESCENCE	SEE 33482-6224	34950-1210	34950-1220
VOID KEY	33482-1225																				
KEY A, BLACK	33482-1226	A-BLK	GCP	PLR	M-R						6						12	PLANNED OBSOLESCENCE	SEE 33482-6226	34950-1210	34950-1220
KEY A, BLACK	33482-1227	A-BLK	GCP	PLR	M-R	1	2	3	4	5	6	7	8	9	10	11	12	PLANNED OBSOLESCENCE	SEE 33482-6227	34950-1210	34950-1220
KEY B, LIGHT GRAY	33482-1228	B-LG	GCP	PLR	M-R	1	2	3	4	5	6	7	8	9	10	11	12	PLANNED OBSOLESCENCE	SEE 33482-6228	34950-1210	34950-1220
KEY C, BROWN	33482-1229	C-BR	GCP	PLR	M-R	1	2	3	4	5	6	7	8	9	10	11	12	PLANNED OBSOLESCENCE	SEE 33482-6229	34950-1210	34950-1220
KEY D, GREEN	33482-1230	D-GR	GCP	PLR	M-R	1	2	3	4	5	6	7	8	9	10	11	12	PLANNED OBSOLESCENCE	SEE 33482-6230	34950-1210	34950-1220
VOID KEY	33482-1231																				
KEY A, BLACK	33482-1232	A-BLK	GCP	PLR	M-R		2	3					8			11		PLANNED OBSOLESCENCE	SEE 33482-6232	34950-1210	34950-1220
KEY A, BLACK	33482-1233	A-BLK	GCP	PLR	M-R		2	3		5	6	7	8			11		PLANNED OBSOLESCENCE	SEE 33482-6233	34950-1210	34950-1220
KEY A, BLACK	33482-1234	A-BLK	GCP	PLR	M-R						6	7						PLANNED OBSOLESCENCE	SEE 33482-6234	34950-1210	34950-1220
KEY A, BLACK	33482-1235	A-BLK	GCP	PLR	M-R		2	3			6	7	8		10	11		PLANNED OBSOLESCENCE	SEE 33482-6235	34950-1210	34950-1220
KEY B, LIGHT GRAY	33482-1236	B-LG	GCP	PLR	M-R	1				5	6	7	8	9	10			PLANNED OBSOLESCENCE	SEE 33482-6236	34950-1210	34950-1220
KEY A, BLACK	33482-1237	A-BLK	GCP	PLR	M-R		2											PLANNED OBSOLESCENCE	SEE 33482-6237	34950-1210	34950-1220
KEY B, LIGHT GRAY	33482-1238	B-LG	GCP	PLR	M-R		2							9	10			PLANNED OBSOLESCENCE	SEE 33482-6238	34950-1210	34950-1220
KEY A, BLACK	33482-1239	A-BLK	GCP	PLR	M-R	1				5	6	7	8					PLANNED OBSOLESCENCE	SEE 33482-6239	34950-1210	34950-1220
KEY A, BLACK	33482-1240	A-BLK	GCP	PLR	M-R		2	3					8	9	10	11		PLANNED OBSOLESCENCE	SEE 33482-6240	34950-1210	34950-1220
KEY A, BLACK	33482-1241	A-BLK	GCP	PLR	M-R							7	8	9	10	11		PLANNED OBSOLESCENCE	SEE 33482-6241	34950-1210	34950-1220
KEY A, BLACK	33482-1242	A-BLK	GCP	PLR	M-R							7	8					PLANNED OBSOLESCENCE	SEE 33482-6242	34950-1210	34950-1220
KEY A, BLACK	33482-1243	A-BLK	GCP	PLR	M-R		2							9	10			PLANNED OBSOLESCENCE	SEE 33482-6243	34950-1210	34950-1220
KEY A, BLACK	33482-1244	A-BLK	GCP	PLR	M-R		2		4									PLANNED OBSOLESCENCE	SEE 33482-6244	34950-1210	34950-1220
KEY A, BLACK	33482-1245	A-BLK	GCP	PLR	M-R									9	10	11	12	PLANNED OBSOLESCENCE	SEE 33482-6245	34950-1210	34950-1220
KEY A, BLACK	33482-1246	A-BLK	GCP	PLR	M-R											11		PLANNED OBSOLESCENCE	SEE 33482-6246	34950-1210	34950-1220
KEY A, BLACK	33482-1247	A-BLK	GCP	PLR	M-R		2	3	4			7	8					PLANNED OBSOLESCENCE	SEE 33482-6247	34950-1210	34950-1220
KEY A, BLACK	33482-1248	A-BLK	GCP	PLR	M-R	1		3	4	5	6	7	8					PLANNED OBSOLESCENCE	SEE 33482-6248	34950-1210	34950-1220
KEY A, BLACK	33482-1249	A-BLK	GCP	PLR	M-R										10	11	12	PLANNED OBSOLESCENCE	SEE 33482-6249	34950-1210	34950-1220
KEY A, BLACK	33482-1250	A-BLK	GCP	PLR	M-R				4	5	6	7	8	9				PLANNED OBSOLESCENCE	SEE 33482-6250	34950-1210	34950-1220
KEY A, BLACK	33482-1251	A-BLK	GCP	PLR	M-R		2		4	5			8		10	11		PLANNED OBSOLESCENCE	SEE 33482-6251	34950-1210	34950-1220
KEY A, BLACK	33482-1252	A-BLK	GCP	PLR	M-R							7						PLANNED OBSOLESCENCE	SEE 33482-6252	34950-1210	34950-1220
KEY A, BLACK	33482-1253	A-BLK	GCP	PLR	M-R		2	3	4	5	6	7	8		10	11	12	PLANNED OBSOLESCENCE	SEE 33482-6253	34950-1210	34950-1220
KEY A, BLACK	33482-1254	A-BLK	GCP	PLR	M-R		2	3	4	5					10	11	12	PLANNED OBSOLESCENCE	SEE 33482-6254	34950-1210	34950-1220

MX150 2X6 BLADE SEALED ASSY MAT SEAL
BOM AND PIN OUT SHEET

ASSEMBLY DESCRIPTION	ASSEMBLY PART NUMBER	COMPONENT				BLOCKED TERMINALS												STATUS	COMMENTS	OPTIONAL ATTATCHMENTS SOLD SEPERATELY	
		THE PRESENCE OF AN ABBREVIATION INDICATES THE PRESENCE OF THAT COMPONENT.				CAVITY WITH A NUMBER INDICATES BLOCKED TERMINAL POSITION CAVITY WITHOUT A NUMBER INDICATES OPEN TERMINAL POSITION															
		HOUSING KEY/COLOR	GROMMET CAP	PLR	MAT SEAL	1	2	3	4	5	6	7	8	9	10	11	12			BACKSHELL WITH RIBS	BACKSHELL WITHOUT RIBS
KEY A, BLACK	33482-1255	A-BLK	GCP	PLR	M-R		2	3	4	5	6	7			10	11	12	PLANNED OBSOLESCENCE	SEE 33482-6255	34950-1210	34950-1220
KEY A, BLACK	33482-1256	A-BLK	GCP	PLR	M-R	1					6	7		9				PLANNED OBSOLESCENCE	SEE 33482-6256	34950-1210	34950-1220
KEY A, BLACK	33482-1257	A-BLK	GCP	PLR	M-R									9	10		12	PLANNED OBSOLESCENCE	SEE 33482-6257	34950-1210	34950-1220
KEY A, BLACK	33482-1258	A-BLK	GCP	PLR	M-R		2	3								11		PLANNED OBSOLESCENCE	SEE 33482-6258	34950-1210	34950-1220
KEY A, BLACK	33482-1259	A-BLK	GCP	PLR	M-R	1	2	3	4	5				9	10	11	12	PLANNED OBSOLESCENCE	SEE 33482-6259	34950-1210	34950-1220
KEY A, BLACK	33482-1260	A-BLK	GCP	PLR	M-R											11	12	PLANNED OBSOLESCENCE	SEE 33482-6260	34950-1210	34950-1220
KEY C, DARK GRAY	33482-1261	C-DG	GCP	PLR	M-R													PLANNED OBSOLESCENCE	SEE 33482-6261	34950-1210	34950-1220
KEY D, STONE GRAY	33482-1262	D-SG	GCP	PLR	M-R													PLANNED OBSOLESCENCE	SEE 33482-6262	34950-1210	34950-1220
KEY C, DARK GRAY	33482-1263	C-DG	GCP	PLR	M-R	1	2	3	4	5	6	7	8	9	10	11	12	PLANNED OBSOLESCENCE	SEE 33482-6263	34950-1210	34950-1220
KEY D, STONE GRAY	33482-1264	D-SG	GCP	PLR	M-R	1	2	3	4	5	6	7	8	9	10	11	12	PLANNED OBSOLESCENCE	SEE 33482-6264	34950-1210	34950-1220
KEY A, BLACK	33482-1265	A-BLK	GCP	PLR	M-R						6	7	8	9	10	11		PLANNED OBSOLESCENCE	SEE 33482-6265	34950-1210	34950-1220
KEY A, BLACK	33482-1266	A-BLK	GCP	PLR	M-R	1	2	3	4	5	6	7					12	PLANNED OBSOLESCENCE	SEE 33482-6266	34950-1210	34950-1220
KEY A, BLACK	33482-1267	A-BLK	GCP	PLR	M-R			3	4	5	6	7						PLANNED OBSOLESCENCE	SEE 33482-6267	34950-1210	34950-1220
KEY A, BLACK	33482-1268	A-BLK	GCP	PLR	M-R			3	4	5	6	7	8	9	10	11		PLANNED OBSOLESCENCE	SEE 33482-6268	34950-1210	34950-1220
KEY A, BLACK	33482-1269	A-BLK	GCP	PLR	M-R	1	2	3	4	5			8	9	10	11	12	PLANNED OBSOLESCENCE	SEE 33482-6269	34950-1210	34950-1220
KEY A, BLACK	33482-1270	A-BLK	GCP	PLR	M-R		2		4			7	8	9	10			PLANNED OBSOLESCENCE	SEE 33482-6270	34950-1210	34950-1220
KEY A, BLACK	33482-1271	A-BLK	GCP	PLR	M-R		2					7	8	9				PLANNED OBSOLESCENCE	SEE 33482-6271	34950-1210	34950-1220
KEY A, BLACK	33482-1272	A-BLK	GCP	PLR	M-R		2					7	8	9	10			PLANNED OBSOLESCENCE	SEE 33482-6272	34950-1210	34950-1220
KEY A, BLACK	33482-1273	A-BLK	GCP	PLR	M-R								8					PLANNED OBSOLESCENCE	SEE 33482-6273	34950-1210	34950-1220
KEY A, BLACK	33482-1274	A-BLK	GCP	PLR	M-R	1		3	4	5	6		8		10	11	12	PLANNED OBSOLESCENCE	SEE 33482-6274	34950-1210	34950-1220
KEY A, BLACK	33482-1275	A-BLK	GCP	PLR	M-R				4				8		10			PLANNED OBSOLESCENCE	SEE 33482-6275	34950-1210	34950-1220
KEY A, BLACK	33482-1276	A-BLK	GCP	PLR	M-R	1	2	3	4		6		8		10	11	12	PLANNED OBSOLESCENCE	SEE 33482-6276	34950-1210	34950-1220
KEY A, BLACK	33482-1277	A-BLK	GCP	PLR	M-R	1	2	3								11	12	PLANNED OBSOLESCENCE	SEE 33482-6277	34950-1210	34950-1220
KEY A, BLACK	33482-1278	A-BLK	GCP	PLR	M-R						6						12	PLANNED OBSOLESCENCE	SEE 33482-6278	34950-1210	34950-1220
KEY A, BLACK	33482-1279	A-BLK	GCP	PLR	M-R	1	2	3	4	5		7	8	9	10	11		PLANNED OBSOLESCENCE	SEE 33482-6279	34950-1210	34950-1220
KEY A, BLACK	33482-1280	A-BLK	GCP	PLR	M-R	1	2	3	4	5	6			9				PLANNED OBSOLESCENCE	SEE 33482-6280	34950-1210	34950-1220
KEY A, BLACK	33482-1281	A-BLK	GCP	PLR	M-R		2		4		6		8		10	11		PLANNED OBSOLESCENCE	SEE 33482-6281	34950-1210	34950-1220
KEY A, BLACK	33482-1282	A-BLK	GCP	PLR	M-R	1	2	3	4	5	6			9	10	11	12	PLANNED OBSOLESCENCE	SEE 33482-6282	34950-1210	34950-1220
KEY A, BLACK	33482-1283	A-BLK	GCP	PLR	M-R						6			9	10	11	12	PLANNED OBSOLESCENCE	SEE 33482-6283	34950-1210	34950-1220
KEY A, BLACK	33482-1284	A-BLK	GCP	PLR	M-R	1		3	4	5	6	7	8		10	11	12	PLANNED OBSOLESCENCE	SEE 33482-6284	34950-1210	34950-1220
KEY D, STONE GRAY	33482-1285	D-SG	GCP	PLR	M-R	1					6	7						PLANNED OBSOLESCENCE	SEE 33482-6285	34950-1210	34950-1220
KEY A, BLACK	33482-1286	A-BLK	GCP	PLR	M-R		2	3					8	9				PLANNED OBSOLESCENCE	SEE 33482-6286	34950-1210	34950-1220
KEY A, BLACK	33482-1287	A-BLK	GCP	PLR	M-R	1						7						PLANNED OBSOLESCENCE	SEE 33482-6287	34950-1210	34950-1220
KEY A, BLACK	33482-1288	A-BLK	GCP	PLR	M-R	1					6							PLANNED OBSOLESCENCE	SEE 33482-6288	34950-1210	34950-1220
KEY A, BLACK	33482-1289	A-BLK	GCP	PLR	M-R	1	2	3	4	5	6		8					PLANNED OBSOLESCENCE	SEE 33482-6289	34950-1210	34950-1220
KEY A, BLACK	33482-1290	A-BLK	GCP	PLR	M-R	1						7					12	PLANNED OBSOLESCENCE	SEE 33482-6290	34950-1210	34950-1220
KEY A, BLACK	33482-1291	A-BLK	GCP	PLR	M-R	1	2	3	4	5	6	7	8				12	PLANNED OBSOLESCENCE	SEE 33482-6291	34950-1210	34950-1220
KEY A, BLACK	33482-1292	A-BLK	GCP	PLR	M-R									9				PLANNED OBSOLESCENCE	SEE 33482-6292	34950-1210	34950-1220
KEY A, BLACK	33482-1293	A-BLK	GCP	PLR	M-R			3	4					9	10	11	12	PLANNED OBSOLESCENCE	SEE 33482-6293	34950-1210	34950-1220
KEY A, BLACK	33482-1294	A-BLK	GCP	PLR	M-R	1	2			5	6	7	8					PLANNED OBSOLESCENCE	SEE 33482-6294	34950-1210	34950-1220
KEY A, BLACK	33482-1295	A-BLK	GCP	PLR	M-R	1	2			5	6	7	8			11	12	PLANNED OBSOLESCENCE	SEE 33482-6295	34950-1210	34950-1220
KEY A, BLACK	33482-1296	A-BLK	GCP	PLR	M-R	1	2	3	4	5	6	7	8	9	10			PLANNED OBSOLESCENCE	SEE 33482-6296	34950-1210	34950-1220
KEY A, BLACK	33482-1297	A-BLK	GCP	PLR	M-R				4		6				10	11	12	PLANNED OBSOLESCENCE	SEE 33482-6297	34950-1210	34950-1220
KEY A, BLACK	33482-1298	A-BLK	GCP	PLR	M-R						6					11	12	PLANNED OBSOLESCENCE	SEE 33482-6298	34950-1210	34950-1220
KEY A, BLACK	33482-1299	A-BLK	GCP	PLR	M-R	1	2					7	8					PLANNED OBSOLESCENCE	SEE 33482-6299	34950-1210	34950-1220
KEY A, BLACK	33482-1300	A-BLK	GCP	PLR	M-R	1	2	3					8		10	11	12	PLANNED OBSOLESCENCE	SEE 33482-6300	34950-1210	34950-1220
KEY A, BLACK	33482-1301	A-BLK	GCP	PLR	M-R	1	2					7	8				12	PLANNED OBSOLESCENCE	SEE 33482-6301	34950-1210	34950-1220
KEY B, LIGHT GRAY	33482-1302	B-LG	GCP	PLR	M-R										10	11		PLANNED OBSOLESCENCE	SEE 33482-6302	34950-1210	34950-1220
KEY A, BLACK	33482-1303	A-BLK	GCP	PLR	M-R	1	2	3	4			7	8	9	10		12	PLANNED OBSOLESCENCE	SEE 33482-6303	34950-1210	34950-1220
KEY A, BLACK	33482-1304	A-BLK	GCP	PLR	M-R	1	2	3	4			7	8	9	10			PLANNED OBSOLESCENCE	SEE 33482-6304	34950-1210	34950-1220
KEY B, LIGHT GRAY	33482-1305	B-LG	GCP	PLR	M-R										10	11	12	PLANNED OBSOLESCENCE	SEE 33482-6305	34950-1210	34950-1220
KEY B, LIGHT GRAY	33482-1306	B-LG	GCP	PLR	M-R	1	2	3	4	5	6	7			10	11	12	PLANNED OBSOLESCENCE	SEE 33482-6306	34950-1210	34950-1220
KEY A, BLACK	33482-1307	A-BLK	GCP	PLR	M-R	1	2	3	4	5		7	8					PLANNED OBSOLESCENCE	SEE 33482-6307	34950-1210	34950-1220
KEY A, BLACK	33482-1308	A-BLK	GCP	PLR	M-R							7	8	9	10	11	12	PLANNED OBSOLESCENCE	SEE 33482-6308	34950-1210	34950-1220
KEY A, BLACK	33482-1309	A-BLK	GCP	PLR	M-R	1							8		10	11		PLANNED OBSOLESCENCE	SEE 33482-6309	34950-1210	34950-1220
KEY A, BLACK	33482-1310	A-BLK	GCP	PLR	M-R	1			4							11		PLANNED OBSOLESCENCE	SEE 33482-6310	34950-1210	34950-1220
KEY A, BLACK	33482-1311	A-BLK	GCP	PLR	M-R	1	2		4	5	6	7		9	10	11	12	PLANNED OBSOLESCENCE	SEE 33482-6311	34950-1210	34950-1220
KEY A, BLACK	33482-1312	A-BLK	GCP	PLR	M-R								8	9				PLANNED OBSOLESCENCE	SEE 33482-6312	34950-1210	34950-1220
KEY A, BLACK	33482-1313	A-BLK	GCP	PLR	M-R			3	4	5	6		8	9	10	11		PLANNED OBSOLESCENCE	SEE 33482-6313	34950-1210	34950-1220
KEY A, BLACK	33482-1314	A-BLK	GCP	PLR	M-R			3			6	7	8	9	10			PLANNED OBSOLESCENCE	SEE 33482-6314	34950-1210	34950-1220
KEY A, BLACK	33482-1315	A-BLK	GCP	PLR	M-R						6	7	8	9				PLANNED OBSOLESCENCE	SEE 33482-6315	34950-1210	34950-1220
KEY A, BLACK	33482-1316	A-BLK	GCP	PLR	M-R					5	6	7	8			11		PLANNED OBSOLESCENCE	SEE 33482-6316	34950-1210	34950-1220
KEY A, BLACK	33482-1317	A-BLK	GCP	PLR	M-R	1	2											PLANNED OBSOLESCENCE	SEE 33482-6317	34950-1210	34950-1220
KEY A, BLACK	33482-1318	A-BLK	GCP	PLR	M-R	1	2	3	4	5	6	7	8					PLANNED OBSOLESCENCE	SEE 33482-6318	34950-1210	34950-1220
KEY A, BLACK	33482-1319	A-BLK	GCP	PLR	M-R	1	2	3	4	5	6	7	8	9				PLANNED OBSOLESCENCE	SEE 33482-6319	34950-1210	34950-1220
KEY C, DARK GRAY	33482-1320	C-DG	GCP	PLR	M-R	1					6	7						PLANNED OBSOLESCENCE	SEE 33482-6320	34950-1210	34950-1220
KEY C, BROWN	33482-1321	C-BR	GCP	PLR	M-R	1	2	3	4	5	6							PLANNED OBSOLESCENCE	SEE 33482-6321	34950-1210	34950-1220
KEY C, BROWN	33482-1322	C-BR	GCP	PLR	M-R	1	2			5	6							PLANNED OBSOLESCENCE	SEE 33482-6322	34950-1210	34950-1220
KEY A, BLACK	33482-1323	A-BLK	GCP	PLR	M-R			3				7		9	10	11	12	PLANNED OBSOLESCENCE	SEE 33482-6323	34950-1210	34950-1220
KEY A, BLACK	33482-1324	A-BLK	GCP	PLR	M-R			3						9	10	11	12	PLANNED OBSOLESCENCE	SEE 33482-6324	34950-1210	34950-1220
KEY A, BLACK	33482-1325	A-BLK	GCP	PLR	M-R			3						9				PLANNED OBSOLESCENCE	SEE 33482-6325	34950-1210	34950-1220
KEY A, BLACK	33482-1326	A-BLK	GCP	PLR	M-R					5	6	7			10	11		PLANNED OBSOLESCENCE	SEE 33482-6326	34950-1210	34950-1220
KEY A, BLACK	33482-1327	A-BLK	GCP	PLR	M-R							7				11		PLANNED OBSOLESCENCE	SEE 33482-6327	34950-1210	34950-1220
KEY C, DARK GRAY	33482-1328	C-DG	GCP	PLR	M-R	1	2	3	4	5	6							PLANNED OBSOLESCENCE	SEE 33482-6328	34950-1210	34950-1220
KEY C, DARK GRAY	33482-1329	C-DG	GCP	PLR	M-R	1	2			5	6							PLANNED OBSOLESCENCE	SEE 33482-6329	34950-1210	34950-1220
KEY A, BLACK	33482-1330	A-BLK	GCP	PLR	M-R	1	2	3	4					9	10	11	12	PLANNED OBSOLESCENCE	SEE 33482-6330	34950-1210	34950-1220
KEY A, BLACK	33482-1331	A-BLK	GCP	PLR	M-R	1	2				6	7	8				12	PLANNED OBSOLESCENCE	SEE 33482-6331	34950-1210	34950-1220
KEY A, BLACK	33482-1332	A-BLK	GCP	PLR	M-R				4	5		7	8	9	10			PLANNED OBSOLESCENCE	SEE 33482-6332	34950-1210	34950-1220
KEY A, BLACK	33482-1333	A-BLK	GCP	PLR	M-R				4					9	10			PLANNED OBSOLESCENCE	SEE 33482-6333	34950-1210	34950-1220

MX150 2X6 BLADE SEALED ASSY MAT SEAL
BOM AND PIN OUT SHEET

ASSEMBLY DESCRIPTION	ASSEMBLY PART NUMBER	COMPONENT				BLOCKED TERMINALS												STATUS	COMMENTS	OPTIONAL ATTATCHMENTS SOLD SEPERATELY	
		THE PRESENCE OF AN ABBREVIATION INDICATES THE PRESENCE OF THAT COMPONENT.				CAVITY WITH A NUMBER INDICATES BLOCKED TERMINAL POSITION CAVITY WITHOUT A NUMBER INDICATES OPEN TERMINAL POSITION															
		HOUSING KEY/COLOR	GROMMET CAP	PLR	MAT SEAL	1	2	3	4	5	6	7	8	9	10	11	12			BACKSHELL WITH RIBS	BACKSHELL WITHOUT RIBS
KEY A, BLACK	33482-1334	A-BLK	GCP	PLR	M-R				4	5			8		10			PLANNED OBSOLESCENCE	SEE 33482-6334	34950-1210	34950-1220
KEY A, BLACK	33482-1335	A-BLK	GCP	PLR	M-R	1	2		4	5	6	7					12	PLANNED OBSOLESCENCE	SEE 33482-6335	34950-1210	34950-1220
KEY A, YELLOW	33482-1336	A-YL	GCP	PLR	M-R													PLANNED OBSOLESCENCE	SEE 33482-6336	34950-1210	34950-1220
KEY B, LIGHT GRAY	33482-1337	B-LG	GCP	PLR	M-R					5			8					PLANNED OBSOLESCENCE	SEE 33482-6337	34950-1210	34950-1220
KEY B, LIGHT GRAY	33482-1338	B-LG	GCP	PLR	M-R					5			8			11	12	PLANNED OBSOLESCENCE	SEE 33482-6338	34950-1210	34950-1220
KEY B, LIGHT GRAY	33482-1339	B-LG	GCP	PLR	M-R			3	4	5			8	9	10	11	12	PLANNED OBSOLESCENCE	SEE 33482-6339	34950-1210	34950-1220
KEY B, LIGHT GRAY	33482-1340	B-LG	GCP	PLR	M-R	1	2	3	4	5			8	9	10	11	12	PLANNED OBSOLESCENCE	SEE 33482-6340	34950-1210	34950-1220
KEY A, BLACK	33482-1341	A-BLK	GCP	PLR	M-R	1	2	3		5				9		11		PLANNED OBSOLESCENCE	SEE 33482-6341	34950-1210	34950-1220
KEY A, BLACK	33482-1342	A-BLK	GCP	PLR	M-R		2	3		5						11		PLANNED OBSOLESCENCE	SEE 33482-6342	34950-1210	34950-1220
KEY A, BLACK	33482-1343	A-BLK	GCP	PLR	M-R	1	2	3						9		11		PLANNED OBSOLESCENCE	SEE 33482-6343	34950-1210	34950-1220
KEY A, BLACK	33482-1344	A-BLK	GCP	PLR	M-R	1	2	3	4	5				9		11	12	PLANNED OBSOLESCENCE	SEE 33482-6344	34950-1210	34950-1220
KEY A, BLACK	33482-1345	A-BLK	GCP	PLR	M-R		2	3	4	5						11	12	PLANNED OBSOLESCENCE	SEE 33482-6345	34950-1210	34950-1220
KEY A, BLACK	33482-1346	A-BLK	GCP	PLR	M-R	1												PLANNED OBSOLESCENCE	SEE 33482-6346	34950-1210	34950-1220
KEY A, BLACK	33482-1347	A-BLK	GCP	PLR	M-R	1	2	3										PLANNED OBSOLESCENCE	SEE 33482-6347	34950-1210	34950-1220
KEY B, LIGHT GRAY	33482-1348	B-LG	GCP	PLR	M-R	1	2	3	4		6					11	12	PLANNED OBSOLESCENCE	SEE 33482-6348	34950-1210	34950-1220
KEY A, BLACK	33482-1349	A-BLK	GCP	PLR	M-R				4			7	8					PLANNED OBSOLESCENCE	SEE 33482-6349	34950-1210	34950-1220
KEY A, BLACK	33482-1350	A-BLK	GCP	PLR	M-R		2						8					PLANNED OBSOLESCENCE	SEE 33482-6350	34950-1210	34950-1220
KEY A, BLACK	33482-1351	A-BLK	GCP	PLR	M-R		2		4				8		10			PLANNED OBSOLESCENCE	SEE 33482-6351	34950-1210	34950-1220
KEY A, BLACK	33482-1352	A-BLK	GCP	PLR	M-R	1	2	3	4	5	6		8		10	11	12	PLANNED OBSOLESCENCE	SEE 33482-6352	34950-1210	34950-1220
KEY A, BLACK	33482-1353	A-BLK	GCP	PLR	M-R	1					6	7	8				12	PLANNED OBSOLESCENCE	SEE 33482-6353	34950-1210	34950-1220
KEY A, BLACK	33482-1354	A-BLK	GCP	PLR	M-R		2	3	4		6		8		10	11	12	PLANNED OBSOLESCENCE	SEE 33482-6354	34950-1210	34950-1220
KEY A, BLACK	33482-1355	A-BLK	GCP	PLR	M-R		2				6	7	8		10	11		PLANNED OBSOLESCENCE	SEE 33482-6355	34950-1210	34950-1220
KEY A, BLACK	33482-1356	A-BLK	GCP	PLR	M-R	1	2	3	4		6				10	11	12	PLANNED OBSOLESCENCE	SEE 33482-6356	34950-1210	34950-1220
KEY A, BLACK	33482-1357	A-BLK	GCP	PLR	M-R					5			8					PLANNED OBSOLESCENCE	SEE 33482-6357	34950-1210	34950-1220
KEY A, BLACK	33482-1358	A-BLK	GCP	PLR	M-R				4						10			PLANNED OBSOLESCENCE	SEE 33482-6358	34950-1210	34950-1220
KEY A, BLACK	33482-1359	A-BLK	GCP	PLR	M-R				4			7	8	9	10	11	12	PLANNED OBSOLESCENCE	SEE 33482-6359	34950-1210	34950-1220
KEY A, BLACK	33482-1360	A-BLK	GCP	PLR	M-R					5	6		8	9	10	11	12	PLANNED OBSOLESCENCE	SEE 33482-6360	34950-1210	34950-1220
KEY A, BLACK	33482-1361	A-BLK	GCP	PLR	M-R				4	5	6		8	9	10	11	12	PLANNED OBSOLESCENCE	SEE 33482-6361	34950-1210	34950-1220
KEY A, BLACK	33482-1362	A-BLK	GCP	PLR	M-R	1	2	3		5	6	7	8	9		11	12	PLANNED OBSOLESCENCE	SEE 33482-6362	34950-1210	34950-1220
KEY A, BLACK	33482-1363	A-BLK	GCP	PLR	M-R				4	5		7	8	9	10	11	12	PLANNED OBSOLESCENCE	SEE 33482-6363	34950-1210	34950-1220
KEY A, BLACK	33482-1364	A-BLK	GCP	PLR	M-R				4			7		9	10			PLANNED OBSOLESCENCE	SEE 33482-6364	34950-1210	34950-1220
KEY A, BLACK	33482-1365	A-BLK	GCP	PLR	M-R						6	7	8	9	10	11	12	PLANNED OBSOLESCENCE	SEE 33482-6365	34950-1210	34950-1220
KEY A, BLACK	33482-1366	A-BLK	GCP	PLR	M-R	1	2				6	7				11	12	PLANNED OBSOLESCENCE	SEE 33482-6366	34950-1210	34950-1220
KEY A, BLACK	33482-1367	A-BLK	GCP	PLR	M-R					5			8		10			PLANNED OBSOLESCENCE	SEE 33482-6367	34950-1210	34950-1220
KEY A, BLACK	33482-1368	A-BLK	GCP	PLR	M-R	1	2	3	4			7	8	9	10	11	12	PLANNED OBSOLESCENCE	SEE 33482-6368	34950-1210	34950-1220
KEY A, BLACK	33482-1369	A-BLK	GCP	PLR	M-R				4									PLANNED OBSOLESCENCE	SEE 33482-6369	34950-1210	34950-1220
KEY A, BLACK	33482-1370	A-BLK	GCP	PLR	M-R	1	2	3			6	7			10	11	12	PLANNED OBSOLESCENCE	SEE 33482-6370	34950-1210	34950-1220
KEY A, BLACK	33482-1371	A-BLK	GCP	PLR	M-R							7	8			11		PLANNED OBSOLESCENCE	SEE 33482-6371	34950-1210	34950-1220
KEY A, BLACK	33482-1372	A-BLK	GCP	PLR	M-R	1		3		5			8		10		12	PLANNED OBSOLESCENCE	SEE 33482-6372	34950-1210	34950-1220
KEY A, BLACK	33482-1373	A-BLK	GCP	PLR	M-R		2		4		6	7		9		11		PLANNED OBSOLESCENCE	SEE 33482-6373	34950-1210	34950-1220
KEY A, BLACK	33482-1374	A-BLK	GCP	PLR	M-R		2								10	11	12	PLANNED OBSOLESCENCE	SEE 33482-6374	34950-1210	34950-1220
KEY A, BLACK	33482-1375	A-BLK	GCP	PLR	M-R							7		9	10			PLANNED OBSOLESCENCE	SEE 33482-6375	34950-1210	34950-1220
KEY A, BLACK	33482-1376	A-BLK	GCP	PLR	M-R		2		4			7						PLANNED OBSOLESCENCE	SEE 33482-6376	34950-1210	34950-1220
KEY A, BLACK	33482-1377	A-BLK	GCP	PLR	M-R	1	2	3	4		6			9	10	11	12	PLANNED OBSOLESCENCE	SEE 33482-6377	34950-1210	34950-1220
KEY A, BLACK	33482-1378	A-BLK	GCP	PLR	M-R	1		3		5						11	12	PLANNED OBSOLESCENCE	SEE 33482-6378	34950-1210	34950-1220
KEY A, BLACK	33482-1379	A-BLK	GCP	PLR	M-R	1		3		5			8		10	11	12	PLANNED OBSOLESCENCE	SEE 33482-6379	34950-1210	34950-1220
KEY A, BLACK	33482-1380	A-BLK	GCP	PLR	M-R		2					7	8					PLANNED OBSOLESCENCE	SEE 33482-6380	34950-1210	34950-1220
KEY A, BLACK	33482-1381	A-BLK	GCP	PLR	M-R		2		4			7	8					PLANNED OBSOLESCENCE	SEE 33482-6381	34950-1210	34950-1220
KEY A, BLACK	33482-1382	A-BLK	GCP	PLR	M-R				4	5	6		8		10	11		PLANNED OBSOLESCENCE	SEE 33482-6382	34950-1210	34950-1220
KEY A, BLACK	33482-1383	A-BLK	GCP	PLR	M-R	1	2	3	4			7	8	9	10	11		PLANNED OBSOLESCENCE	SEE 33482-6383	34950-1210	34950-1220
KEY A, BLACK	33482-1384	A-BLK	GCP	PLR	M-R			3	4					9	10			PLANNED OBSOLESCENCE	SEE 33482-6384	34950-1210	34950-1220
KEY A, BLACK	33482-1385	A-BLK	GCP	PLR	M-R			3	4							11	12	PLANNED OBSOLESCENCE	SEE 33482-6385	34950-1210	34950-1220
KEY A, BLACK	33482-1386	A-BLK	GCP	PLR	M-R	1	2	3	4		6	7	8	9	10	11		PLANNED OBSOLESCENCE	SEE 33482-6386	34950-1210	34950-1220
KEY A, BLACK	33482-1387	A-BLK	GCP	PLR	M-R	1	2	3	4	5	6	7	8	9			12	PLANNED OBSOLESCENCE	SEE 33482-6387	34950-1210	34950-1220
KEY A, BLACK	33482-1388	A-BLK	GCP	PLR	M-R	1	2	3							10	11	12	PLANNED OBSOLESCENCE	SEE 33482-6388	34950-1210	34950-1220
KEY A, BLACK	33482-1389	A-BLK	GCP	PLR	M-R	1	2	3			6					11	12	PLANNED OBSOLESCENCE	SEE 33482-6389	34950-1210	34950-1220
KEY A, BLACK	33482-1390	A-BLK	GCP	PLR	M-R	1		3	4							11		PLANNED OBSOLESCENCE	SEE 33482-6390	34950-1210	34950-1220
KEY A, BLACK	33482-1391	A-BLK	GCP	PLR	M-R	1	2	3			6				10	11	12	PLANNED OBSOLESCENCE	SEE 33482-6391	34950-1210	34950-1220
KEY A, BLACK	33482-1392	A-BLK	GCP	PLR	M-R	1		3	4							11	12	PLANNED OBSOLESCENCE	SEE 33482-6392	34950-1210	34950-1220
KEY A, BLACK	33482-1393	A-BLK	GCP	PLR	M-R				4	5		7				11	12	PLANNED OBSOLESCENCE	SEE 33482-6393	34950-1210	34950-1220
KEY B, LIGHT GRAY	33482-1394	B-LG	GCP	PLR	M-R	1	2	3	4				8	9	10	11	12	PLANNED OBSOLESCENCE	SEE 33482-6394	34950-1210	34950-1220
KEY B, LIGHT GRAY	33482-1395	B-LG	GCP	PLR	M-R	1	2	3	4				8	9	10			PLANNED OBSOLESCENCE	SEE 33482-6395	34950-1210	34950-1220
KEY A, BLACK	33482-1396	A-BLK	GCP	PLR	M-R	1					6	7	8	9	10			PLANNED OBSOLESCENCE	SEE 33482-6396	34950-1210	34950-1220
KEY A, BLACK	33482-1397	A-BLK	GCP	PLR	M-R				4		6		8					PLANNED OBSOLESCENCE	SEE 33482-6397	34950-1210	34950-1220
KEY A, BLACK	33482-1398	A-BLK	GCP	PLR	M-R				4	5	6	7				11	12	PLANNED OBSOLESCENCE	SEE 33482-6398	34950-1210	34950-1220
KEY A, BLACK	33482-1399	A-BLK	GCP	PLR	M-R	1	2	3	4	5	6	7	8			11	12	PLANNED OBSOLESCENCE	SEE 33482-6399	34950-1210	34950-1220
KEY A, BLACK	33482-1400	A-BLK	GCP	PLR	M-R	1	2	3				7	8					PLANNED OBSOLESCENCE	SEE 33482-6400	34950-1210	34950-1220
KEY A, BLACK	33482-1401	A-BLK	GCP	PLR	M-R	1	2	3				7	8	9	10			PLANNED OBSOLESCENCE	SEE 33482-6401	34950-1210	34950-1220
KEY A, BLACK	33482-1402	A-BLK	GCP	PLR	M-R				4	5	6		8					PLANNED OBSOLESCENCE	SEE 33482-6402	34950-1210	34950-1220
KEY A, BLACK	33482-1403	A-BLK	GCP	PLR	M-R					5	6	7	8	9	10	11	12	PLANNED OBSOLESCENCE	SEE 33482-6403	34950-1210	34950-1220
KEY A, BLACK	33482-1404	A-BLK	GCP	PLR	M-R					5	6	7	8				12	PLANNED OBSOLESCENCE	SEE 33482-6404	34950-1210	34950-1220
KEY A, BLACK	33482-1405	A-BLK	GCP	PLR	M-R							7	8				12	PLANNED OBSOLESCENCE	SEE 33482-6405	34950-1210	34950-1220
KEY A, BLACK	33482-1406	A-BLK	GCP	PLR	M-R		2	3		5	6	7		9	10	11	12	PLANNED OBSOLESCENCE	SEE 33482-6406	34950-1210	34950-1220
KEY A, BLACK	33482-1407	A-BLK	GCP	PLR	M-R			3							10	11	12	PLANNED OBSOLESCENCE	SEE 33482-6407	34950-1210	34950-1220
KEY A, BLACK	33482-1408	A-BLK	GCP	PLR	M-R				4	5	6	7	8		10	11	12	PLANNED OBSOLESCENCE	SEE 33482-6408	34950-1210	34950-1220
KEY A, BLACK	33482-1409	A-BLK	GCP	PLR	M-R			3	4	5	6	7	8		10	11	12	PLANNED OBSOLESCENCE	SEE 33482-6409	34950-1210	34950-1220
KEY A, BLACK	33482-1410	A-BLK	GCP	PLR	M-R	1	2	3	4				8	9				PLANNED OBSOLESCENCE	SEE 33482-6410	34950-1210	34950-1220
KEY A, BLACK	33482-1411	A-BLK	GCP	PLR	M-R		2	3						9				PLANNED OBSOLESCENCE	SEE 33482-6411	34950-1210	34950-1220
KEY A, BLACK	33482-1412	A-BLK	GCP	PLR	M-R								8		10	11		PLANNED OBSOLESCENCE	SEE 33482-6412	34950-1210	34950-1220

MX150 2X6 BLADE SEALED ASSY MAT SEAL
BOM AND PIN OUT SHEET

ASSEMBLY DESCRIPTION	ASSEMBLY PART NUMBER	COMPONENT				BLOCKED TERMINALS												STATUS	COMMENTS	OPTIONAL ATTATCHMENTS SOLD SEPERATELY	
		THE PRESENCE OF AN ABBREVIATION INDICATES THE PRESENCE OF THAT COMPONENT.				CAVITY WITH A NUMBER INDICATES BLOCKED TERMINAL POSITION CAVITY WITHOUT A NUMBER INDICATES OPEN TERMINAL POSITION															
		HOUSING KEY/COLOR	GROMMET CAP	PLR	MAT SEAL	1	2	3	4	5	6	7	8	9	10	11	12			BACKSHELL WITH RIBS	BACKSHELL WITHOUT RIBS
KEY A, BLACK	33482-1413	A-BLK	GCP	PLR	M-R	1		3		5						11		PLANNED OBSOLESCENCE	SEE 33482-6413	34950-1210	34950-1220
KEY A, BLACK	33482-1414	A-BLK	GCP	PLR	M-R	1		3		5			8		10	11		PLANNED OBSOLESCENCE	SEE 33482-6414	34950-1210	34950-1220
KEY A, BLACK	33482-1415	A-BLK	GCP	PLR	M-R		2	3		5	6	7		9		11	12	PLANNED OBSOLESCENCE	SEE 33482-6415	34950-1210	34950-1220
KEY A, BLACK	33482-1416	A-BLK	GCP	PLR	M-R	1			4	5	6		8		10		12	PLANNED OBSOLESCENCE	SEE 33482-6416	34950-1210	34950-1220
KEY A, BLACK	33482-1417	A-BLK	GCP	PLR	M-R	1			4	5			8		10		12	PLANNED OBSOLESCENCE	SEE 33482-6417	34950-1210	34950-1220
KEY A, BLACK	33482-1418	A-BLK	GCP	PLR	M-R	1	2	3	4	5			8		10	11	12	PLANNED OBSOLESCENCE	SEE 33482-6418	34950-1210	34950-1220
KEY A, BLACK	33482-1419	A-BLK	GCP	PLR	M-R		2	3		5	6	7		9	10	11	12	PLANNED OBSOLESCENCE	SEE 33482-6419	34950-1210	34950-1220
KEY A, BLACK	33482-1420	A-BLK	GCP	PLR	M-R	1	2	3	4				8	9				PLANNED OBSOLESCENCE	SEE 33482-6420	34950-1210	34950-1220
KEY A, BLACK	33482-1421	A-BLK	GCP	PLR	M-R		2	3						9				PLANNED OBSOLESCENCE	SEE 33482-6421	34950-1210	34950-1220
KEY A, BLACK	33482-1422	A-BLK	GCP	PLR	M-R								8		10	11		PLANNED OBSOLESCENCE	SEE 33482-6422	34950-1210	34950-1220
KEY A, BLACK	33482-1423	A-BLK	GCP	PLR	M-R	1		3		5						11		PLANNED OBSOLESCENCE	SEE 33482-6423	34950-1210	34950-1220
KEY A, BLACK	33482-1424	A-BLK	GCP	PLR	M-R	1		3		5			8		10	11		PLANNED OBSOLESCENCE	SEE 33482-6424	34950-1210	34950-1220
KEY A, BLACK	33482-1425	A-BLK	GCP	PLR	M-R		2		4		6	7	8	9	10	11	12	PLANNED OBSOLESCENCE	SEE 33482-6425	34950-1210	34950-1220
KEY A, BLACK	33482-1426	A-BLK	GCP	PLR	M-R			3	4							11	12	PLANNED OBSOLESCENCE	SEE 33482-6426	34950-1210	34950-1220
KEY A, BLACK	33482-1427	A-BLK	GCP	PLR	M-R			3	4					9	10	11	12	PLANNED OBSOLESCENCE	SEE 33482-6427	34950-1210	34950-1220
KEY A, BLACK	33482-1428	A-BLK	GCP	PLR	M-R	1	2			5	6	7	8	9	10			PLANNED OBSOLESCENCE	SEE 33482-6428	34950-1210	34950-1220
KEY A, BLACK	33482-1429	A-BLK	GCP	PLR	M-R									9	10			PLANNED OBSOLESCENCE	SEE 33482-6429	34950-1210	34950-1220
KEY A, BLACK	33482-1430	A-BLK	GCP	PLR	M-R			3	4	5	6		8	9				PLANNED OBSOLESCENCE	SEE 33482-6430	34950-1210	34950-1220
KEY B, LIGHT GRAY	33482-1431	B-LG	GCP	PLR	M-R	1	2	3	4				8			11	12	PLANNED OBSOLESCENCE	SEE 33482-6431	34950-1210	34950-1220
KEY B, LIGHT GRAY	33482-1432	B-LG	GCP	PLR	M-R	1	2	3	4				8					PLANNED OBSOLESCENCE	SEE 33482-6432	34950-1210	34950-1220
KEY A, BLACK	33482-1433	A-BLK	GCP	PLR	M-R										10	11	12	PLANNED OBSOLESCENCE	SEE 33482-6433	34950-1210	34950-1220
KEY B, LIGHT GRAY	33482-1434	B-LG	GCP	PLR	M-R							7	8	9			12	PLANNED OBSOLESCENCE	SEE 33482-6434	34950-1210	34950-1220
KEY A, BLACK	33482-1435	A-BLK	GCP	PLR	M-R							7	8	9	10	11	12	PLANNED OBSOLESCENCE	SEE 33482-6435	34950-1210	34950-1220
KEY A, BLACK	33482-1436	A-BLK	GCP	PLR	M-R		2						8	9	10	11	12	PLANNED OBSOLESCENCE	SEE 33482-6436	34950-1210	34950-1220
KEY A, BLACK	33482-1437	A-BLK	GCP	PLR	M-R		2						8	9				PLANNED OBSOLESCENCE	SEE 33482-6437	34950-1210	34950-1220
KEY A, BLACK	33482-6201	A-BLK	GCP	PLR	M-B													SALEABLE		34950-1210	34950-1220
KEY B, LIGHT GRAY	33482-6202	B-LG	GCP	PLR	M-B													SALEABLE		34950-1210	34950-1220
KEY C, BROWN	33482-6203	C-BR	GCP	PLR	M-B													NOT RECOMMENDED	SEE 33482-6261	34950-1210	34950-1220
KEY D, GREEN	33482-6204	D-GR	GCP	PLR	M-B													NOT RECOMMENDED	SEE 33482-6262	34950-1210	34950-1220
VOID KEY	33482-6205																				
KEY A, BLACK	33482-6206	A-BLK	GCP	PLR	M-B						6							SALEABLE		34950-1210	34950-1220
KEY B, LIGHT GRAY	33482-6207	B-LG	GCP	PLR	M-B						6							SALEABLE		34950-1210	34950-1220
KEY C, BROWN	33482-6208	C-BR	GCP	PLR	M-B						6							NOT RECOMMENDED		34950-1210	34950-1220
KEY D, GREEN	33482-6209	D-GR	GCP	PLR	M-B						6							NOT RECOMMENDED		34950-1210	34950-1220
VOID KEY	33482-6210																				
KEY A, BLACK	33482-6211	A-BLK	GCP	PLR	M-B						6	7						SALEABLE		34950-1210	34950-1220
KEY B, LIGHT GRAY	33482-6212	B-LG	GCP	PLR	M-B						6	7						SALEABLE		34950-1210	34950-1220
KEY C, BROWN	33482-6213	C-BR	GCP	PLR	M-B						6	7						NOT RECOMMENDED		34950-1210	34950-1220
KEY D, GREEN	33482-6214	D-GR	GCP	PLR	M-B						6	7						NOT RECOMMENDED		34950-1210	34950-1220
VOID KEY	33482-6215																				
KEY A, BLACK	33482-6216	A-BLK	GCP	PLR	M-B	1					6	7						SALEABLE		34950-1210	34950-1220
KEY B, LIGHT GRAY	33482-6217	B-LG	GCP	PLR	M-B	1					6	7						SALEABLE		34950-1210	34950-1220
KEY C, BROWN	33482-6218	C-BR	GCP	PLR	M-B	1					6	7						NOT RECOMMENDED	SEE 33482-6320	34950-1210	34950-1220
KEY D, GREEN	33482-6219	D-GR	GCP	PLR	M-B	1					6	7						NOT RECOMMENDED	SEE 33482-6285	34950-1210	34950-1220
VOID KEY	33482-6220																				
KEY A, BLACK	33482-6221	A-BLK	GCP	PLR	M-B	1					6	7					12	SALEABLE		34950-1210	34950-1220
KEY B, LIGHT GRAY	33482-6222	B-LG	GCP	PLR	M-B	1					6	7					12	SALEABLE		34950-1210	34950-1220
KEY C, BROWN	33482-6223	C-BR	GCP	PLR	M-B	1					6	7					12	NOT RECOMMENDED		34950-1210	34950-1220
KEY D, GREEN	33482-6224	D-GR	GCP	PLR	M-B	1					6	7					12	NOT RECOMMENDED		34950-1210	34950-1220
VOID KEY	33482-6225																				
KEY A, BLACK	33482-6226	A-BLK	GCP	PLR	M-B						6						12	SALEABLE		34950-1210	34950-1220
KEY A, BLACK	33482-6227	A-BLK	GCP	PLR	M-B	1	2	3	4	5	6	7	8	9	10	11	12	SALEABLE		34950-1210	34950-1220
KEY B, LIGHT GRAY	33482-6228	B-LG	GCP	PLR	M-B	1	2	3	4	5	6	7	8	9	10	11	12	SALEABLE		34950-1210	34950-1220
KEY C, BROWN	33482-6229	C-BR	GCP	PLR	M-B	1	2	3	4	5	6	7	8	9	10	11	12	NOT RECOMMENDED	SEE 33482-6263	34950-1210	34950-1220
KEY D, GREEN	33482-6230	D-GR	GCP	PLR	M-B	1	2	3	4	5	6	7	8	9	10	11	12	NOT RECOMMENDED	SEE 33482-6264	34950-1210	34950-1220
VOID KEY	33482-6231																				
KEY A, BLACK	33482-6232	A-BLK	GCP	PLR	M-B		2	3					8			11		SALEABLE		34950-1210	34950-1220
KEY A, BLACK	33482-6233	A-BLK	GCP	PLR	M-B		2	3		5	6	7	8			11		SALEABLE		34950-1210	34950-1220
KEY A, BLACK	33482-6234	A-BLK	GCP	PLR	M-B						6	7						SALEABLE		34950-1210	34950-1220
KEY A, BLACK	33482-6235	A-BLK	GCP	PLR	M-B		2	3			6	7	8		10	11		SALEABLE		34950-1210	34950-1220
KEY B, LIGHT GRAY	33482-6236	B-LG	GCP	PLR	M-B	1				5	6	7	8	9	10			SALEABLE		34950-1210	34950-1220
KEY A, BLACK	33482-6237	A-BLK	GCP	PLR	M-B		2											SALEABLE		34950-1210	34950-1220
KEY B, LIGHT GRAY	33482-6238	B-LG	GCP	PLR	M-B		2							9	10			SALEABLE		34950-1210	34950-1220
KEY A, BLACK	33482-6239	A-BLK	GCP	PLR	M-B	1				5	6	7	8					SALEABLE		34950-1210	34950-1220
KEY A, BLACK	33482-6240	A-BLK	GCP	PLR	M-B		2	3					8	9	10	11		SALEABLE		34950-1210	34950-1220
KEY A, BLACK	33482-6241	A-BLK	GCP	PLR	M-B							7	8	9	10	11		SALEABLE		34950-1210	34950-1220
KEY A, BLACK	33482-6242	A-BLK	GCP	PLR	M-B							7	8					SALEABLE		34950-1210	34950-1220
KEY A, BLACK	33482-6243	A-BLK	GCP	PLR	M-B		2							9	10			SALEABLE		34950-1210	34950-1220
KEY A, BLACK	33482-6244	A-BLK	GCP	PLR	M-B		2		4									SALEABLE		34950-1210	34950-1220
KEY A, BLACK	33482-6245	A-BLK	GCP	PLR	M-B									9	10	11	12	SALEABLE		34950-1210	34950-1220
KEY A, BLACK	33482-6246	A-BLK	GCP	PLR	M-B											11		SALEABLE		34950-1210	34950-1220
KEY A, BLACK	33482-6247	A-BLK	GCP	PLR	M-B		2	3	4			7	8					SALEABLE		34950-1210	34950-1220
KEY A, BLACK	33482-6248	A-BLK	GCP	PLR	M-B	1		3	4	5	6	7	8					SALEABLE		34950-1210	34950-1220
KEY A, BLACK	33482-6249	A-BLK	GCP	PLR	M-B										10	11	12	SALEABLE		34950-1210	34950-1220
KEY A, BLACK	33482-6250	A-BLK	GCP	PLR	M-B				4	5	6	7	8	9				SALEABLE		34950-1210	34950-1220
KEY A, BLACK	33482-6251	A-BLK	GCP	PLR	M-B		2		4	5			8		10	11		SALEABLE		34950-1210	34950-1220
KEY A, BLACK	33482-6252	A-BLK	GCP	PLR	M-B							7						SALEABLE		34950-1210	34950-1220
KEY A, BLACK	33482-6253	A-BLK	GCP	PLR	M-B		2	3	4	5	6	7	8		10	11	12	SALEABLE		34950-1210	34950-1220
KEY A, BLACK	33482-6254	A-BLK	GCP	PLR	M-B		2	3	4	5					10	11	12	SALEABLE		34950-1210	34950-1220

molex

MX150 2X6 BLADE SEALED ASSY MAT SEAL
BOM AND PIN OUT SHEET

ASSEMBLY DESCRIPTION	ASSEMBLY PART NUMBER	COMPONENT				BLOCKED TERMINALS												STATUS	COMMENTS	OPTIONAL ATTATCHMENTS SOLD SEPERATELY	
		THE PRESENCE OF AN ABBREVIATION INDICATES THE PRESENCE OF THAT COMPONENT.				CAVITY WITH A NUMBER INDICATES BLOCKED TERMINAL POSITION CAVITY WITHOUT A NUMBER INDICATES OPEN TERMINAL POSITION															
		HOUSING KEY/COLOR	GROMMET CAP	PLR	MAT SEAL	1	2	3	4	5	6	7	8	9	10	11	12			BACKSHELL WITH RIBS	BACKSHELL WITHOUT RIBS
KEY A, BLACK	33482-6255	A-BLK	GCP	PLR	M-B		2	3	4	5	6	7			10	11	12	SALEABLE		34950-1210	34950-1220
KEY A, BLACK	33482-6256	A-BLK	GCP	PLR	M-B	1					6	7		9				SALEABLE		34950-1210	34950-1220
KEY A, BLACK	33482-6257	A-BLK	GCP	PLR	M-B									9	10		12	SALEABLE		34950-1210	34950-1220
KEY A, BLACK	33482-6258	A-BLK	GCP	PLR	M-B		2	3								11		SALEABLE		34950-1210	34950-1220
KEY A, BLACK	33482-6259	A-BLK	GCP	PLR	M-B	1	2	3	4	5				9	10	11	12	SALEABLE		34950-1210	34950-1220
KEY A, BLACK	33482-6260	A-BLK	GCP	PLR	M-B											11	12	SALEABLE		34950-1210	34950-1220
KEY C, DARK GRAY	33482-6261	C-DG	GCP	PLR	M-B													SALEABLE		34950-1210	34950-1220
KEY D, STONE GRAY	33482-6262	D-SG	GCP	PLR	M-B													SALEABLE		34950-1210	34950-1220
KEY C, DARK GRAY	33482-6263	C-DG	GCP	PLR	M-B	1	2	3	4	5	6	7	8	9	10	11	12	SALEABLE		34950-1210	34950-1220
KEY D, STONE GRAY	33482-6264	D-SG	GCP	PLR	M-B	1	2	3	4	5	6	7	8	9	10	11	12	SALEABLE		34950-1210	34950-1220
KEY A, BLACK	33482-6265	A-BLK	GCP	PLR	M-B						6	7	8	9	10	11		SALEABLE		34950-1210	34950-1220
KEY A, BLACK	33482-6266	A-BLK	GCP	PLR	M-B	1	2	3	4	5	6	7					12	SALEABLE		34950-1210	34950-1220
KEY A, BLACK	33482-6267	A-BLK	GCP	PLR	M-B			3	4	5	6	7						SALEABLE		34950-1210	34950-1220
KEY A, BLACK	33482-6268	A-BLK	GCP	PLR	M-B			3	4	5	6	7	8	9	10	11		SALEABLE		34950-1210	34950-1220
KEY A, BLACK	33482-6269	A-BLK	GCP	PLR	M-B	1	2	3	4	5			8	9	10	11	12	SALEABLE		34950-1210	34950-1220
KEY A, BLACK	33482-6270	A-BLK	GCP	PLR	M-B		2		4			7	8	9	10			SALEABLE		34950-1210	34950-1220
KEY A, BLACK	33482-6271	A-BLK	GCP	PLR	M-B		2					7	8	9				SALEABLE		34950-1210	34950-1220
KEY A, BLACK	33482-6272	A-BLK	GCP	PLR	M-B		2					7	8	9	10			SALEABLE		34950-1210	34950-1220
KEY A, BLACK	33482-6273	A-BLK	GCP	PLR	M-B								8					SALEABLE		34950-1210	34950-1220
KEY A, BLACK	33482-6274	A-BLK	GCP	PLR	M-B	1		3	4	5	6		8		10	11	12	SALEABLE		34950-1210	34950-1220
KEY A, BLACK	33482-6275	A-BLK	GCP	PLR	M-B				4				8		10			SALEABLE		34950-1210	34950-1220
KEY A, BLACK	33482-6276	A-BLK	GCP	PLR	M-B	1	2	3	4		6		8		10	11	12	SALEABLE		34950-1210	34950-1220
KEY A, BLACK	33482-6277	A-BLK	GCP	PLR	M-B	1	2	3								11	12	SALEABLE		34950-1210	34950-1220
KEY A, BLACK	33482-6278	A-BLK	GCP	PLR	M-B						6						12	SALEABLE		34950-1210	34950-1220
KEY A, BLACK	33482-6279	A-BLK	GCP	PLR	M-B	1	2	3	4	5		7	8	9	10	11		SALEABLE		34950-1210	34950-1220
KEY A, BLACK	33482-6280	A-BLK	GCP	PLR	M-B	1	2	3	4	5	6			9				SALEABLE		34950-1210	34950-1220
KEY A, BLACK	33482-6281	A-BLK	GCP	PLR	M-B		2		4		6		8		10	11		SALEABLE		34950-1210	34950-1220
KEY A, BLACK	33482-6282	A-BLK	GCP	PLR	M-B	1	2	3	4	5	6			9	10	11	12	SALEABLE		34950-1210	34950-1220
KEY A, BLACK	33482-6283	A-BLK	GCP	PLR	M-B						6			9	10	11	12	SALEABLE		34950-1210	34950-1220
KEY A, BLACK	33482-6284	A-BLK	GCP	PLR	M-B	1		3	4	5	6	7	8		10	11	12	SALEABLE		34950-1210	34950-1220
KEY D, STONE GRAY	33482-6285	D-SG	GCP	PLR	M-B	1					6	7						SALEABLE		34950-1210	34950-1220
KEY A, BLACK	33482-6286	A-BLK	GCP	PLR	M-B		2	3					8	9				SALEABLE		34950-1210	34950-1220
KEY A, BLACK	33482-6287	A-BLK	GCP	PLR	M-B	1						7						SALEABLE		34950-1210	34950-1220
KEY A, BLACK	33482-6288	A-BLK	GCP	PLR	M-B	1					6							SALEABLE		34950-1210	34950-1220
KEY A, BLACK	33482-6289	A-BLK	GCP	PLR	M-B	1	2	3	4	5	6		8					SALEABLE		34950-1210	34950-1220
KEY A, BLACK	33482-6290	A-BLK	GCP	PLR	M-B	1						7					12	SALEABLE		34950-1210	34950-1220
KEY A, BLACK	33482-6291	A-BLK	GCP	PLR	M-B	1	2	3	4	5	6	7	8				12	SALEABLE		34950-1210	34950-1220
KEY A, BLACK	33482-6292	A-BLK	GCP	PLR	M-B									9				SALEABLE		34950-1210	34950-1220
KEY A, BLACK	33482-6293	A-BLK	GCP	PLR	M-B			3	4					9	10	11	12	SALEABLE		34950-1210	34950-1220
KEY A, BLACK	33482-6294	A-BLK	GCP	PLR	M-B	1	2			5	6	7	8					SALEABLE		34950-1210	34950-1220
KEY A, BLACK	33482-6295	A-BLK	GCP	PLR	M-B	1	2			5	6	7	8			11	12	SALEABLE		34950-1210	34950-1220
KEY A, BLACK	33482-6296	A-BLK	GCP	PLR	M-B	1	2	3	4	5	6	7	8	9	10			SALEABLE		34950-1210	34950-1220
KEY A, BLACK	33482-6297	A-BLK	GCP	PLR	M-B				4		6				10	11	12	SALEABLE		34950-1210	34950-1220
KEY A, BLACK	33482-6298	A-BLK	GCP	PLR	M-B						6					11	12	SALEABLE		34950-1210	34950-1220
KEY A, BLACK	33482-6299	A-BLK	GCP	PLR	M-B	1	2					7	8					SALEABLE		34950-1210	34950-1220
KEY A, BLACK	33482-6300	A-BLK	GCP	PLR	M-B	1	2	3					8		10	11	12	SALEABLE		34950-1210	34950-1220
KEY A, BLACK	33482-6301	A-BLK	GCP	PLR	M-B	1	2					7	8				12	SALEABLE		34950-1210	34950-1220
KEY B, LIGHT GRAY	33482-6302	B-LG	GCP	PLR	M-B										10	11		SALEABLE		34950-1210	34950-1220
KEY A, BLACK	33482-6303	A-BLK	GCP	PLR	M-B	1	2	3	4			7	8	9	10		12	SALEABLE		34950-1210	34950-1220
KEY A, BLACK	33482-6304	A-BLK	GCP	PLR	M-B	1	2	3	4			7	8	9	10			SALEABLE		34950-1210	34950-1220
KEY B, LIGHT GRAY	33482-6305	B-LG	GCP	PLR	M-B										10	11	12	SALEABLE		34950-1210	34950-1220
KEY B, LIGHT GRAY	33482-6306	B-LG	GCP	PLR	M-B	1	2	3	4	5	6	7			10	11	12	SALEABLE		34950-1210	34950-1220
KEY A, BLACK	33482-6307	A-BLK	GCP	PLR	M-B	1	2	3	4	5		7	8					SALEABLE		34950-1210	34950-1220
KEY A, BLACK	33482-6308	A-BLK	GCP	PLR	M-B							7	8	9	10	11	12	SALEABLE		34950-1210	34950-1220
KEY A, BLACK	33482-6309	A-BLK	GCP	PLR	M-B	1							8		10	11		SALEABLE		34950-1210	34950-1220
KEY A, BLACK	33482-6310	A-BLK	GCP	PLR	M-B	1			4							11		SALEABLE		34950-1210	34950-1220
KEY A, BLACK	33482-6311	A-BLK	GCP	PLR	M-B	1	2		4	5	6	7		9	10	11	12	SALEABLE		34950-1210	34950-1220
KEY A, BLACK	33482-6312	A-BLK	GCP	PLR	M-B								8	9				SALEABLE		34950-1210	34950-1220
KEY A, BLACK	33482-6313	A-BLK	GCP	PLR	M-B			3	4	5	6		8	9	10	11		SALEABLE		34950-1210	34950-1220
KEY A, BLACK	33482-6314	A-BLK	GCP	PLR	M-B			3			6	7	8	9	10			SALEABLE		34950-1210	34950-1220
KEY A, BLACK	33482-6315	A-BLK	GCP	PLR	M-B						6	7	8	9				SALEABLE		34950-1210	34950-1220
KEY A, BLACK	33482-6316	A-BLK	GCP	PLR	M-B					5	6	7	8			11		SALEABLE		34950-1210	34950-1220
KEY A, BLACK	33482-6317	A-BLK	GCP	PLR	M-B	1	2											SALEABLE		34950-1210	34950-1220
KEY A, BLACK	33482-6318	A-BLK	GCP	PLR	M-B	1	2	3	4	5	6	7	8					SALEABLE		34950-1210	34950-1220
KEY A, BLACK	33482-6319	A-BLK	GCP	PLR	M-B	1	2	3	4	5	6	7	8	9				SALEABLE		34950-1210	34950-1220
KEY C, DARK GRAY	33482-6320	C-DG	GCP	PLR	M-B	1					6	7						SALEABLE		34950-1210	34950-1220
KEY C, BROWN	33482-6321	C-BR	GCP	PLR	M-B	1	2	3	4	5	6							NOT RECOMMENDED	SEE 33482-6328	34950-1210	34950-1220
KEY C, BROWN	33482-6322	C-BR	GCP	PLR	M-B	1	2			5	6							NOT RECOMMENDED	SEE 33482-6329	34950-1210	34950-1220
KEY A, BLACK	33482-6323	A-BLK	GCP	PLR	M-B			3				7		9	10	11	12	SALEABLE		34950-1210	34950-1220
KEY A, BLACK	33482-6324	A-BLK	GCP	PLR	M-B			3						9	10	11	12	SALEABLE		34950-1210	34950-1220
KEY A, BLACK	33482-6325	A-BLK	GCP	PLR	M-B			3						9				SALEABLE		34950-1210	34950-1220
KEY A, BLACK	33482-6326	A-BLK	GCP	PLR	M-B					5	6	7			10	11		SALEABLE		34950-1210	34950-1220
KEY A, BLACK	33482-6327	A-BLK	GCP	PLR	M-B							7				11		SALEABLE		34950-1210	34950-1220
KEY C, DARK GRAY	33482-6328	C-DG	GCP	PLR	M-B	1	2	3	4	5	6							SALEABLE		34950-1210	34950-1220
KEY C, DARK GRAY	33482-6329	C-DG	GCP	PLR	M-B	1	2			5	6							SALEABLE		34950-1210	34950-1220
KEY A, BLACK	33482-6330	A-BLK	GCP	PLR	M-B	1	2	3	4					9	10	11	12	SALEABLE		34950-1210	34950-1220
KEY A, BLACK	33482-6331	A-BLK	GCP	PLR	M-B	1	2				6	7	8				12	SALEABLE		34950-1210	34950-1220
KEY A, BLACK	33482-6332	A-BLK	GCP	PLR	M-B				4	5		7	8	9	10			SALEABLE		34950-1210	34950-1220
KEY A, BLACK	33482-6333	A-BLK	GCP	PLR	M-B				4					9	10			SALEABLE		34950-1210	34950-1220

MX150 2X6 BLADE SEALED ASSY MAT SEAL
BOM AND PIN OUT SHEET

ASSEMBLY DESCRIPTION	ASSEMBLY PART NUMBER	COMPONENT				BLOCKED TERMINALS												STATUS	COMMENTS	OPTIONAL ATTATCHMENTS SOLD SEPERATELY	
		THE PRESENCE OF AN ABBREVIATION INDICATES THE PRESENCE OF THAT COMPONENT.				CAVITY WITH A NUMBER INDICATES BLOCKED TERMINAL POSITION CAVITY WITHOUT A NUMBER INDICATES OPEN TERMINAL POSITION															
		HOUSING KEY/COLOR	GROMMET CAP	PLR	MAT SEAL	1	2	3	4	5	6	7	8	9	10	11	12			BACKSHELL WITH RIBS	BACKSHELL WITHOUT RIBS
KEY A, BLACK	33482-6334	A-BLK	GCP	PLR	M-B				4	5			8		10			SALEABLE		34950-1210	34950-1220
KEY A, BLACK	33482-6335	A-BLK	GCP	PLR	M-B	1	2		4	5	6	7					12	SALEABLE		34950-1210	34950-1220
KEY A, YELLOW	33482-6336	A-YL	GCP	PLR	M-B													SALEABLE		34950-1210	34950-1220
KEY B, LIGHT GRAY	33482-6337	B-LG	GCP	PLR	M-B					5			8					SALEABLE		34950-1210	34950-1220
KEY B, LIGHT GRAY	33482-6338	B-LG	GCP	PLR	M-B					5			8			11	12	SALEABLE		34950-1210	34950-1220
KEY B, LIGHT GRAY	33482-6339	B-LG	GCP	PLR	M-B			3	4	5			8	9	10	11	12	SALEABLE		34950-1210	34950-1220
KEY B, LIGHT GRAY	33482-6340	B-LG	GCP	PLR	M-B	1	2	3	4	5			8	9	10	11	12	SALEABLE		34950-1210	34950-1220
KEY A, BLACK	33482-6341	A-BLK	GCP	PLR	M-B	1	2	3		5				9		11		SALEABLE		34950-1210	34950-1220
KEY A, BLACK	33482-6342	A-BLK	GCP	PLR	M-B		2	3		5						11		SALEABLE		34950-1210	34950-1220
KEY A, BLACK	33482-6343	A-BLK	GCP	PLR	M-B	1	2	3						9		11		SALEABLE		34950-1210	34950-1220
KEY A, BLACK	33482-6344	A-BLK	GCP	PLR	M-B	1	2	3	4	5				9		11	12	SALEABLE		34950-1210	34950-1220
KEY A, BLACK	33482-6345	A-BLK	GCP	PLR	M-B		2	3	4	5						11	12	SALEABLE		34950-1210	34950-1220
KEY A, BLACK	33482-6346	A-BLK	GCP	PLR	M-B	1												SALEABLE		34950-1210	34950-1220
KEY A, BLACK	33482-6347	A-BLK	GCP	PLR	M-B	1	2	3										SALEABLE		34950-1210	34950-1220
KEY B, LIGHT GRAY	33482-6348	B-LG	GCP	PLR	M-B	1	2	3	4		6					11	12	SALEABLE		34950-1210	34950-1220
KEY A, BLACK	33482-6349	A-BLK	GCP	PLR	M-B				4			7	8					SALEABLE		34950-1210	34950-1220
KEY A, BLACK	33482-6350	A-BLK	GCP	PLR	M-B		2						8					SALEABLE		34950-1210	34950-1220
KEY A, BLACK	33482-6351	A-BLK	GCP	PLR	M-B		2		4				8		10			SALEABLE		34950-1210	34950-1220
KEY A, BLACK	33482-6352	A-BLK	GCP	PLR	M-B	1	2	3	4	5	6		8		10	11	12	SALEABLE		34950-1210	34950-1220
KEY A, BLACK	33482-6353	A-BLK	GCP	PLR	M-B	1					6	7	8				12	SALEABLE		34950-1210	34950-1220
KEY A, BLACK	33482-6354	A-BLK	GCP	PLR	M-B		2	3	4		6		8		10	11	12	SALEABLE		34950-1210	34950-1220
KEY A, BLACK	33482-6355	A-BLK	GCP	PLR	M-B		2				6	7	8		10	11		SALEABLE		34950-1210	34950-1220
KEY A, BLACK	33482-6356	A-BLK	GCP	PLR	M-B	1	2	3	4		6				10	11	12	SALEABLE		34950-1210	34950-1220
KEY A, BLACK	33482-6357	A-BLK	GCP	PLR	M-B					5			8					SALEABLE		34950-1210	34950-1220
KEY A, BLACK	33482-6358	A-BLK	GCP	PLR	M-B				4						10			SALEABLE		34950-1210	34950-1220
KEY A, BLACK	33482-6359	A-BLK	GCP	PLR	M-B				4			7	8	9	10	11	12	SALEABLE		34950-1210	34950-1220
KEY A, BLACK	33482-6360	A-BLK	GCP	PLR	M-B					5	6		8	9	10	11	12	SALEABLE		34950-1210	34950-1220
KEY A, BLACK	33482-6361	A-BLK	GCP	PLR	M-B				4	5	6		8	9	10	11	12	SALEABLE		34950-1210	34950-1220
KEY A, BLACK	33482-6362	A-BLK	GCP	PLR	M-B	1	2	3		5	6	7	8	9		11	12	SALEABLE		34950-1210	34950-1220
KEY A, BLACK	33482-6363	A-BLK	GCP	PLR	M-B				4	5		7	8	9	10	11	12	SALEABLE		34950-1210	34950-1220
KEY A, BLACK	33482-6364	A-BLK	GCP	PLR	M-B				4			7		9	10			SALEABLE		34950-1210	34950-1220
KEY A, BLACK	33482-6365	A-BLK	GCP	PLR	M-B						6	7	8	9	10	11	12	SALEABLE		34950-1210	34950-1220
KEY A, BLACK	33482-6366	A-BLK	GCP	PLR	M-B	1	2				6	7				11	12	SALEABLE		34950-1210	34950-1220
KEY A, BLACK	33482-6367	A-BLK	GCP	PLR	M-B					5			8		10			SALEABLE		34950-1210	34950-1220
KEY A, BLACK	33482-6368	A-BLK	GCP	PLR	M-B	1	2	3	4			7	8	9	10	11	12	SALEABLE		34950-1210	34950-1220
KEY A, BLACK	33482-6369	A-BLK	GCP	PLR	M-B				4									SALEABLE		34950-1210	34950-1220
KEY A, BLACK	33482-6370	A-BLK	GCP	PLR	M-B	1	2	3			6	7			10	11	12	SALEABLE		34950-1210	34950-1220
KEY A, BLACK	33482-6371	A-BLK	GCP	PLR	M-B							7	8			11		SALEABLE		34950-1210	34950-1220
KEY A, BLACK	33482-6372	A-BLK	GCP	PLR	M-B	1		3		5			8		10		12	SALEABLE		34950-1210	34950-1220
KEY A, BLACK	33482-6373	A-BLK	GCP	PLR	M-B		2		4		6	7		9		11		SALEABLE		34950-1210	34950-1220
KEY A, BLACK	33482-6374	A-BLK	GCP	PLR	M-B		2								10	11	12	SALEABLE		34950-1210	34950-1220
KEY A, BLACK	33482-6375	A-BLK	GCP	PLR	M-B							7		9	10			SALEABLE		34950-1210	34950-1220
KEY A, BLACK	33482-6376	A-BLK	GCP	PLR	M-B		2		4			7						SALEABLE		34950-1210	34950-1220
KEY A, BLACK	33482-6377	A-BLK	GCP	PLR	M-B	1	2	3	4		6			9	10	11	12	SALEABLE		34950-1210	34950-1220
KEY A, BLACK	33482-6378	A-BLK	GCP	PLR	M-B	1		3		5						11	12	SALEABLE		34950-1210	34950-1220
KEY A, BLACK	33482-6379	A-BLK	GCP	PLR	M-B	1		3		5			8		10	11	12	SALEABLE		34950-1210	34950-1220
KEY A, BLACK	33482-6380	A-BLK	GCP	PLR	M-B		2					7	8					SALEABLE		34950-1210	34950-1220
KEY A, BLACK	33482-6381	A-BLK	GCP	PLR	M-B		2		4			7	8					SALEABLE		34950-1210	34950-1220
KEY A, BLACK	33482-6382	A-BLK	GCP	PLR	M-B				4	5	6		8		10	11		SALEABLE		34950-1210	34950-1220
KEY A, BLACK	33482-6383	A-BLK	GCP	PLR	M-B	1	2	3	4			7	8	9	10	11		SALEABLE		34950-1210	34950-1220
KEY A, BLACK	33482-6384	A-BLK	GCP	PLR	M-B			3	4					9	10			SALEABLE		34950-1210	34950-1220
KEY A, BLACK	33482-6385	A-BLK	GCP	PLR	M-B			3	4							11	12	SALEABLE		34950-1210	34950-1220
KEY A, BLACK	33482-6386	A-BLK	GCP	PLR	M-B	1	2	3	4		6	7	8	9	10	11		SALEABLE		34950-1210	34950-1220
KEY A, BLACK	33482-6387	A-BLK	GCP	PLR	M-B	1	2	3	4	5	6	7	8	9			12	SALEABLE		34950-1210	34950-1220
KEY A, BLACK	33482-6388	A-BLK	GCP	PLR	M-B	1	2	3							10	11	12	SALEABLE		34950-1210	34950-1220
KEY A, BLACK	33482-6389	A-BLK	GCP	PLR	M-B	1	2	3			6					11	12	SALEABLE		34950-1210	34950-1220
KEY A, BLACK	33482-6390	A-BLK	GCP	PLR	M-B	1		3	4							11		SALEABLE		34950-1210	34950-1220
KEY A, BLACK	33482-6391	A-BLK	GCP	PLR	M-B	1	2	3			6				10	11	12	SALEABLE		34950-1210	34950-1220
KEY A, BLACK	33482-6392	A-BLK	GCP	PLR	M-B	1		3	4							11	12	SALEABLE		34950-1210	34950-1220
KEY A, BLACK	33482-6393	A-BLK	GCP	PLR	M-B				4	5		7				11	12	SALEABLE		34950-1210	34950-1220
KEY B, LIGHT GRAY	33482-6394	B-LG	GCP	PLR	M-B	1	2	3	4				8	9	10	11	12	SALEABLE		34950-1210	34950-1220
KEY B, LIGHT GRAY	33482-6395	B-LG	GCP	PLR	M-B	1	2	3	4				8	9	10			SALEABLE		34950-1210	34950-1220
KEY A, BLACK	33482-6396	A-BLK	GCP	PLR	M-B	1					6	7	8	9	10			SALEABLE		34950-1210	34950-1220
KEY A, BLACK	33482-6397	A-BLK	GCP	PLR	M-B				4		6		8					SALEABLE		34950-1210	34950-1220
KEY A, BLACK	33482-6398	A-BLK	GCP	PLR	M-B				4	5	6	7				11	12	SALEABLE		34950-1210	34950-1220
KEY A, BLACK	33482-6399	A-BLK	GCP	PLR	M-B	1	2	3	4	5	6	7	8			11	12	SALEABLE		34950-1210	34950-1220
KEY A, BLACK	33482-6400	A-BLK	GCP	PLR	M-B	1	2	3				7	8					SALEABLE		34950-1210	34950-1220
KEY A, BLACK	33482-6401	A-BLK	GCP	PLR	M-B	1	2	3				7	8	9	10			SALEABLE		34950-1210	34950-1220
KEY A, BLACK	33482-6402	A-BLK	GCP	PLR	M-B				4	5	6		8					SALEABLE		34950-1210	34950-1220
KEY A, BLACK	33482-6403	A-BLK	GCP	PLR	M-B					5	6	7	8	9	10	11	12	SALEABLE		34950-1210	34950-1220
KEY A, BLACK	33482-6404	A-BLK	GCP	PLR	M-B					5	6	7	8				12	SALEABLE		34950-1210	34950-1220
KEY A, BLACK	33482-6405	A-BLK	GCP	PLR	M-B							7	8				12	SALEABLE		34950-1210	34950-1220
KEY A, BLACK	33482-6406	A-BLK	GCP	PLR	M-B		2	3		5	6	7		9	10	11	12	SALEABLE		34950-1210	34950-1220
KEY A, BLACK	33482-6407	A-BLK	GCP	PLR	M-B			3							10	11	12	SALEABLE		34950-1210	34950-1220
KEY A, BLACK	33482-6408	A-BLK	GCP	PLR	M-B				4	5	6	7	8		10	11	12	SALEABLE		34950-1210	34950-1220
KEY A, BLACK	33482-6409	A-BLK	GCP	PLR	M-B			3	4	5	6	7	8		10	11	12	SALEABLE		34950-1210	34950-1220
KEY A, BLACK	33482-6410	A-BLK	GCP	PLR	M-B	1	2	3	4				8	9				SALEABLE		34950-1210	34950-1220
KEY A, BLACK	33482-6411	A-BLK	GCP	PLR	M-B		2	3						9				SALEABLE		34950-1210	34950-1220
KEY A, BLACK	33482-6412	A-BLK	GCP	PLR	M-B								8		10	11		SALEABLE		34950-1210	34950-1220

molex

MX150 2X6 BLADE SEALED ASSY MAT SEAL
BOM AND PIN OUT SHEET

ASSEMBLY DESCRIPTION	ASSEMBLY PART NUMBER	COMPONENT				BLOCKED TERMINALS												STATUS	COMMENTS	OPTIONAL ATTATCHMENTS SOLD SEPERATELY	
		THE PRESENCE OF AN ABBREVIATION INDICATES THE PRESENCE OF THAT COMPONENT.				CAVITY WITH A NUMBER INDICATES BLOCKED TERMINAL POSITION CAVITY WITHOUT A NUMBER INDICATES OPEN TERMINAL POSITION															
		HOUSING KEY/COLOR	GROMMET CAP	PLR	MAT SEAL	1	2	3	4	5	6	7	8	9	10	11	12			BACKSHELL WITH RIBS	BACKSHELL WITHOUT RIBS
KEY A, BLACK	33482-6413	A-BLK	GCP	PLR	M-B	1		3		5						11		SALEABLE		34950-1210	34950-1220
KEY A, BLACK	33482-6414	A-BLK	GCP	PLR	M-B	1		3		5			8		10	11		SALEABLE		34950-1210	34950-1220
KEY A, BLACK	33482-6415	A-BLK	GCP	PLR	M-B		2	3		5	6	7		9		11	12	SALEABLE		34950-1210	34950-1220
KEY A, BLACK	33482-6416	A-BLK	GCP	PLR	M-B	1			4	5	6		8		10		12	SALEABLE		34950-1210	34950-1220
KEY A, BLACK	33482-6417	A-BLK	GCP	PLR	M-B	1			4	5			8		10		12	SALEABLE		34950-1210	34950-1220
KEY A, BLACK	33482-6418	A-BLK	GCP	PLR	M-B	1	2	3	4	5			8		10	11	12	SALEABLE		34950-1210	34950-1220
KEY A, BLACK	33482-6419	A-BLK	GCP	PLR	M-B		2	3		5	6	7		9	10	11	12	SALEABLE		34950-1210	34950-1220
KEY A, BLACK	33482-6420	A-BLK	GCP	PLR	M-B	1	2	3	4				8	9				SALEABLE		34950-1210	34950-1220
KEY A, BLACK	33482-6421	A-BLK	GCP	PLR	M-B		2	3						9				SALEABLE		34950-1210	34950-1220
KEY A, BLACK	33482-6422	A-BLK	GCP	PLR	M-B								8		10	11		SALEABLE		34950-1210	34950-1220
KEY A, BLACK	33482-6423	A-BLK	GCP	PLR	M-B	1		3		5						11		SALEABLE		34950-1210	34950-1220
KEY A, BLACK	33482-6424	A-BLK	GCP	PLR	M-B	1		3		5			8		10	11		SALEABLE		34950-1210	34950-1220
KEY A, BLACK	33482-6425	A-BLK	GCP	PLR	M-B		2		4		6	7	8	9	10	11	12	SALEABLE		34950-1210	34950-1220
KEY A, BLACK	33482-6426	A-BLK	GCP	PLR	M-B			3	4							11	12	SALEABLE		34950-1210	34950-1220
KEY A, BLACK	33482-6427	A-BLK	GCP	PLR	M-B			3	4					9	10	11	12	SALEABLE		34950-1210	34950-1220
KEY A, BLACK	33482-6428	A-BLK	GCP	PLR	M-B	1	2			5	6	7	8	9	10			SALEABLE		34950-1210	34950-1220
KEY A, BLACK	33482-6429	A-BLK	GCP	PLR	M-B									9	10			SALEABLE		34950-1210	34950-1220
KEY A, BLACK	33482-6430	A-BLK	GCP	PLR	M-B			3	4	5	6		8	9				SALEABLE		34950-1210	34950-1220
KEY B, LIGHT GRAY	33482-6431	B-LG	GCP	PLR	M-B	1	2	3	4				8			11	12	SALEABLE		34950-1210	34950-1220
KEY B, LIGHT GRAY	33482-6432	B-LG	GCP	PLR	M-B	1	2	3	4				8					SALEABLE		34950-1210	34950-1220
KEY A, BLACK	33482-6433	A-BLK	GCP	PLR	M-B										10	11	12	SALEABLE		34950-1210	34950-1220
KEY B, LIGHT GRAY	33482-6434	B-LG	GCP	PLR	M-B							7	8	9			12	SALEABLE		34950-1210	34950-1220
KEY A, BLACK	33482-6435	A-BLK	GCP	PLR	M-B							7	8	9	10	11	12	SALEABLE		34950-1210	34950-1220
KEY A, BLACK	33482-6436	A-BLK	GCP	PLR	M-B		2						8	9	10	11	12	SALEABLE		34950-1210	34950-1220
KEY A, BLACK	33482-6437	A-BLK	GCP	PLR	M-B		2						8	9				SALEABLE		34950-1210	34950-1220

molex

MX150 2X8 BLADE SEALED ASSY MAT SEAL
BOM AND PIN OUT SHEET

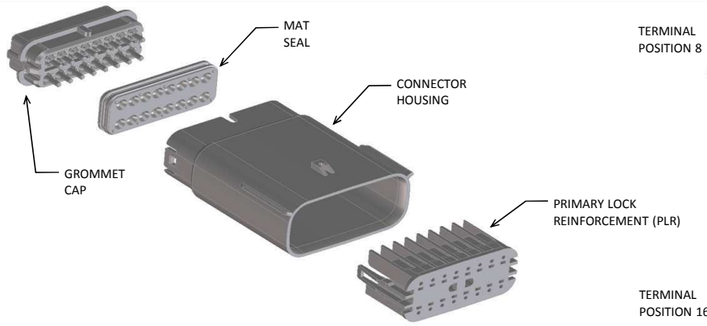

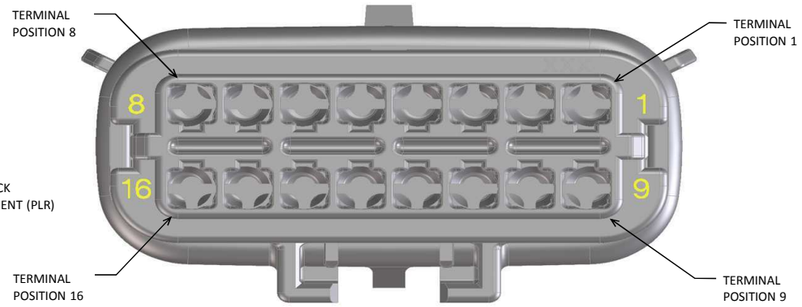

ABBREVIATION	DESCRIPTION	COLOR	MATERIAL
A-BLK	HOUSING, KEYING OPTION A	BLACK	SPS/NYLON GF20
B-LG	HOUSING, KEYING OPTION B	LIGHT GRAY	SPS/NYLON GF20
C-BR	HOUSING, KEYING OPTION C	BROWN	SPS/NYLON GF20
D-GR	HOUSING, KEYING OPTION D	GREEN	SPS/NYLON GF20
C-DG	HOUSING, KEYING OPTION C	DARK GRAY	SPS/NYLON GF20
D-SG	HOUSING, KEYING OPTION D	STONE GRAY	SPS/NYLON GF20
A-YW	HOUSING, KEYING OPTION A	YELLOW	SPS/NYLON GF20
GCP	GROMMET CAP (PLUGGED)	BLACK	SPS/NYLON GF20
PLR	PLR	NATURAL	SPS/NYLON GF20
M-R	MAT SEAL	RUST RED	INHERENTLY LUBRICATED SILICONE
M-B	MAT SEAL	ROYAL BLUE	INHERENTLY LUBRICATED SILICONE

FOR ADDITIONAL INFORMATION SEE SD-33482-0001

ASSEMBLY DESCRIPTION	ASSEMBLY PART NUMBER	COMPONENT				BLOCKED TERMINALS																STATUS	COMMENTS	OPTIONAL ATTATCHMENTS SOLD SEPERATELY	
		THE PRESENCE OF AN ABBREVIATION INDICATES THE PRESENCE OF THAT COMPONENT.				CAVITY WITH A NUMBER INDICATES BLOCKED TERMINAL POSITION CAVITY WITHOUT A NUMBER INDICATES OPEN TERMINAL POSITION																			
		HOUSING KEY/COLOR	GROMMET CAP	PLR	MAT SEAL	1	2	3	4	5	6	7	8	9	10	11	12	13	14	15	16			BACKSHELL WITH RIBS	BACKSHELL WITHOUT RIBS
KEY A, BLACK	33482-1601	A-BLK	GCP	PLR	M-R																	PLANNED OBSOLESCENCE	SEE 33482-8601		
KEY B, LIGHT GRAY	33482-1602	B-LG	GCP	PLR	M-R																	PLANNED OBSOLESCENCE	SEE 33482-8602		
KEY C, BROWN	33482-1603	C-BR	GCP	PLR	M-R																	PLANNED OBSOLESCENCE	SEE 33482-8603		
KEY D, GREEN	33482-1604	D-GR	GCP	PLR	M-R																	PLANNED OBSOLESCENCE	SEE 33482-8604		
VOID KEY	33482-1605																								
KEY A, BLACK	33482-1606	A-BLK	GCP	PLR	M-R								8									PLANNED OBSOLESCENCE	SEE 33482-8606		
KEY B, LIGHT GRAY	33482-1607	B-LG	GCP	PLR	M-R								8									PLANNED OBSOLESCENCE	SEE 33482-8607		
KEY C, BROWN	33482-1608	C-BR	GCP	PLR	M-R								8									PLANNED OBSOLESCENCE	SEE 33482-8608		
KEY D, GREEN	33482-1609	D-GR	GCP	PLR	M-R								8									PLANNED OBSOLESCENCE	SEE 33482-8609		
VOID KEY	33482-1610												8												
KEY A, BLACK	33482-1611	A-BLK	GCP	PLR	M-R								8	9								PLANNED OBSOLESCENCE	SEE 33482-8611		
KEY B, LIGHT GRAY	33482-1612	B-LG	GCP	PLR	M-R								8	9								PLANNED OBSOLESCENCE	SEE 33482-8612		
KEY C, BROWN	33482-1613	C-BR	GCP	PLR	M-R								8	9								PLANNED OBSOLESCENCE	SEE 33482-8613		
KEY D, GREEN	33482-1614	D-GR	GCP	PLR	M-R								8	9								PLANNED OBSOLESCENCE	SEE 33482-8614		
VOID KEY	33482-1615												8	9											
KEY A, BLACK	33482-1616	A-BLK	GCP	PLR	M-R	1							8	9								PLANNED OBSOLESCENCE	SEE 33482-8616		
KEY B, LIGHT GRAY	33482-1617	B-LG	GCP	PLR	M-R	1							8	9								PLANNED OBSOLESCENCE	SEE 33482-8617		
KEY C, BROWN	33482-1618	C-BR	GCP	PLR	M-R	1							8	9								PLANNED OBSOLESCENCE	SEE 33482-8618		
KEY D, GREEN	33482-1619	D-GR	GCP	PLR	M-R	1							8	9								PLANNED OBSOLESCENCE	SEE 33482-8619		
VOID KEY	33482-1620					1							8	9											
KEY A, BLACK	33482-1621	A-BLK	GCP	PLR	M-R	1	2	3	4	5	6	7	8	9	10	11	12	13	14	15	16	PLANNED OBSOLESCENCE	SEE 33482-8621		
KEY B, LIGHT GRAY	33482-1622	B-LG	GCP	PLR	M-R	1	2	3	4	5	6	7	8	9	10	11	12	13	14	15	16	PLANNED OBSOLESCENCE	SEE 33482-8622		
KEY C, BROWN	33482-1623	C-BR	GCP	PLR	M-R	1	2	3	4	5	6	7	8	9	10	11	12	13	14	15	16	PLANNED OBSOLESCENCE	SEE 33482-8623		
KEY D, GREEN	33482-1624	D-GR	GCP	PLR	M-R	1	2	3	4	5	6	7	8	9	10	11	12	13	14	15	16	PLANNED OBSOLESCENCE	SEE 33482-8624		
VOID KEY	33482-1625					1	2	3	4	5	6	7	8	9	10	11	12	13	14	15	16				
KEY A, BLACK	33482-1626	A-BLK	GCP	PLR	M-R															15		PLANNED OBSOLESCENCE	SEE 33482-8626		
KEY A, BLACK	33482-1627	A-BLK	GCP	PLR	M-R	1							8	9							16	PLANNED OBSOLESCENCE	SEE 33482-8627		
KEY B, LIGHT GRAY	33482-1628	B-LG	GCP	PLR	M-R	1							8	9							16	PLANNED OBSOLESCENCE	SEE 33482-8628		
KEY C, BROWN	33482-1629	C-BR	GCP	PLR	M-R	1							8	9							16	PLANNED OBSOLESCENCE	SEE 33482-8629		
KEY D, GREEN	33482-1630	D-GR	GCP	PLR	M-R	1							8	9							16	PLANNED OBSOLESCENCE	SEE 33482-8630		
VOID KEY	33482-1631					1							8	9							16				
KEY A, BLACK	33482-1632	A-BLK	GCP	PLR	M-R				4			7	8				12	13	14			PLANNED OBSOLESCENCE	SEE 33482-8632		
KEY A, BLACK	33482-1633	A-BLK	GCP	PLR	M-R			3	4	5					10	11	12	13	14	15	16	PLANNED OBSOLESCENCE	SEE 33482-8633		
KEY A, BLACK	33482-1634	A-BLK	GCP	PLR	M-R							7	8				12	13	14			PLANNED OBSOLESCENCE	SEE 33482-8634		
KEY B, LIGHT GRAY	33482-1635	B-LG	GCP	PLR	M-R								8					13	14	15	16	PLANNED OBSOLESCENCE	SEE 33482-8635		
KEY A, BLACK	33482-1636	A-BLK	GCP	PLR	M-R										10	11		13	14	15	16	PLANNED OBSOLESCENCE	SEE 33482-8636		
KEY A, BLACK	33482-1637	A-BLK	GCP	PLR	M-R										10	11				15	16	PLANNED OBSOLESCENCE	SEE 33482-8637		
KEY A, BLACK	33482-1638	A-BLK	GCP	PLR	M-R								8	9	10	11	12			15	16	PLANNED OBSOLESCENCE	SEE 33482-8638		
KEY A, BLACK	33482-1639	A-BLK	GCP	PLR	M-R															15		PLANNED OBSOLESCENCE	SEE 33482-8639		
KEY A, BLACK	33482-1640	A-BLK	GCP	PLR	M-R					5											16	PLANNED OBSOLESCENCE	SEE 33482-8640		
KEY A, BLACK	33482-1641	A-BLK	GCP	PLR	M-R					5												PLANNED OBSOLESCENCE	SEE 33482-8641		
KEY B, LIGHT GRAY	33482-1642	B-LG	GCP	PLR	M-R				4		6	7	8				12		14			PLANNED OBSOLESCENCE	SEE 33482-8642		
KEY A, BLACK	33482-1643	A-BLK	GCP	PLR	M-R															15	16	PLANNED OBSOLESCENCE	SEE 33482-8643		
KEY B, LIGHT GRAY	33482-1644	B-LG	GCP	PLR	M-R				4													PLANNED OBSOLESCENCE	SEE 33482-8644		
KEY B, LIGHT GRAY	33482-1645	B-LG	GCP	PLR	M-R				4		6	7	8									PLANNED OBSOLESCENCE	SEE 33482-8645		
KEY A, BLACK	33482-1646	A-BLK	GCP	PLR	M-R				4		6	7	8				12					PLANNED OBSOLESCENCE	SEE 33482-8646		
KEY A, BLACK	33482-1647	A-BLK	GCP	PLR	M-R																16	PLANNED OBSOLESCENCE	SEE 33482-8647		
KEY A, BLACK	33482-1648	A-BLK	GCP	PLR	M-R				4								12					PLANNED OBSOLESCENCE	SEE 33482-8648		
KEY B, LIGHT GRAY	33482-1649	B-LG	GCP	PLR	M-R																16	PLANNED OBSOLESCENCE	SEE 33482-8649		
KEY B, LIGHT GRAY	33482-1650	B-LG	GCP	PLR	M-R				4								12		14			PLANNED OBSOLESCENCE	SEE 33482-8650		
KEY B, LIGHT GRAY	33482-1651	B-LG	GCP	PLR	M-R														14			PLANNED OBSOLESCENCE	SEE 33482-8651		
KEY B, LIGHT GRAY	33482-1652	B-LG	GCP	PLR	M-R						6	7	8						14			PLANNED OBSOLESCENCE	SEE 33482-8652		
KEY A, BLACK	33482-1653	A-BLK	GCP	PLR	M-R									9						15		PLANNED OBSOLESCENCE	SEE 33482-8653		
KEY A, BLACK	33482-1654	A-BLK	GCP	PLR	M-R				4				8				12					PLANNED OBSOLESCENCE	SEE 33482-8654		
KEY B, LIGHT GRAY	33482-1655	B-LG	GCP	PLR	M-R				4				8				12		14			PLANNED OBSOLESCENCE	SEE 33482-8655		
KEY B, LIGHT GRAY	33482-1656	B-LG	GCP	PLR	M-R								8						14			PLANNED OBSOLESCENCE	SEE 33482-8656		
KEY A, BLACK	33482-1657	A-BLK	GCP	PLR	M-R	1						7										PLANNED OBSOLESCENCE	SEE 33482-8657		
KEY B, LIGHT GRAY	33482-1658	B-LG	GCP	PLR	M-R		2		4		6	7	8				12		14			PLANNED OBSOLESCENCE	SEE 33482-8658		
KEY B, LIGHT GRAY	33482-1659	B-LG	GCP	PLR	M-R		2				6	7	8						14			PLANNED OBSOLESCENCE	SEE 33482-8659		
KEY B, LIGHT GRAY	33482-1660	B-LG	GCP	PLR	M-R		2						8						14			PLANNED OBSOLESCENCE	SEE 33482-8660		
KEY A, BLACK	33482-1661	A-BLK	GCP	PLR	M-R		2		4				8				12					PLANNED OBSOLESCENCE	SEE 33482-8661		
KEY B, LIGHT GRAY	33482-1662	B-LG	GCP	PLR	M-R		2		4				8				12		14			PLANNED OBSOLESCENCE	SEE 33482-8662		
KEY A, BLACK	33482-1663	A-BLK	GCP	PLR	M-R		2						8									PLANNED OBSOLESCENCE	SEE 33482-8663		
KEY A, BLACK	33482-1664	A-BLK	GCP	PLR	M-R			3					8		10	11				15	16	PLANNED OBSOLESCENCE	SEE 33482-8664		

molex

MX150 2X8 BLADE SEALED ASSY MAT SEAL
BOM AND PIN OUT SHEET

ASSEMBLY DESCRIPTION	ASSEMBLY PART NUMBER	COMPONENT				BLOCKED TERMINALS																STATUS	COMMENTS	OPTIONAL ATTATCHMENTS SOLD SEPERATELY	
		THE PRESENCE OF AN ABBREVIATION INDICATES THE PRESENCE OF THAT COMPONENT.				CAVITY WITH A NUMBER INDICATES BLOCKED TERMINAL POSITION CAVITY WITHOUT A NUMBER INDICATES OPEN TERMINAL POSITION																			
		HOUSING KEY/COLOR	GROMMET CAP	PLR	MAT SEAL	1	2	3	4	5	6	7	8	9	10	11	12	13	14	15	16			BACKSHELL WITH RIBS	BACKSHELL WITHOUT RIBS
KEY A, BLACK	33482-1665	A-BLK	GCP	PLR	M-R			3	4	5	6	7	8		10	11				15	16	PLANNED OBSOLESCENCE	SEE 33482-8665		
KEY A, BLACK	33482-1666	A-BLK	GCP	PLR	M-R		2				6	7	8		10			13	14	15	16	PLANNED OBSOLESCENCE	SEE 33482-8666		
KEY A, BLACK	33482-1667	A-BLK	GCP	PLR	M-R		2			5	6				10			13	14	15	16	PLANNED OBSOLESCENCE	SEE 33482-8667		
KEY A, BLACK	33482-1668	A-BLK	GCP	PLR	M-R		2			5	6				10	11		13	14	15	16	PLANNED OBSOLESCENCE	SEE 33482-8668		
KEY A, BLACK	33482-1669	A-BLK	GCP	PLR	M-R		2				6				10			13	14			PLANNED OBSOLESCENCE	SEE 33482-8669		
KEY A, BLACK	33482-1670	A-BLK	GCP	PLR	M-R		2		4	5	6	7	8		10	11	12	13	14			PLANNED OBSOLESCENCE	SEE 33482-8670		
KEY A, BLACK	33482-1671	A-BLK	GCP	PLR	M-R		2		4	5	6				10		12	13	14			PLANNED OBSOLESCENCE	SEE 33482-8671		
KEY A, BLACK	33482-1672	A-BLK	GCP	PLR	M-R				4				8									PLANNED OBSOLESCENCE	SEE 33482-8672		
KEY A, BLACK	33482-1673	A-BLK	GCP	PLR	M-R		2				6	7	8									PLANNED OBSOLESCENCE	SEE 33482-8673		
KEY A, BLACK	33482-1674	A-BLK	GCP	PLR	M-R		2			5	6											PLANNED OBSOLESCENCE	SEE 33482-8674		
KEY A, BLACK	33482-1675	A-BLK	GCP	PLR	M-R		2			5	6					11						PLANNED OBSOLESCENCE	SEE 33482-8675		
KEY A, BLACK	33482-1676	A-BLK	GCP	PLR	M-R					5	6	7	8					13				PLANNED OBSOLESCENCE	SEE 33482-8676		
KEY A, BLACK	33482-1677	A-BLK	GCP	PLR	M-R					5	6	7	8			11		13				PLANNED OBSOLESCENCE	SEE 33482-8677		
KEY A, BLACK	33482-1678	A-BLK	GCP	PLR	M-R					5	6	7	8				12	13	14			PLANNED OBSOLESCENCE	SEE 33482-8678		
KEY A, BLACK	33482-1679	A-BLK	GCP	PLR	M-R					5	6	7	8			11	12	13	14			PLANNED OBSOLESCENCE	SEE 33482-8679		
KEY A, BLACK	33482-1680	A-BLK	GCP	PLR	M-R					5	6	7	8			11	12	13	14	15		PLANNED OBSOLESCENCE	SEE 33482-8680		
KEY A, BLACK	33482-1681	A-BLK	GCP	PLR	M-R							7								15		PLANNED OBSOLESCENCE	SEE 33482-8681		
KEY A, BLACK	33482-1682	A-BLK	GCP	PLR	M-R				4	5	6									15	16	PLANNED OBSOLESCENCE	SEE 33482-8682		
KEY A, BLACK	33482-1683	A-BLK	GCP	PLR	M-R			3	4	5	6									15	16	PLANNED OBSOLESCENCE	SEE 33482-8683		
KEY A, BLACK	33482-1684	A-BLK	GCP	PLR	M-R	1	2	3	4	5	6		8					13		15	16	PLANNED OBSOLESCENCE	SEE 33482-8684		
KEY A, BLACK	33482-1685	A-BLK	GCP	PLR	M-R													13	14	15	16	PLANNED OBSOLESCENCE	SEE 33482-8685		
KEY A, BLACK	33482-1686	A-BLK	GCP	PLR	M-R								8					13	14	15	16	PLANNED OBSOLESCENCE	SEE 33482-8686		
KEY A, BLACK	33482-1687	A-BLK	GCP	PLR	M-R							7	8			11	12	13	14	15		PLANNED OBSOLESCENCE	SEE 33482-8687		
KEY A, BLACK	33482-1688	A-BLK	GCP	PLR	M-R							7	8				12	13	14	15		PLANNED OBSOLESCENCE	SEE 33482-8688		
KEY A, BLACK	33482-1689	A-BLK	GCP	PLR	M-R							7	8			11		13				PLANNED OBSOLESCENCE	SEE 33482-8689		
KEY A, BLACK	33482-1690	A-BLK	GCP	PLR	M-R							7	8					13				PLANNED OBSOLESCENCE	SEE 33482-8690		
KEY A, BLACK	33482-1691	A-BLK	GCP	PLR	M-R					5								13				PLANNED OBSOLESCENCE	SEE 33482-8691		
KEY A, BLACK	33482-1692	A-BLK	GCP	PLR	M-R		2							9	10					15	16	PLANNED OBSOLESCENCE	SEE 33482-8692		
KEY A, BLACK	33482-1693	A-BLK	GCP	PLR	M-R		2								10					15		PLANNED OBSOLESCENCE	SEE 33482-8693		
KEY A, BLACK	33482-1694	A-BLK	GCP	PLR	M-R		2			5	6	7	8	9	10		12		14	15	16	PLANNED OBSOLESCENCE	SEE 33482-8694		
KEY A, BLACK	33482-1695	A-BLK	GCP	PLR	M-R		2			5	6	7	8		10		12		14	15		PLANNED OBSOLESCENCE	SEE 33482-8695		
KEY A, BLACK	33482-1700	A-BLK	GCP	PLR	M-R	1	2	3	4	5	6				10	11	12	13	14	15	16	PLANNED OBSOLESCENCE	SEE 33482-8700		
KEY A, BLACK	33482-1701	A-BLK	GCP	PLR	M-R	1	2	3	4	5	6					11	12	13	14	15	16	PLANNED OBSOLESCENCE	SEE 33482-8701		
KEY A, BLACK	33482-1702	A-BLK	GCP	PLR	M-R							7	8	9	10	11	12	13	14	15	16	PLANNED OBSOLESCENCE	SEE 33482-8702		
KEY A, BLACK	33482-1703	A-BLK	GCP	PLR	M-R								8	9	10	11	12	13	14	15	16	PLANNED OBSOLESCENCE	SEE 33482-8703		
KEY A, BLACK	33482-1704	A-BLK	GCP	PLR	M-R	1	2	3	4	5	6								14	15	16	PLANNED OBSOLESCENCE	SEE 33482-8704		
KEY A, BLACK	33482-1705	A-BLK	GCP	PLR	M-R										10	11	12	13	14	15	16	PLANNED OBSOLESCENCE	SEE 33482-8705		
KEY A, BLACK	33482-1706	A-BLK	GCP	PLR	M-R											11	12	13	14	15	16	PLANNED OBSOLESCENCE	SEE 33482-8706		
KEY A, BLACK	33482-1707	A-BLK	GCP	PLR	M-R							7	8	9	10							PLANNED OBSOLESCENCE	SEE 33482-8707		
KEY A, BLACK	33482-1708	A-BLK	GCP	PLR	M-R														14	15	16	PLANNED OBSOLESCENCE	SEE 33482-8708		
KEY A, BLACK	33482-1709	A-BLK	GCP	PLR	M-R												12	13	14	15	16	PLANNED OBSOLESCENCE	SEE 33482-8709		
KEY A, BLACK	33482-1710	A-BLK	GCP	PLR	M-R	1	2	3	4	5	6	7	8	9	10							PLANNED OBSOLESCENCE	SEE 33482-8710		
KEY B, LIGHT GRAY	33482-1711	B-LG	GCP	PLR	M-R	1	2	3	4	5	6	7	8	9	10		12		14	15	16	PLANNED OBSOLESCENCE	SEE 33482-8711		
KEY B, LIGHT GRAY	33482-1712	B-LG	GCP	PLR	M-R	1	2	3	4		6	7	8	9	10		12		14	15		PLANNED OBSOLESCENCE	SEE 33482-8712		
KEY A, BLACK	33482-1713	A-BLK	GCP	PLR	M-R		2	3	4					9	10					15	16	PLANNED OBSOLESCENCE	SEE 33482-8713		
KEY A, BLACK	33482-1714	A-BLK	GCP	PLR	M-R		2	3	4	5	6	7	8	9	10		12		14	15	16	PLANNED OBSOLESCENCE	SEE 33482-8714		
KEY A, BLACK	33482-1715	A-BLK	GCP	PLR	M-R	1	2	3	4			7	8	9	10	11	12			15	16	PLANNED OBSOLESCENCE	SEE 33482-8715		
KEY A, BLACK	33482-1716	A-BLK	GCP	PLR	M-R	1	2	3	4				8	9	10	11	12				16	PLANNED OBSOLESCENCE	SEE 33482-8716		
KEY A, BLACK	33482-1717	A-BLK	GCP	PLR	M-R	1	2	3	4	5	6	7	8					13	14	15	16	PLANNED OBSOLESCENCE	SEE 33482-8717		
KEY A, BLACK	33482-1718	A-BLK	GCP	PLR	M-R													13	14	15	16	PLANNED OBSOLESCENCE	SEE 33482-8718		
KEY A, BLACK	33482-1719	A-BLK	GCP	PLR	M-R	1				5		7	8		10	11			14	15		PLANNED OBSOLESCENCE	SEE 33482-8719		
KEY A, BLACK	33482-1720	A-BLK	GCP	PLR	M-R												12		14			PLANNED OBSOLESCENCE	SEE 33482-8720		
KEY B, LIGHT GRAY	33482-1721	B-LG	GCP	PLR	M-R				4		6	7	8			11	12	13	14			PLANNED OBSOLESCENCE	SEE 33482-8721		
KEY B, LIGHT GRAY	33482-1722	B-LG	GCP	PLR	M-R	1	2	3	4		6	7	8	9	10	11	12	13	14	15		PLANNED OBSOLESCENCE	SEE 33482-8722		
KEY A, BLACK	33482-1723	A-BLK	GCP	PLR	M-R	1	2	3	4	5	6			9				13	14	15	16	PLANNED OBSOLESCENCE	SEE 33482-8723		
KEY A, BLACK	33482-1724	A-BLK	GCP	PLR	M-R														14	15		PLANNED OBSOLESCENCE	SEE 33482-8724		
KEY C, DARK GRAY	33482-1725	C-DG	GCP	PLR	M-R																	PLANNED OBSOLESCENCE	SEE 33482-8725		
KEY D, STONE GRAY	33482-1726	D-SG	GCP	PLR	M-R																	PLANNED OBSOLESCENCE	SEE 33482-8726		
KEY C, DARK GRAY	33482-1727	C-DG	GCP	PLR	M-R	1	2	3	4	5	6	7	8	9	10	11	12	13	14	15	16	PLANNED OBSOLESCENCE	SEE 33482-8727		
KEY D, STONE GRAY	33482-1728	D-SG	GCP	PLR	M-R	1	2	3	4	5	6	7	8	9	10	11	12	13	14	15	16	PLANNED OBSOLESCENCE	SEE 33482-8728		
KEY A, BLACK	33482-1729	A-BLK	GCP	PLR	M-R								8	9			12	13	14	15	16	PLANNED OBSOLESCENCE	SEE 33482-8729		
KEY A, BLACK	33482-1730	A-BLK	GCP	PLR	M-R				4	5	6	7	8	9	10	11	12	13	14	15	16	PLANNED OBSOLESCENCE	SEE 33482-8730		
KEY A, BLACK	33482-1731	A-BLK	GCP	PLR	M-R									9	10	11	12	13	14	15	16	PLANNED OBSOLESCENCE	SEE 33482-8731		
KEY B, LIGHT GRAY	33482-1732	B-LG	GCP	PLR	M-R						6	7	8			11						PLANNED OBSOLESCENCE	SEE 33482-8732		
KEY B, LIGHT GRAY	33482-1733	B-LG	GCP	PLR	M-R	1	2	3	4	5	6			9	10	11	12	13	14	15	16	PLANNED OBSOLESCENCE	SEE 33482-8733		
KEY B, LIGHT GRAY	33482-1734	B-LG	GCP	PLR	M-R						6			9		11	12	13		15	16	PLANNED OBSOLESCENCE	SEE 33482-8734		
KEY A, BLACK	33482-1735	A-BLK	GCP	PLR	M-R						6				10	11	12	13	14			PLANNED OBSOLESCENCE	SEE 33482-8735		
KEY A, BLACK	33482-1736	A-BLK	GCP	PLR	M-R	1	2	3	4	5	6							13	14			PLANNED OBSOLESCENCE	SEE 33482-8736		
KEY A, BLACK	33482-1737	A-BLK	GCP	PLR	M-R	1	2	3	4	5	6				10	11	12	13	14			PLANNED OBSOLESCENCE	SEE 33482-8737		
KEY A, BLACK	33482-1738	A-BLK	GCP	PLR	M-R	1	2			5	6	7	8									PLANNED OBSOLESCENCE	SEE 33482-8738		
KEY A, BLACK	33482-1739	A-BLK	GCP	PLR	M-R			3	4							11	12					PLANNED OBSOLESCENCE	SEE 33482-8739		
KEY A, BLACK	33482-1740	A-BLK	GCP	PLR	M-R									9				13	14	15	16	PLANNED OBSOLESCENCE	SEE 33482-8740		
KEY A, BLACK	33482-1741	A-BLK	GCP	PLR	M-R			3	4					9	10	11	12	13	14	15	16	PLANNED OBSOLESCENCE	SEE 33482-8741		
KEY A, BLACK	33482-1742	A-BLK	GCP	PLR	M-R											11	12	13	14			PLANNED OBSOLESCENCE	SEE 33482-8742		
KEY A, BLACK	33482-1743	A-BLK	GCP	PLR	M-R											11			14			PLANNED OBSOLESCENCE	SEE 33482-8743		
KEY A, BLACK	33482-1744	A-BLK	GCP	PLR	M-R		2					7		9		11	12	13	14		16	PLANNED OBSOLESCENCE	SEE 33482-8744		
KEY A, BLACK	33482-1745	A-BLK	GCP	PLR	M-R		2							9			12	13	14			PLANNED OBSOLESCENCE	SEE 33482-8745		
KEY A, BLACK	33482-1746	A-BLK	GCP	PLR	M-R		2							9								PLANNED OBSOLESCENCE	SEE 33482-8746		
KEY A, BLACK	33482-1747	A-BLK	GCP	PLR	M-R												12	13	14		16	PLANNED OBSOLESCENCE	SEE 33482-8747		
KEY A, BLACK	33482-1748	A-BLK	GCP	PLR	M-R		2							9			12	13	14		16	PLANNED OBSOLESCENCE	SEE 33482-8748		
KEY A, BLACK	33482-1749	A-BLK	GCP	PLR	M-R	1									10	11	12	13	14		16	PLANNED OBSOLESCENCE	SEE 33482-8749		
KEY A, BLACK	33482-1750	A-BLK	GCP	PLR	M-R	1	2							9	10	11	12	13	14		16	PLANNED OBSOLESCENCE	SEE 33482-8750		
KEY C, DARK GRAY	33482-1751	C-DG	GCP	PLR	M-R								8									PLANNED OBSOLESCENCE	SEE 33482-8751		
KEY D, STONE GRAY	33482-1752	D-SG	GCP	PLR	M-R								8									PLANNED OBSOLESCENCE	SEE 33482-8752		
KEY C, DARK GRAY	33482-1753	C-DG	GCP	PLR	M-R								8	9								PLANNED OBSOLESCENCE	SEE 33482-8753		
KEY D, STONE GRAY	33482-1754	D-SG	GCP	PLR	M-R								8	9								PLANNED OBSOLESCENCE	SEE 33482-8754		
KEY C, DARK GRAY	33482-1755	C-DG	GCP	PLR	M-R	1							8	9								PLANNED OBSOLESCENCE	SEE 33482-8755		
KEY D, STONE GRAY	33482-1756	D-SG	GCP	PLR	M-R	1							8	9								PLANNED OBSOLESCENCE	SEE 33482-8756		
KEY C, DARK GRAY	33482-1757	C-DG	GCP	PLR	M-R	1							8	9							16	PLANNED OBSOLESCENCE	SEE 33482-8757		

molex

MX150 2X8 BLADE SEALED ASSY MAT SEAL
BOM AND PIN OUT SHEET

ASSEMBLY DESCRIPTION	ASSEMBLY PART NUMBER	COMPONENT				BLOCKED TERMINALS																STATUS	COMMENTS	OPTIONAL ATTATCHMENTS SOLD SEPERATELY	
		THE PRESENCE OF AN ABBREVIATION INDICATES THE PRESENCE OF THAT COMPONENT.				CAVITY WITH A NUMBER INDICATES BLOCKED TERMINAL POSITION CAVITY WITHOUT A NUMBER INDICATES OPEN TERMINAL POSITION																			
		HOUSING KEY/COLOR	GROMMET CAP	PLR	MAT SEAL	1	2	3	4	5	6	7	8	9	10	11	12	13	14	15	16			BACKSHELL WITH RIBS	BACKSHELL WITHOUT RIBS
KEY D, STONE GRAY	33482-1758	D-SG	GCP	PLR	M-R	1							8	9							16	PLANNED OBSOLESCENCE	SEE 33482-8758		
KEY A, BLACK	33482-1759	A-BLK	GCP	PLR	M-R	1	2	3	4	5			8	9	10	11	12	13	14		16	PLANNED OBSOLESCENCE	SEE 33482-8759		
KEY A, BLACK	33482-1760	A-BLK	GCP	PLR	M-R		2					7		9							16	PLANNED OBSOLESCENCE	SEE 33482-8760		
KEY A, BLACK	33482-1761	A-BLK	GCP	PLR	M-R		2			5				9								PLANNED OBSOLESCENCE	SEE 33482-8761		
KEY A, BLACK	33482-1762	A-BLK	GCP	PLR	M-R	1	2			5		7		9	10	11	12	13	14		16	PLANNED OBSOLESCENCE	SEE 33482-8762		
KEY A, BLACK	33482-1763	A-BLK	GCP	PLR	M-R							7									16	PLANNED OBSOLESCENCE	SEE 33482-8763		
KEY A, BLACK	33482-1764	A-BLK	GCP	PLR	M-R					5	6	7		9		11	12	13	14		16	PLANNED OBSOLESCENCE	SEE 33482-8764		
KEY A, BLACK	33482-1765	A-BLK	GCP	PLR	M-R		2			5		7		9			12	13	14		16	PLANNED OBSOLESCENCE	SEE 33482-8765		
KEY A, BLACK	33482-1766	A-BLK	GCP	PLR	M-R					5	6	7		9	10	11	12	13	14		16	PLANNED OBSOLESCENCE	SEE 33482-8766		
KEY A, BLACK	33482-1767	A-BLK	GCP	PLR	M-R					5	6	7		9							16	PLANNED OBSOLESCENCE	SEE 33482-8767		
KEY A, BLACK	33482-1768	A-BLK	GCP	PLR	M-R					5	6	7		9	10						16	PLANNED OBSOLESCENCE	SEE 33482-8768		
KEY A, BLACK	33482-1769	A-BLK	GCP	PLR	M-R	1			4	5	6		8				12	13	14		16	PLANNED OBSOLESCENCE	SEE 33482-8769		
KEY A, BLACK	33482-1770	A-BLK	GCP	PLR	M-R	1	2		4	5	6		8	9	10		12	13	14	15	16	PLANNED OBSOLESCENCE	SEE 33482-8770		
KEY A, BLACK	33482-1771	A-BLK	GCP	PLR	M-R	1			4		6	7	8		10			13	14	15		PLANNED OBSOLESCENCE	SEE 33482-8771		
KEY A, BLACK	33482-1772	A-BLK	GCP	PLR	M-R										10			13	14	15	16	PLANNED OBSOLESCENCE	SEE 33482-8772		
KEY A, BLACK	33482-1773	A-BLK	GCP	PLR	M-R	1	2	3	4	5	6					11	12					PLANNED OBSOLESCENCE	SEE 33482-8773		
KEY A, BLACK	33482-1774	A-BLK	GCP	PLR	M-R										10					15		PLANNED OBSOLESCENCE	SEE 33482-8774		
KEY A, BLACK	33482-1775	A-BLK	GCP	PLR	M-R									9	10					15	16	PLANNED OBSOLESCENCE	SEE 33482-8775		
KEY A, BLACK	33482-1776	A-BLK	GCP	PLR	M-R			3	4					9	10					15	16	PLANNED OBSOLESCENCE	SEE 33482-8776		
KEY A, YELLOW	33482-1777	A-YW	GCP	PLR	M-R																	PLANNED OBSOLESCENCE	SEE 33482-8777		
KEY A, BLACK	33482-1778	A-BLK	GCP	PLR	M-R					5			8									PLANNED OBSOLESCENCE	SEE 33482-8778		
KEY A, BLACK	33482-1779	A-BLK	GCP	PLR	M-R					5	6	7	8	9	10	11	12					PLANNED OBSOLESCENCE	SEE 33482-8779		
KEY A, BLACK	33482-1780	A-BLK	GCP	PLR	M-R			3	4	5	6							13	14			PLANNED OBSOLESCENCE	SEE 33482-8780		
KEY A, BLACK	33482-1781	A-BLK	GCP	PLR	M-R	1			4	5	6	7	8	9	10			13	14	15		PLANNED OBSOLESCENCE	SEE 33482-8781		
KEY A, BLACK	33482-1782	A-BLK	GCP	PLR	M-R	1			4		6	7	8		10	11	12	13	14	15		PLANNED OBSOLESCENCE	SEE 33482-8782		
KEY A, BLACK	33482-1783	A-BLK	GCP	PLR	M-R											11	12			15		PLANNED OBSOLESCENCE	SEE 33482-8783		
KEY A, BLACK	33482-1784	A-BLK	GCP	PLR	M-R			3														PLANNED OBSOLESCENCE	SEE 33482-8784		
KEY A, BLACK	33482-1785	A-BLK	GCP	PLR	M-R	1				5		7				11	12	13	14	15	16	PLANNED OBSOLESCENCE	SEE 33482-8785		
KEY A, BLACK	33482-1786	A-BLK	GCP	PLR	M-R		2			5		7		9		11	12	13	14	15	16	PLANNED OBSOLESCENCE	SEE 33482-8786		
KEY A, BLACK	33482-1787	A-BLK	GCP	PLR	M-R	1	2			5				9								PLANNED OBSOLESCENCE	SEE 33482-8787		
KEY A, BLACK	33482-1788	A-BLK	GCP	PLR	M-R	1	2					7		9		11	12	13	14	15	16	PLANNED OBSOLESCENCE	SEE 33482-8788		
KEY A, BLACK	33482-1789	A-BLK	GCP	PLR	M-R	1	2			5				9						15		PLANNED OBSOLESCENCE	SEE 33482-8789		
KEY A, BLACK	33482-1790	A-BLK	GCP	PLR	M-R	1	2			5		7		9		11	12	13	14	15	16	PLANNED OBSOLESCENCE	SEE 33482-8790		
KEY A, BLACK	33482-1791	A-BLK	GCP	PLR	M-R	1	2	3														PLANNED OBSOLESCENCE	SEE 33482-8791		
KEY A, BLACK	33482-1792	A-BLK	GCP	PLR	M-R					5		7									16	PLANNED OBSOLESCENCE	SEE 33482-8792		
KEY A, BLACK	33482-1793	A-BLK	GCP	PLR	M-R		2	3							10	11						PLANNED OBSOLESCENCE	SEE 33482-8793		
KEY A, BLACK	33482-1794	A-BLK	GCP	PLR	M-R	1	2	3		5	6						12	13				PLANNED OBSOLESCENCE	SEE 33482-8794		
KEY A, BLACK	33482-1795	A-BLK	GCP	PLR	M-R			3							10			13	14	15		PLANNED OBSOLESCENCE	SEE 33482-8795		
KEY A, BLACK	33482-1796	A-BLK	GCP	PLR	M-R							7		9					14	15	16	PLANNED OBSOLESCENCE	SEE 33482-8796		
KEY A, BLACK	33482-1797	A-BLK	GCP	PLR	M-R							7	8				12					PLANNED OBSOLESCENCE	SEE 33482-8797		
KEY A, BLACK	33482-1798	A-BLK	GCP	PLR	M-R			3							10	11	12	13	14	15	16	PLANNED OBSOLESCENCE	SEE 33482-8798		
KEY A, BLACK	33482-1799	A-BLK	GCP	PLR	M-R			3	4	5	6	7			10					15	16	PLANNED OBSOLESCENCE	SEE 33482-8799		
KEY A, BLACK	33482-1800	A-BLK	GCP	PLR	M-R	1	2			5								13	14			PLANNED OBSOLESCENCE	SEE 33482-8800		
KEY A, BLACK	33482-1801	A-BLK	GCP	PLR	M-R					5		7	8	9	10	11	12	13	14			PLANNED OBSOLESCENCE	SEE 33482-8801		
KEY A, BLACK	33482-1802	A-BLK	GCP	PLR	M-R					5								13	14			PLANNED OBSOLESCENCE	SEE 33482-8802		
KEY A, BLACK	33482-1803	A-BLK	GCP	PLR	M-R	1	2			5												PLANNED OBSOLESCENCE	SEE 33482-8803		
KEY A, BLACK	33482-1804	A-BLK	GCP	PLR	M-R	1	2			5		7	8	9	10	11	12	13	14			PLANNED OBSOLESCENCE	SEE 33482-8804		
KEY A, BLACK	33482-1805	A-BLK	GCP	PLR	M-R						6				10	11	12	13	14	15	16	PLANNED OBSOLESCENCE	SEE 33482-8805		
KEY A, BLACK	33482-1806	A-BLK	GCP	PLR	M-R						6							13	14	15	16	PLANNED OBSOLESCENCE	SEE 33482-8806		
KEY A, BLACK	33482-1807	A-BLK	GCP	PLR	M-R						6							13	14			PLANNED OBSOLESCENCE	SEE 33482-8807		
KEY A, BLACK	33482-1808	A-BLK	GCP	PLR	M-R	1	2	3	4	5	6							13	14	15	16	PLANNED OBSOLESCENCE	SEE 33482-8808		
KEY A, BLACK	33482-1809	A-BLK	GCP	PLR	M-R	1							8							15		PLANNED OBSOLESCENCE	SEE 33482-8809		
KEY A, BLACK	33482-1810	A-BLK	GCP	PLR	M-R	1														15		PLANNED OBSOLESCENCE	SEE 33482-8810		
KEY A, BLACK	33482-1811	A-BLK	GCP	PLR	M-R								8					13			16	PLANNED OBSOLESCENCE	SEE 33482-8811		
KEY A, BLACK	33482-1812	A-BLK	GCP	PLR	M-R								8			11	12	13			16	PLANNED OBSOLESCENCE	SEE 33482-8812		
KEY A, BLACK	33482-1813	A-BLK	GCP	PLR	M-R				4	5	6	7			10				14	15	16	PLANNED OBSOLESCENCE	SEE 33482-8813		
KEY A, BLACK	33482-1814	A-BLK	GCP	PLR	M-R							7			10							PLANNED OBSOLESCENCE	SEE 33482-8814		
KEY A, BLACK	33482-1815	A-BLK	GCP	PLR	M-R	1		3		5	6						12	13				PLANNED OBSOLESCENCE	SEE 33482-8815		
KEY A, BLACK	33482-1816	A-BLK	GCP	PLR	M-R			3		5	6	7			10			13	14	15	16	PLANNED OBSOLESCENCE	SEE 33482-8816		
KEY A, BLACK	33482-1817	A-BLK	GCP	PLR	M-R											11	12		14	15	16	PLANNED OBSOLESCENCE	SEE 33482-8817		
KEY A, BLACK	33482-1818	A-BLK	GCP	PLR	M-R						6	7	8		10	11	12	13	14	15		PLANNED OBSOLESCENCE	SEE 33482-8818		
KEY A, BLACK	33482-1819	A-BLK	GCP	PLR	M-R	1	2					7		9	10	11	12	13	14		16	PLANNED OBSOLESCENCE	SEE 33482-8819		
KEY A, BLACK	33482-1820	A-BLK	GCP	PLR	M-R		2					7		9			12	13	14		16	PLANNED OBSOLESCENCE	SEE 33482-8820		
KEY A, BLACK	33482-1821	A-BLK	GCP	PLR	M-R		2	3				7		9	10	11				15	16	PLANNED OBSOLESCENCE	SEE 33482-8821		
KEY A, BLACK	33482-1822	A-BLK	GCP	PLR	M-R	1			4	5	6		8				12	13	14			PLANNED OBSOLESCENCE	SEE 33482-8822		
KEY B, LIGHT GRAY	33482-1823	B-LG	GCP	PLR	M-R					5	6			9			12	13	14	15		PLANNED OBSOLESCENCE	SEE 33482-8823		
KEY A, BLACK	33482-1824	A-BLK	GCP	PLR	M-R							7	8									PLANNED OBSOLESCENCE	SEE 33482-8824		
KEY A, BLACK	33482-1825	A-BLK	GCP	PLR	M-R										10			13	14	15	16	PLANNED OBSOLESCENCE	SEE 33482-8825		
KEY A, BLACK	33482-1826	A-BLK	GCP	PLR	M-R	1	2	3	4	5	6					11	12					PLANNED OBSOLESCENCE	SEE 33482-8826		
KEY A, BLACK	33482-1827	A-BLK	GCP	PLR	M-R			3	4		6	7		9							16	PLANNED OBSOLESCENCE	SEE 33482-8827		
KEY A, BLACK	33482-1828	A-BLK	GCP	PLR	M-R						6	7		9							16	PLANNED OBSOLESCENCE	SEE 33482-8828		
KEY A, BLACK	33482-1829	A-BLK	GCP	PLR	M-R	1	2		4	5		7	8	9						15	16	PLANNED OBSOLESCENCE	SEE 33482-8829		
KEY A, BLACK	33482-1830	A-BLK	GCP	PLR	M-R											11	12	13	14	15		PLANNED OBSOLESCENCE	SEE 33482-8830		
KEY A, BLACK	33482-1831	A-BLK	GCP	PLR	M-R												12	13	14			PLANNED OBSOLESCENCE	SEE 33482-8831		
KEY B, LIGHT GRAY	33482-1832	B-LG	GCP	PLR	M-R														14	15		PLANNED OBSOLESCENCE	SEE 33482-8832		
KEY A, BLACK	33482-1833	A-BLK	GCP	PLR	M-R		2						8		10	11				15	16	PLANNED OBSOLESCENCE	SEE 33482-8833		
KEY A, BLACK	33482-1834	A-BLK	GCP	PLR	M-R										10	11				15		PLANNED OBSOLESCENCE	SEE 33482-8834		
KEY A, BLACK	33482-1835	A-BLK	GCP	PLR	M-R	1							8		10	11				15		PLANNED OBSOLESCENCE	SEE 33482-8835		
KEY A, BLACK	33482-1836	A-BLK	GCP	PLR	M-R	1	2	3	4	5	6	7	8		10	11				15		PLANNED OBSOLESCENCE	SEE 33482-8836		
KEY A, BLACK	33482-1837	A-BLK	GCP	PLR	M-R	1							8	9	10	11				15	16	PLANNED OBSOLESCENCE	SEE 33482-8837		
KEY A, BLACK	33482-1838	A-BLK	GCP	PLR	M-R									9	10	11				15	16	PLANNED OBSOLESCENCE	SEE 33482-8838		
KEY A, BLACK	33482-1839	A-BLK	GCP	PLR	M-R	1	2	3	4	5	6	7	8									PLANNED OBSOLESCENCE	SEE 33482-8839		
KEY A, BLACK	33482-8601	A-BLK	GCP	PLR	M-B																	SALEABLE			
KEY B, LIGHT GRAY	33482-8602	B-LG	GCP	PLR	M-B																	SALEABLE			
KEY C, BROWN	33482-8603	C-BR	GCP	PLR	M-B																	NOT RECOMMENDED	SEE 33482-8725		
KEY D, GREEN	33482-8604	D-GR	GCP	PLR	M-B																	NOT RECOMMENDED	SEE 33482-8726		
VOID KEY	33482-8605																								
KEY A, BLACK	33482-8606	A-BLK	GCP	PLR	M-B								8									SALEABLE			
KEY B, LIGHT GRAY	33482-8607	B-LG	GCP	PLR	M-B								8									SALEABLE			

molex

MX150 2X8 BLADE SEALED ASSY MAT SEAL
BOM AND PIN OUT SHEET

ASSEMBLY DESCRIPTION	ASSEMBLY PART NUMBER	COMPONENT				BLOCKED TERMINALS																STATUS	COMMENTS	OPTIONAL ATTATCHMENTS SOLD SEPERATELY	
		THE PRESENCE OF AN ABBREVIATION INDICATES THE PRESENCE OF THAT COMPONENT.				CAVITY WITH A NUMBER INDICATES BLOCKED TERMINAL POSITION CAVITY WITHOUT A NUMBER INDICATES OPEN TERMINAL POSITION																			
		HOUSING KEY/COLOR	GROMMET CAP	PLR	MAT SEAL	1	2	3	4	5	6	7	8	9	10	11	12	13	14	15	16			BACKSHELL WITH RIBS	BACKSHELL WITHOUT RIBS
KEY C, BROWN	33482-8608	C-BR	GCP	PLR	M-B								8									NOT RECOMMENDED	SEE 33482-8751		
KEY D, GREEN	33482-8609	D-GR	GCP	PLR	M-B								8									NOT RECOMMENDED	SEE 33482-8752		
VOID KEY	33482-8610												8												
KEY A, BLACK	33482-8611	A-BLK	GCP	PLR	M-B								8	9								SALEABLE			
KEY B, LIGHT GRAY	33482-8612	B-LG	GCP	PLR	M-B								8	9								SALEABLE			
KEY C, BROWN	33482-8613	C-BR	GCP	PLR	M-B								8	9								NOT RECOMMENDED	SEE 33482-8753		
KEY D, GREEN	33482-8614	D-GR	GCP	PLR	M-B								8	9								NOT RECOMMENDED	SEE 33482-8754		
VOID KEY	33482-8615												8	9											
KEY A, BLACK	33482-8616	A-BLK	GCP	PLR	M-B	1							8	9								SALEABLE			
KEY B, LIGHT GRAY	33482-8617	B-LG	GCP	PLR	M-B	1							8	9								SALEABLE			
KEY C, BROWN	33482-8618	C-BR	GCP	PLR	M-B	1							8	9								NOT RECOMMENDED	SEE 33482-8755		
KEY D, GREEN	33482-8619	D-GR	GCP	PLR	M-B	1							8	9								NOT RECOMMENDED	SEE 33482-8756		
VOID KEY	33482-8620					1							8	9											
KEY A, BLACK	33482-8621	A-BLK	GCP	PLR	M-B	1	2	3	4	5	6	7	8	9	10	11	12	13	14	15	16	SALEABLE			
KEY B, LIGHT GRAY	33482-8622	B-LG	GCP	PLR	M-B	1	2	3	4	5	6	7	8	9	10	11	12	13	14	15	16	SALEABLE			
KEY C, BROWN	33482-8623	C-BR	GCP	PLR	M-B	1	2	3	4	5	6	7	8	9	10	11	12	13	14	15	16	NOT RECOMMENDED	SEE 33482-8727		
KEY D, GREEN	33482-8624	D-GR	GCP	PLR	M-B	1	2	3	4	5	6	7	8	9	10	11	12	13	14	15	16	NOT RECOMMENDED	SEE 33482-8728		
VOID KEY	33482-8625					1	2	3	4	5	6	7	8	9	10	11	12	13	14	15	16				
KEY A, BLACK	33482-8626	A-BLK	GCP	PLR	M-B															15		SALEABLE			
KEY A, BLACK	33482-8627	A-BLK	GCP	PLR	M-B	1							8	9							16	SALEABLE			
KEY B, LIGHT GRAY	33482-8628	B-LG	GCP	PLR	M-B	1							8	9							16	SALEABLE			
KEY C, BROWN	33482-8629	C-BR	GCP	PLR	M-B	1							8	9							16	NOT RECOMMENDED	SEE 33482-8757		
KEY D, GREEN	33482-8630	D-GR	GCP	PLR	M-B	1							8	9							16	NOT RECOMMENDED	SEE 33482-8758		
VOID KEY	33482-8631					1							8	9							16				
KEY A, BLACK	33482-8632	A-BLK	GCP	PLR	M-B				4			7	8				12	13	14			SALEABLE			
KEY A, BLACK	33482-8633	A-BLK	GCP	PLR	M-B			3	4	5					10	11	12	13	14	15	16	SALEABLE			
KEY A, BLACK	33482-8634	A-BLK	GCP	PLR	M-B							7	8				12	13	14			SALEABLE			
KEY B, LIGHT GRAY	33482-8635	B-LG	GCP	PLR	M-B								8					13	14	15	16	SALEABLE			
KEY A, BLACK	33482-8636	A-BLK	GCP	PLR	M-B										10	11		13	14	15	16	SALEABLE			
KEY A, BLACK	33482-8637	A-BLK	GCP	PLR	M-B										10	11				15	16	SALEABLE			
KEY A, BLACK	33482-8638	A-BLK	GCP	PLR	M-B								8	9	10	11	12			15	16	SALEABLE			
KEY A, BLACK	33482-8639	A-BLK	GCP	PLR	M-B															15		SALEABLE			
KEY A, BLACK	33482-8640	A-BLK	GCP	PLR	M-B					5											16	SALEABLE			
KEY A, BLACK	33482-8641	A-BLK	GCP	PLR	M-B					5												SALEABLE			
KEY B, LIGHT GRAY	33482-8642	B-LG	GCP	PLR	M-B				4		6	7	8				12		14			SALEABLE			
KEY A, BLACK	33482-8643	A-BLK	GCP	PLR	M-B															15	16	SALEABLE			
KEY B, LIGHT GRAY	33482-8644	B-LG	GCP	PLR	M-B				4													SALEABLE			
KEY B, LIGHT GRAY	33482-8645	B-LG	GCP	PLR	M-B				4		6	7	8									SALEABLE			
KEY A, BLACK	33482-8646	A-BLK	GCP	PLR	M-B				4		6	7	8				12					SALEABLE			
KEY A, BLACK	33482-8647	A-BLK	GCP	PLR	M-B																16	SALEABLE			
KEY A, BLACK	33482-8648	A-BLK	GCP	PLR	M-B				4								12					SALEABLE			
KEY B, LIGHT GRAY	33482-8649	B-LG	GCP	PLR	M-B																16	SALEABLE			
KEY B, LIGHT GRAY	33482-8650	B-LG	GCP	PLR	M-B				4								12		14			SALEABLE			
KEY B, LIGHT GRAY	33482-8651	B-LG	GCP	PLR	M-B														14			SALEABLE			
KEY B, LIGHT GRAY	33482-8652	B-LG	GCP	PLR	M-B						6	7	8						14			SALEABLE			
KEY A, BLACK	33482-8653	A-BLK	GCP	PLR	M-B									9						15		SALEABLE			
KEY A, BLACK	33482-8654	A-BLK	GCP	PLR	M-B				4				8				12					SALEABLE			
KEY B, LIGHT GRAY	33482-8655	B-LG	GCP	PLR	M-B				4				8				12		14			SALEABLE			
KEY B, LIGHT GRAY	33482-8656	B-LG	GCP	PLR	M-B								8						14			SALEABLE			
KEY A, BLACK	33482-8657	A-BLK	GCP	PLR	M-B	1						7										SALEABLE			
KEY B, LIGHT GRAY	33482-8658	B-LG	GCP	PLR	M-B		2		4		6	7	8				12		14			SALEABLE			
KEY B, LIGHT GRAY	33482-8659	B-LG	GCP	PLR	M-B		2				6	7	8						14			SALEABLE			
KEY B, LIGHT GRAY	33482-8660	B-LG	GCP	PLR	M-B		2						8						14			SALEABLE			
KEY A, BLACK	33482-8661	A-BLK	GCP	PLR	M-B		2		4				8				12					SALEABLE			
KEY B, LIGHT GRAY	33482-8662	B-LG	GCP	PLR	M-B		2		4				8				12		14			SALEABLE			
KEY A, BLACK	33482-8663	A-BLK	GCP	PLR	M-B		2						8									SALEABLE			
KEY A, BLACK	33482-8664	A-BLK	GCP	PLR	M-B			3					8		10	11				15	16	SALEABLE			
KEY A, BLACK	33482-8665	A-BLK	GCP	PLR	M-B			3	4	5	6	7	8		10	11				15	16	SALEABLE			
KEY A, BLACK	33482-8666	A-BLK	GCP	PLR	M-B		2				6	7	8		10			13	14	15	16	SALEABLE			
KEY A, BLACK	33482-8667	A-BLK	GCP	PLR	M-B		2			5	6				10			13	14	15	16	SALEABLE			
KEY A, BLACK	33482-8668	A-BLK	GCP	PLR	M-B		2			5	6				10	11		13	14	15	16	SALEABLE			
KEY A, BLACK	33482-8669	A-BLK	GCP	PLR	M-B		2				6				10			13	14			SALEABLE			
KEY A, BLACK	33482-8670	A-BLK	GCP	PLR	M-B		2		4	5	6	7	8		10	11	12	13	14			SALEABLE			
KEY A, BLACK	33482-8671	A-BLK	GCP	PLR	M-B		2		4	5	6				10		12	13	14			SALEABLE			
KEY A, BLACK	33482-8672	A-BLK	GCP	PLR	M-B				4				8									SALEABLE			
KEY A, BLACK	33482-8673	A-BLK	GCP	PLR	M-B		2				6	7	8									SALEABLE			
KEY A, BLACK	33482-8674	A-BLK	GCP	PLR	M-B		2			5	6											SALEABLE			
KEY A, BLACK	33482-8675	A-BLK	GCP	PLR	M-B		2			5	6					11						SALEABLE			
KEY A, BLACK	33482-8676	A-BLK	GCP	PLR	M-B					5	6	7	8					13				SALEABLE			
KEY A, BLACK	33482-8677	A-BLK	GCP	PLR	M-B					5	6	7	8			11		13				SALEABLE			
KEY A, BLACK	33482-8678	A-BLK	GCP	PLR	M-B					5	6	7	8				12	13	14			SALEABLE			
KEY A, BLACK	33482-8679	A-BLK	GCP	PLR	M-B					5	6	7	8			11	12	13	14			SALEABLE			
KEY A, BLACK	33482-8680	A-BLK	GCP	PLR	M-B					5	6	7	8			11	12	13	14	15		SALEABLE			
KEY A, BLACK	33482-8681	A-BLK	GCP	PLR	M-B							7								15		SALEABLE			
KEY A, BLACK	33482-8682	A-BLK	GCP	PLR	M-B				4	5	6									15	16	SALEABLE			
KEY A, BLACK	33482-8683	A-BLK	GCP	PLR	M-B			3	4	5	6									15	16	SALEABLE			
KEY A, BLACK	33482-8684	A-BLK	GCP	PLR	M-B	1	2	3	4	5	6		8					13		15	16	SALEABLE			
KEY A, BLACK	33482-8685	A-BLK	GCP	PLR	M-B													13	14	15	16	SALEABLE			
KEY A, BLACK	33482-8686	A-BLK	GCP	PLR	M-B								8					13	14	15	16	SALEABLE			
KEY A, BLACK	33482-8687	A-BLK	GCP	PLR	M-B							7	8			11	12	13	14	15		SALEABLE			
KEY A, BLACK	33482-8688	A-BLK	GCP	PLR	M-B							7	8				12	13	14	15		SALEABLE			
KEY A, BLACK	33482-8689	A-BLK	GCP	PLR	M-B							7	8			11		13				SALEABLE			
KEY A, BLACK	33482-8690	A-BLK	GCP	PLR	M-B							7	8					13				SALEABLE			
KEY A, BLACK	33482-8691	A-BLK	GCP	PLR	M-B					5								13				SALEABLE			
KEY A, BLACK	33482-8692	A-BLK	GCP	PLR	M-B		2							9	10					15	16	SALEABLE			
KEY A, BLACK	33482-8693	A-BLK	GCP	PLR	M-B		2								10					15		SALEABLE			
KEY A, BLACK	33482-8694	A-BLK	GCP	PLR	M-B		2			5	6	7	8	9	10		12		14	15	16	SALEABLE			
KEY A, BLACK	33482-8695	A-BLK	GCP	PLR	M-B		2			5	6	7	8		10		12		14	15		SALEABLE			
KEY A, BLACK	33482-8700	A-BLK	GCP	PLR	M-B	1	2	3	4	5	6				10	11	12	13	14	15	16	SALEABLE			

MX150 2X8 BLADE SEALED ASSY MAT SEAL
BOM AND PIN OUT SHEET

ASSEMBLY DESCRIPTION	ASSEMBLY PART NUMBER	COMPONENT				BLOCKED TERMINALS																STATUS	COMMENTS	OPTIONAL ATTATCHMENTS SOLD SEPERATELY	
		THE PRESENCE OF AN ABBREVIATION INDICATES THE PRESENCE OF THAT COMPONENT.				CAVITY WITH A NUMBER INDICATES BLOCKED TERMINAL POSITION CAVITY WITHOUT A NUMBER INDICATES OPEN TERMINAL POSITION																			
		HOUSING KEY/COLOR	GROMMET CAP	PLR	MAT SEAL	1	2	3	4	5	6	7	8	9	10	11	12	13	14	15	16			BACKSHELL WITH RIBS	BACKSHELL WITHOUT RIBS
KEY A, BLACK	33482-8701	A-BLK	GCP	PLR	M-B	1	2	3	4	5	6					11	12	13	14	15	16	SALEABLE			
KEY A, BLACK	33482-8702	A-BLK	GCP	PLR	M-B							7	8	9	10	11	12	13	14	15	16	SALEABLE			
KEY A, BLACK	33482-8703	A-BLK	GCP	PLR	M-B								8	9	10	11	12	13	14	15	16	SALEABLE			
KEY A, BLACK	33482-8704	A-BLK	GCP	PLR	M-B	1	2	3	4	5	6								14	15	16	SALEABLE			
KEY A, BLACK	33482-8705	A-BLK	GCP	PLR	M-B										10	11	12	13	14	15	16	SALEABLE			
KEY A, BLACK	33482-8706	A-BLK	GCP	PLR	M-B											11	12	13	14	15	16	SALEABLE			
KEY A, BLACK	33482-8707	A-BLK	GCP	PLR	M-B							7	8	9	10							SALEABLE			
KEY A, BLACK	33482-8708	A-BLK	GCP	PLR	M-B														14	15	16	SALEABLE			
KEY A, BLACK	33482-8709	A-BLK	GCP	PLR	M-B												12	13	14	15	16	SALEABLE			
KEY A, BLACK	33482-8710	A-BLK	GCP	PLR	M-B	1	2	3	4	5	6	7	8	9	10							SALEABLE			
KEY B, LIGHT GRAY	33482-8711	B-LG	GCP	PLR	M-B	1	2	3	4	5	6	7	8	9	10		12		14	15	16	SALEABLE			
KEY B, LIGHT GRAY	33482-8712	B-LG	GCP	PLR	M-B	1	2	3	4		6	7	8	9	10		12		14	15		SALEABLE			
KEY A, BLACK	33482-8713	A-BLK	GCP	PLR	M-B		2	3	4					9	10					15	16	SALEABLE			
KEY A, BLACK	33482-8714	A-BLK	GCP	PLR	M-B		2	3	4	5	6	7	8	9	10		12		14	15	16	SALEABLE			
KEY A, BLACK	33482-8715	A-BLK	GCP	PLR	M-B	1	2	3	4			7	8	9	10	11	12			15	16	SALEABLE			
KEY A, BLACK	33482-8716	A-BLK	GCP	PLR	M-B	1	2	3	4				8	9	10	11	12				16	SALEABLE			
KEY A, BLACK	33482-8717	A-BLK	GCP	PLR	M-B	1	2	3	4	5	6	7	8					13	14	15	16	SALEABLE			
KEY A, BLACK	33482-8718	A-BLK	GCP	PLR	M-B													13	14	15	16	SALEABLE			
KEY A, BLACK	33482-8719	A-BLK	GCP	PLR	M-B	1				5		7	8		10	11			14	15		SALEABLE			
KEY A, BLACK	33482-8720	A-BLK	GCP	PLR	M-B												12		14			SALEABLE			
KEY B, LIGHT GRAY	33482-8721	B-LG	GCP	PLR	M-B				4		6	7	8			11	12	13	14			SALEABLE			
KEY B, LIGHT GRAY	33482-8722	B-LG	GCP	PLR	M-B	1	2	3	4		6	7	8	9	10	11	12	13	14	15		SALEABLE			
KEY A, BLACK	33482-8723	A-BLK	GCP	PLR	M-B	1	2	3	4	5	6			9				13	14	15	16	SALEABLE			
KEY A, BLACK	33482-8724	A-BLK	GCP	PLR	M-B														14	15		SALEABLE			
KEY C, DARK GRAY	33482-8725	C-DG	GCP	PLR	M-B																	SALEABLE			
KEY D, STONE GRAY	33482-8726	D-SG	GCP	PLR	M-B																	SALEABLE			
KEY C, DARK GRAY	33482-8727	C-DG	GCP	PLR	M-B	1	2	3	4	5	6	7	8	9	10	11	12	13	14	15	16	SALEABLE			
KEY D, STONE GRAY	33482-8728	D-SG	GCP	PLR	M-B	1	2	3	4	5	6	7	8	9	10	11	12	13	14	15	16	SALEABLE			
KEY A, BLACK	33482-8729	A-BLK	GCP	PLR	M-B								8	9			12	13	14	15	16	SALEABLE			
KEY A, BLACK	33482-8730	A-BLK	GCP	PLR	M-B				4	5	6	7	8	9	10	11	12	13	14	15	16	SALEABLE			
KEY A, BLACK	33482-8731	A-BLK	GCP	PLR	M-B									9	10	11	12	13	14	15	16	SALEABLE			
KEY B, LIGHT GRAY	33482-8732	B-LG	GCP	PLR	M-B						6	7	8			11						SALEABLE			
KEY B, LIGHT GRAY	33482-8733	B-LG	GCP	PLR	M-B	1	2	3	4	5	6			9	10	11	12	13	14	15	16	SALEABLE			
KEY B, LIGHT GRAY	33482-8734	B-LG	GCP	PLR	M-B						6			9		11	12	13		15	16	SALEABLE			
KEY A, BLACK	33482-8735	A-BLK	GCP	PLR	M-B						6				10	11	12	13	14			SALEABLE			
KEY A, BLACK	33482-8736	A-BLK	GCP	PLR	M-B	1	2	3	4	5	6							13	14			SALEABLE			
KEY A, BLACK	33482-8737	A-BLK	GCP	PLR	M-B	1	2	3	4	5	6				10	11	12	13	14			SALEABLE			
KEY A, BLACK	33482-8738	A-BLK	GCP	PLR	M-B	1	2			5	6	7	8									SALEABLE			
KEY A, BLACK	33482-8739	A-BLK	GCP	PLR	M-B			3	4							11	12					SALEABLE			
KEY A, BLACK	33482-8740	A-BLK	GCP	PLR	M-B									9				13	14	15	16	SALEABLE			
KEY A, BLACK	33482-8741	A-BLK	GCP	PLR	M-B			3	4					9	10	11	12	13	14	15	16	SALEABLE			
KEY A, BLACK	33482-8742	A-BLK	GCP	PLR	M-B											11	12	13	14			SALEABLE			
KEY A, BLACK	33482-8743	A-BLK	GCP	PLR	M-B											11			14			SALEABLE			
KEY A, BLACK	33482-8744	A-BLK	GCP	PLR	M-B		2					7		9		11	12	13	14		16	SALEABLE			
KEY A, BLACK	33482-8745	A-BLK	GCP	PLR	M-B		2							9			12	13	14			SALEABLE			
KEY A, BLACK	33482-8746	A-BLK	GCP	PLR	M-B		2							9								SALEABLE			
KEY A, BLACK	33482-8747	A-BLK	GCP	PLR	M-B												12	13	14		16	SALEABLE			
KEY A, BLACK	33482-8748	A-BLK	GCP	PLR	M-B		2							9			12	13	14		16	SALEABLE			
KEY A, BLACK	33482-8749	A-BLK	GCP	PLR	M-B	1									10	11	12	13	14		16	SALEABLE			
KEY A, BLACK	33482-8750	A-BLK	GCP	PLR	M-B	1	2							9	10	11	12	13	14		16	SALEABLE			
KEY C, DARK GRAY	33482-8751	C-DG	GCP	PLR	M-B								8									SALEABLE			
KEY D, STONE GRAY	33482-8752	D-SG	GCP	PLR	M-B								8									SALEABLE			
KEY C, DARK GRAY	33482-8753	C-DG	GCP	PLR	M-B								8	9								SALEABLE			
KEY D, STONE GRAY	33482-8754	D-SG	GCP	PLR	M-B								8	9								SALEABLE			
KEY C, DARK GRAY	33482-8755	C-DG	GCP	PLR	M-B	1							8	9								SALEABLE			
KEY D, STONE GRAY	33482-8756	D-SG	GCP	PLR	M-B	1							8	9								SALEABLE			
KEY C, DARK GRAY	33482-8757	C-DG	GCP	PLR	M-B	1							8	9							16	SALEABLE			
KEY D, STONE GRAY	33482-8758	D-SG	GCP	PLR	M-B	1							8	9							16	SALEABLE			
KEY A, BLACK	33482-8759	A-BLK	GCP	PLR	M-B	1	2	3	4	5			8	9	10	11	12	13	14		16	SALEABLE			
KEY A, BLACK	33482-8760	A-BLK	GCP	PLR	M-B		2					7		9							16	SALEABLE			
KEY A, BLACK	33482-8761	A-BLK	GCP	PLR	M-B		2			5				9								SALEABLE			
KEY A, BLACK	33482-8762	A-BLK	GCP	PLR	M-B	1	2			5		7		9	10	11	12	13	14		16	SALEABLE			
KEY A, BLACK	33482-8763	A-BLK	GCP	PLR	M-B							7									16	SALEABLE			
KEY A, BLACK	33482-8764	A-BLK	GCP	PLR	M-B					5	6	7		9		11	12	13	14		16	SALEABLE			
KEY A, BLACK	33482-8765	A-BLK	GCP	PLR	M-B		2			5		7		9			12	13	14		16	SALEABLE			
KEY A, BLACK	33482-8766	A-BLK	GCP	PLR	M-B					5	6	7		9	10	11	12	13	14		16	SALEABLE			
KEY A, BLACK	33482-8767	A-BLK	GCP	PLR	M-B					5	6	7		9							16	SALEABLE			
KEY A, BLACK	33482-8768	A-BLK	GCP	PLR	M-B					5	6	7		9	10						16	SALEABLE			
KEY A, BLACK	33482-8769	A-BLK	GCP	PLR	M-B	1			4	5	6		8				12	13	14		16	SALEABLE			
KEY A, BLACK	33482-8770	A-BLK	GCP	PLR	M-B	1	2		4	5	6		8	9	10		12	13	14	15	16	SALEABLE			
KEY A, BLACK	33482-8771	A-BLK	GCP	PLR	M-B	1			4		6	7	8		10			13	14	15		SALEABLE			
KEY A, BLACK	33482-8772	A-BLK	GCP	PLR	M-B										10			13	14	15	16	SALEABLE			
KEY A, BLACK	33482-8773	A-BLK	GCP	PLR	M-B	1	2	3	4	5	6					11	12					SALEABLE			
KEY A, BLACK	33482-8774	A-BLK	GCP	PLR	M-B										10					15		SALEABLE			
KEY A, BLACK	33482-8775	A-BLK	GCP	PLR	M-B									9	10					15	16	SALEABLE			
KEY A, BLACK	33482-8776	A-BLK	GCP	PLR	M-B			3	4					9	10					15	16	SALEABLE			
KEY A, YELLOW	33482-8777	A-YW	GCP	PLR	M-B																	SALEABLE			
KEY A, BLACK	33482-8778	A-BLK	GCP	PLR	M-B					5			8									SALEABLE			
KEY A, BLACK	33482-8779	A-BLK	GCP	PLR	M-B					5	6	7	8	9	10	11	12					SALEABLE			
KEY A, BLACK	33482-8780	A-BLK	GCP	PLR	M-B			3	4	5	6							13	14			SALEABLE			
KEY A, BLACK	33482-8781	A-BLK	GCP	PLR	M-B	1			4	5	6	7	8	9	10			13	14	15		SALEABLE			
KEY A, BLACK	33482-8782	A-BLK	GCP	PLR	M-B	1			4		6	7	8		10	11	12	13	14	15		SALEABLE			
KEY A, BLACK	33482-8783	A-BLK	GCP	PLR	M-B											11	12			15		SALEABLE			
KEY A, BLACK	33482-8784	A-BLK	GCP	PLR	M-B			3														SALEABLE			
KEY A, BLACK	33482-8785	A-BLK	GCP	PLR	M-B	1				5		7				11	12	13	14	15	16	SALEABLE			
KEY A, BLACK	33482-8786	A-BLK	GCP	PLR	M-B		2			5		7		9		11	12	13	14	15	16	SALEABLE			
KEY A, BLACK	33482-8787	A-BLK	GCP	PLR	M-B	1	2			5				9								SALEABLE			
KEY A, BLACK	33482-8788	A-BLK	GCP	PLR	M-B	1	2					7		9		11	12	13	14	15	16	SALEABLE			
KEY A, BLACK	33482-8789	A-BLK	GCP	PLR	M-B	1	2			5				9						15		SALEABLE			

molex

MX150 2X8 BLADE SEALED ASSY MAT SEAL
BOM AND PIN OUT SHEET

ASSEMBLY DESCRIPTION	ASSEMBLY PART NUMBER	COMPONENT				BLOCKED TERMINALS																STATUS	COMMENTS	OPTIONAL ATTATCHMENTS SOLD SEPERATELY	
		THE PRESENCE OF AN ABBREVIATION INDICATES THE PRESENCE OF THAT COMPONENT.				CAVITY WITH A NUMBER INDICATES BLOCKED TERMINAL POSITION CAVITY WITHOUT A NUMBER INDICATES OPEN TERMINAL POSITION																			
		HOUSING KEY/COLOR	GROMMET CAP	PLR	MAT SEAL	1	2	3	4	5	6	7	8	9	10	11	12	13	14	15	16			BACKSHELL WITH RIBS	BACKSHELL WITHOUT RIBS
KEY A, BLACK	33482-8790	A-BLK	GCP	PLR	M-B	1	2			5		7		9		11	12	13	14	15	16	SALEABLE			
KEY A, BLACK	33482-8791	A-BLK	GCP	PLR	M-B	1	2	3														SALEABLE			
KEY A, BLACK	33482-8792	A-BLK	GCP	PLR	M-B					5		7									16	SALEABLE			
KEY A, BLACK	33482-8793	A-BLK	GCP	PLR	M-B		2	3							10	11						SALEABLE			
KEY A, BLACK	33482-8794	A-BLK	GCP	PLR	M-B	1	2	3		5	6						12	13				SALEABLE			
KEY A, BLACK	33482-8795	A-BLK	GCP	PLR	M-B			3							10			13	14	15		SALEABLE			
KEY A, BLACK	33482-8796	A-BLK	GCP	PLR	M-B							7		9					14	15	16	SALEABLE			
KEY A, BLACK	33482-8797	A-BLK	GCP	PLR	M-B							7	8				12					SALEABLE			
KEY A, BLACK	33482-8798	A-BLK	GCP	PLR	M-B			3							10	11	12	13	14	15	16	SALEABLE			
KEY A, BLACK	33482-8799	A-BLK	GCP	PLR	M-B			3	4	5	6	7			10					15	16	SALEABLE			
KEY A, BLACK	33482-8800	A-BLK	GCP	PLR	M-B	1	2			5								13	14			SALEABLE			
KEY A, BLACK	33482-8801	A-BLK	GCP	PLR	M-B					5		7	8	9	10	11	12	13	14			SALEABLE			
KEY A, BLACK	33482-8802	A-BLK	GCP	PLR	M-B					5								13	14			SALEABLE			
KEY A, BLACK	33482-8803	A-BLK	GCP	PLR	M-B	1	2			5												SALEABLE			
KEY A, BLACK	33482-8804	A-BLK	GCP	PLR	M-B	1	2			5		7	8	9	10	11	12	13	14			SALEABLE			
KEY A, BLACK	33482-8805	A-BLK	GCP	PLR	M-B						6				10	11	12	13	14	15	16	SALEABLE			
KEY A, BLACK	33482-8806	A-BLK	GCP	PLR	M-B						6							13	14	15	16	SALEABLE			
KEY A, BLACK	33482-8807	A-BLK	GCP	PLR	M-B						6							13	14			SALEABLE			
KEY A, BLACK	33482-8808	A-BLK	GCP	PLR	M-B	1	2	3	4	5	6							13	14	15	16	SALEABLE			
KEY A, BLACK	33482-8809	A-BLK	GCP	PLR	M-B	1							8							15		SALEABLE			
KEY A, BLACK	33482-8810	A-BLK	GCP	PLR	M-B	1														15		SALEABLE			
KEY A, BLACK	33482-8811	A-BLK	GCP	PLR	M-B								8					13			16	SALEABLE			
KEY A, BLACK	33482-8812	A-BLK	GCP	PLR	M-B								8			11	12	13			16	SALEABLE			
KEY A, BLACK	33482-8813	A-BLK	GCP	PLR	M-B				4	5	6	7			10				14	15	16	SALEABLE			
KEY A, BLACK	33482-8814	A-BLK	GCP	PLR	M-B							7			10							SALEABLE			
KEY A, BLACK	33482-8815	A-BLK	GCP	PLR	M-B	1		3		5	6						12	13				SALEABLE			
KEY A, BLACK	33482-8816	A-BLK	GCP	PLR	M-B			3		5	6	7			10			13	14	15	16	SALEABLE			
KEY A, BLACK	33482-8817	A-BLK	GCP	PLR	M-B											11	12		14	15	16	SALEABLE			
KEY A, BLACK	33482-8818	A-BLK	GCP	PLR	M-B						6	7	8		10	11	12	13	14	15		SALEABLE			
KEY A, BLACK	33482-8819	A-BLK	GCP	PLR	M-B	1	2					7		9	10	11	12	13	14		16	SALEABLE			
KEY A, BLACK	33482-8820	A-BLK	GCP	PLR	M-B		2					7		9			12	13	14		16	SALEABLE			
KEY A, BLACK	33482-8821	A-BLK	GCP	PLR	M-B		2	3				7		9	10	11				15	16	SALEABLE			
KEY A, BLACK	33482-8822	A-BLK	GCP	PLR	M-B	1			4	5	6		8				12	13	14			SALEABLE			
KEY B, LIGHT GRAY	33482-8823	B-LG	GCP	PLR	M-B					5	6			9			12	13	14	15		SALEABLE			
KEY A, BLACK	33482-8824	A-BLK	GCP	PLR	M-B							7	8									SALEABLE			
KEY A, BLACK	33482-8825	A-BLK	GCP	PLR	M-B										10			13	14	15	16	SALEABLE			
KEY A, BLACK	33482-8826	A-BLK	GCP	PLR	M-B	1	2	3	4	5	6					11	12					SALEABLE			
KEY A, BLACK	33482-8827	A-BLK	GCP	PLR	M-B			3	4		6	7		9							16	SALEABLE			
KEY A, BLACK	33482-8828	A-BLK	GCP	PLR	M-B						6	7		9							16	SALEABLE			
KEY A, BLACK	33482-8829	A-BLK	GCP	PLR	M-B	1	2		4	5		7	8	9						15	16	SALEABLE			
KEY A, BLACK	33482-8830	A-BLK	GCP	PLR	M-B											11	12	13	14	15		SALEABLE			
KEY A, BLACK	33482-8831	A-BLK	GCP	PLR	M-B												12	13	14			SALEABLE			
KEY B, LIGHT GRAY	33482-8832	B-LG	GCP	PLR	M-B														14	15		SALEABLE			
KEY A, BLACK	33482-8833	A-BLK	GCP	PLR	M-B		2						8		10	11				15	16	SALEABLE			
KEY A, BLACK	33482-8834	A-BLK	GCP	PLR	M-B										10	11				15		SALEABLE			
KEY A, BLACK	33482-8835	A-BLK	GCP	PLR	M-B	1							8		10	11				15		SALEABLE			
KEY A, BLACK	33482-8836	A-BLK	GCP	PLR	M-B	1	2	3	4	5	6	7	8		10	11				15		SALEABLE			
KEY A, BLACK	33482-8837	A-BLK	GCP	PLR	M-B	1							8	9	10	11				15	16	SALEABLE			
KEY A, BLACK	33482-8838	A-BLK	GCP	PLR	M-B									9	10	11				15	16	SALEABLE			
KEY A, BLACK	33482-8839	A-BLK	GCP	PLR	M-B	1	2	3	4	5	6	7	8									SALEABLE			

molex

MX150 2X10 BLADE SEALED ASSY MAT SEAL
BOM AND PIN OUT SHEET

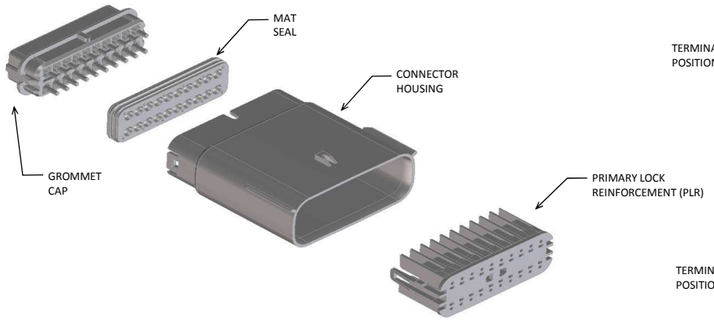

FOR ADDITIONAL INFORMATION SEE SD-33482-0001

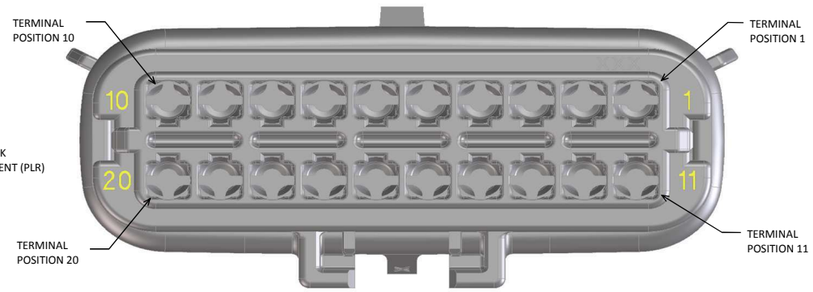

ABBREVIATION	DESCRIPTION	COLOR	MATERIAL
A-BLK	HOUSING, KEYING OPTION A	BLACK	SPS/NYLON GF20
B-LG	HOUSING, KEYING OPTION B	LIGHT GRAY	SPS/NYLON GF20
C-BR	HOUSING, KEYING OPTION C	BROWN	SPS/NYLON GF20
D-GR	HOUSING, KEYING OPTION D	GREEN	SPS/NYLON GF20
A-YL	HOUSING, KEYING OPTION A	YELLOW	SPS/NYLON GF20
C-DG	HOUSING, KEYING OPTION C	DARK GRAY	SPS/NYLON GF20
D-SG	HOUSING, KEYING OPTION D	STONE GRAY	SPS/NYLON GF20
GCP	GROMMET CAP (PLUGGED)	BLACK	SPS/NYLON GF20
GCO	GROMMET CAP (OPEN)	BLACK	SPS/NYLON GF20
PLR	PLR	NATURAL	SPS/NYLON GF20
M-R	MAT SEAL	RUST RED	INHERENTLY LUBRICATED SILICONE
M-B	MAT SEAL	LIGHT BLUE	INHERENTLY LUBRICATED SILICONE

ASSEMBLY DESCRIPTION	ASSEMBLY PART NUMBER	COMPONENT				BLOCKED TERMINALS																				STATUS	COMMENTS	OPTIONAL ATTATCHMENTS SOLD SEPERATELY	
		THE PRESENCE OF AN ABBREVIATION INDICATES THE PRESENCE OF THAT COMPONENT.				CAVITY WITH A NUMBER INDICATES BLOCKED TERMINAL POSITION CAVITY WITHOUT A NUMBER INDICATES OPEN TERMINAL POSITION																							
		HOUSING KEY/COLOR	GROMMET CAP	PLR	MAT SEAL	1	2	3	4	5	6	7	8	9	10	11	12	13	14	15	16	17	18	19	20			BACKSHELL WITH RIBS	BACKSHELL WITHOUT RIBS
KEY A, BLACK	33482-2001	A-BLK	GCO	PLR	M-R																					OBSOLETE	SEE 33482-2101		
KEY B, LIGHT GRAY	33482-2002	B-LG	GCO	PLR	M-R																					OBSOLETE	SEE 33482-2102		
KEY C, BROWN	33482-2003	C-BR	GCO	PLR	M-R																					OBSOLETE	SEE 33482-2103		
KEY D, GREEN	33482-2004	D-GR	GCO	PLR	M-R																					OBSOLETE	SEE 33482-2104		
KEY A, BLACK	33482-2006	A-BLK	GCP	PLR	M-R																				20	OBSOLETE	SEE 33482-2106		
KEY A, BLACK	33482-2007	A-BLK	GCP	PLR	M-R											11										OBSOLETE	SEE 33482-2107		
KEY A, BLACK	33482-2008	A-BLK	GCP	PLR	M-R				4	5	6	7							14	15	16	17				OBSOLETE	SEE 33482-2108		
KEY A, BLACK	33482-2009	A-BLK	GCP	PLR	M-R							7									16					OBSOLETE	SEE 33482-2109		
KEY A, BLACK	33482-2010	A-BLK	GCP	PLR	M-R										10	11	12								20	OBSOLETE	SEE 33482-2110		
KEY A, BLACK	33482-2011	A-BLK	GCP	PLR	M-R	1	2																		20	OBSOLETE	SEE 33482-2111		
KEY A, BLACK	33482-2012	A-BLK	GCP	PLR	M-R	1	2								10	11	12								20	OBSOLETE	SEE 33482-2112		
KEY A, BLACK	33482-2013	A-BLK	GCP	PLR	M-R	1	2								10	11	12	13	14						20	OBSOLETE	SEE 33482-2113		
KEY A, BLACK	33482-2014	A-BLK	GCP	PLR	M-R			3	4	5									14			17		19		OBSOLETE	SEE 33482-2114		
KEY A, BLACK	33482-2015	A-BLK	GCP	PLR	M-R			3	4	5												17				OBSOLETE	SEE 33482-2115		
KEY A, BLACK	33482-2016	A-BLK	GCP	PLR	M-R		2																18	19	20	OBSOLETE	SEE 33482-2116		
KEY A, BLACK	33482-2017	A-BLK	GCP	PLR	M-R																		18	19	20	OBSOLETE	SEE 33482-2117		
KEY A, BLACK	33482-2018	A-BLK	GCP	PLR	M-R										10		12	13	14					19		OBSOLETE	SEE 33482-2118		
KEY A, BLACK	33482-2019	A-BLK	GCP	PLR	M-R			3	4										14			17		19		OBSOLETE	SEE 33482-2119		
KEY A, BLACK	33482-2020	A-BLK	GCP	PLR	M-R			3	4	5									14			17	18	19	20	OBSOLETE	SEE 33482-2120		
KEY A, BLACK	33482-2021	A-BLK	GCP	PLR	M-R	1	2	3	4	5					10				14			17	18	19	20	OBSOLETE	SEE 33482-2121		
KEY A, BLACK	33482-2022	A-BLK	GCP	PLR	M-R			3	4						10				14			17		19		OBSOLETE	SEE 33482-2122		
KEY A, BLACK	33482-2023	A-BLK	GCP	PLR	M-R										10	11	12			15	16	17			20	OBSOLETE	SEE 33482-2123		
KEY A, BLACK	33482-2024	A-BLK	GCP	PLR	M-R															15	16	17			20	OBSOLETE	SEE 33482-2124		
KEY A, BLACK	33482-2025	A-BLK	GCP	PLR	M-R										10				14			17		19		OBSOLETE	SEE 33482-2125		
KEY A, BLACK	33482-2026	A-BLK	GCP	PLR	M-R				4	5					10				14	15		17		19		OBSOLETE	SEE 33482-2126		
KEY A, BLACK	33482-2027	A-BLK	GCP	PLR	M-R				4	5					10				14	15		17	18	19		OBSOLETE	SEE 33482-2127		
KEY A, BLACK	33482-2028	A-BLK	GCP	PLR	M-R	1		3	4	5	6	7	8	9	10	11		13	14	15	16	17	18	19	20	OBSOLETE	SEE 33482-2128		
KEY A, BLACK	33482-2029	A-BLK	GCP	PLR	M-R				4	5	6	7									16	17				OBSOLETE	SEE 33482-2129		
KEY A, BLACK	33482-2030	A-BLK	GCP	PLR	M-R			3	4	5								13	14	15			18	19		OBSOLETE	SEE 33482-2130		
KEY A, BLACK	33482-2031	A-BLK	GCP	PLR	M-R				4			7									16					OBSOLETE	SEE 33482-2131		
KEY A, BLACK	33482-2032	A-BLK	GCP	PLR	M-R			3	4	5								13		15			18	19		OBSOLETE	SEE 33482-2132		
KEY A, BLACK	33482-2033	A-BLK	GCP	PLR	M-R										10							17		19		OBSOLETE	SEE 33482-2133		
KEY A, BLACK	33482-2034	A-BLK	GCP	PLR	M-R																	17	18	19	20	OBSOLETE	SEE 33482-2134		
KEY A, BLACK	33482-2035	A-BLK	GCP	PLR	M-R																16	17	18	19	20	OBSOLETE	SEE 33482-2135		
KEY A, BLACK	33482-2036	A-BLK	GCP	PLR	M-R							7		9								17	18	19	20	OBSOLETE	SEE 33482-2136		
KEY A, BLACK	33482-2037	A-BLK	GCP	PLR	M-R							7		9												OBSOLETE	SEE 33482-2137		
KEY A, BLACK	33482-2038	A-BLK	GCP	PLR	M-R	1	2	3	4	5	6	7	8	9	10		12					17		19		OBSOLETE	SEE 33482-2138		
KEY A, BLACK	33482-2039	A-BLK	GCP	PLR	M-R	1	2	3	4	5	6	7	8		10							17		19		OBSOLETE	SEE 33482-2139		
KEY A, BLACK	33482-2040	A-BLK	GCP	PLR	M-R							7										17			20	OBSOLETE	SEE 33482-2140		
KEY A, YELLOW	33482-2041	A-YL	GCO	PLR	M-R																					OBSOLETE	SEE 33482-2141		
KEY A, BLACK	33482-2042	A-BLK	GCP	PLR	M-R										10				14			17	18	19		OBSOLETE	SEE 33482-2142		
KEY A, BLACK	33482-2043	A-BLK	GCP	PLR	M-R		2		4							11	12		14							OBSOLETE	SEE 33482-2143		
KEY A, BLACK	33482-2044	A-BLK	GCP	PLR	M-R																		18	19		OBSOLETE	SEE 33482-2144		
KEY A, BLACK	33482-2045	A-BLK	GCP	PLR	M-R									9	10											OBSOLETE	SEE 33482-2145		
KEY A, BLACK	33482-2046	A-BLK	GCP	PLR	M-R	1											12			15	16	17	18	19	20	OBSOLETE	SEE 33482-2146		
KEY A, BLACK	33482-2047	A-BLK	GCP	PLR	M-R			3	4	5					10			13	14	15		17	18	19		OBSOLETE	SEE 33482-2147		
KEY A, BLACK	33482-2048	A-BLK	GCP	PLR	M-R	1	2	3	4	5	6	7	8	9		11	12	13	14	15	16		18	19	20	OBSOLETE	SEE 33482-2148		
KEY A, BLACK	33482-2049	A-BLK	GCP	PLR	M-R			3	4	5	6		8	9									18	19	20	OBSOLETE	SEE 33482-2149		
KEY A, BLACK	33482-2050	A-BLK	GCP	PLR	M-R	1	2	3	4	5	6					11	12	13	14	15	16	17	18	19	20	OBSOLETE	SEE 33482-2150		
KEY A, BLACK	33482-2051	A-BLK	GCP	PLR	M-R											11	12	13	14	15	16	17	18	19	20	OBSOLETE	SEE 33482-2151		
KEY A, BLACK	33482-2052	A-BLK	GCP	PLR	M-R	1	2	3	4	5	6	7	8	9	10	11	12	13	14	15	16	17	18	19	20	OBSOLETE	SEE 33482-2152		
KEY A, BLACK	33482-2053	A-BLK	GCP	PLR	M-R			3					8	9									18	19	20	OBSOLETE	SEE 33482-2153		
KEY C, DARK GRAY	33482-2054	C-DG	GCO	PLR	M-R																					OBSOLETE	SEE 33482-2154		
KEY D, STONE GRAY	33482-2055	D-SG	GCO	PLR	M-R																					OBSOLETE	SEE 33482-2155		
KEY B, LIGHT GRAY	33482-2056	B-LG	GCP	PLR	M-R			3		5				9	10											OBSOLETE	SEE 33482-2156		
KEY B, LIGHT GRAY	33482-2057	B-LG	GCP	PLR	M-R			3	4	5				9	10	11	12	13	14	15	6	17	18	19	20	OBSOLETE	SEE 33482-2157		
KEY B, LIGHT GRAY	33482-2058	B-LG	GCP	PLR	M-R			3		5				9	10	11	12	13	14							OBSOLETE	SEE 33482-2158		
KEY B, LIGHT GRAY	33482-2059	B-LG	GCP	PLR	M-R			3	4	5	6		8	9	10				14					19		OBSOLETE	SEE 33482-2159		
KEY A, BLACK	33482-2060	A-BLK	GCP	PLR	M-R				4	5			8				12			15	16	17	18	19	20	OBSOLETE	SEE 33482-2160		
KEY A, BLACK	33482-2061	A-BLK	GCP	PLR	M-R				4	5			8				12					17	18	19	20	OBSOLETE	SEE 33482-2161		
KEY A, YELLOW	33482-2062	A-YL	GCP	PLR	M-R			3			6	7	8	9	10	11	12	13	14				18			OBSOLETE	SEE 33482-2162		
KEY A, YELLOW	33482-2063	A-YL	GCP	PLR	M-R			3			6	7	8	9	10		12	13	14							OBSOLETE	SEE 33482-2163		
KEY A, YELLOW	33482-2064	A-YL	GCP	PLR	M-R			3				7			10				14	15						OBSOLETE	SEE 33482-2164		
KEY A, YELLOW	33482-2065	A-YL	GCP	PLR	M-R			3	4	5	6	7	8	9	10	11	12	13	14	15	16	17	18	19	20	OBSOLETE	SEE 33482-2165		
KEY A, YELLOW	33482-2066	A-YL	GCP	PLR	M-R			3	4	5	6	7	8	9	10	11	12	13	14				18			OBSOLETE	SEE 33482-2166		
KEY A, YELLOW	33482-2067	A-YL	GCP	PLR	M-R			3				7	8	9	10				14							OBSOLETE	SEE 33482-2167		
KEY A, BLACK	33482-2068	A-BLK	GCP	PLR	M-R			3	4	5		7						13		15			18	19		OBSOLETE	SEE 33482-2168		
KEY A, BLACK	33482-2069	A-BLK	GCP	PLR	M-R							7			10				14			17	18	19		OBSOLETE	SEE 33482-2169		
KEY A, BLACK	33482-2070	A-BLK	GCP	PLR	M-R		2	3	4	5									14			17	18	19	20	OBSOLETE	SEE 33482-2170		
KEY A, BLACK	33482-2071	A-BLK	GCP	PLR	M-R											11						17		19		OBSOLETE	SEE 33482-2171		
KEY A, BLACK	33482-2072	A-BLK	GCP	PLR	M-R	1	2	3	4	5	6	7	8			11						17		19		OBSOLETE	SEE 33482-2172		
KEY A, BLACK	33482-2073	A-BLK	GCP	PLR	M-R								8							15						OBSOLETE	SEE 33482-2173		
KEY A, BLACK	33482-2074	A-BLK	GCP	PLR	M-R	1							8		10					15		17				OBSOLETE	SEE 33482-2174		
KEY A, BLACK	33482-2075	A-BLK	GCP	PLR	M-R	1							8	9		11								19	20	OBSOLETE	SEE 33482-2175		
KEY A, BLACK	33482-2076	A-BLK	GCP	PLR	M-R										10									19	20	OBSOLETE	SEE 33482-2176		

molex

MX150 2X10 BLADE SEALED ASSY MAT SEAL
BOM AND PIN OUT SHEET

ASSEMBLY DESCRIPTION	ASSEMBLY PART NUMBER	COMPONENT				BLOCKED TERMINALS																				STATUS	COMMENTS	OPTIONAL ATTATCHMENTS SOLD SEPERATELY	
		THE PRESENCE OF AN ABBREVIATION INDICATES THE PRESENCE OF THAT COMPONENT.				CAVITY WITH A NUMBER INDICATES BLOCKED TERMINAL POSITION CAVITY WITHOUT A NUMBER INDICATES OPEN TERMINAL POSITION																							
		HOUSING KEY/COLOR	GROMMET CAP	PLR	MAT SEAL	1	2	3	4	5	6	7	8	9	10	11	12	13	14	15	16	17	18	19	20			BACKSHELL WITH RIBS	BACKSHELL WITHOUT RIBS
KEY A, BLACK	33482-2077	A-BLK	GCP	PLR	M-B													13			16			19	20	OBSOLETE	SEE 33482-2177		
KEY A, BLACK	33482-2078	A-BLK	GCP	PLR	M-B				4										14							OBSOLETE	SEE 33482-2178		
KEY A, BLACK	33482-2079	A-BLK	GCP	PLR	M-B				4	5	6	7	8	9	10				14	15	16	17	18	19	20	OBSOLETE	SEE 33482-2179		
KEY A, BLACK	33482-2080	A-BLK	GCP	PLR	M-B	1							8		10	11	12	13	14	15		17				OBSOLETE	SEE 33482-2180		
KEY A, BLACK	33482-2081	A-BLK	GCP	PLR	M-B	1		3	4				8	9		11		13	14				18	19	20	OBSOLETE	SEE 33482-2181		
KEY A, BLACK	33482-2082	A-BLK	GCP	PLR	M-B	1		3	4				8	9	10	11		13	14				18	19	20	OBSOLETE	SEE 33482-2182		
KEY A, BLACK	33482-2083	A-BLK	GCP	PLR	M-B	1							8	9	10	11								19	20	OBSOLETE	SEE 33482-2183		
KEY A, BLACK	33482-2084	A-BLK	GCP	PLR	M-B	1								9			12									OBSOLETE	SEE 33482-2184		
KEY A, BLACK	33482-2085	A-BLK	GCP	PLR	M-B	1																		19		OBSOLETE	SEE 33482-2185		
KEY A, BLACK	33482-2086	A-BLK	GCP	PLR	M-B		2	3		5									14					19	20	OBSOLETE	SEE 33482-2186		
KEY A, BLACK	33482-2087	A-BLK	GCP	PLR	M-B	1											12	13						19		OBSOLETE	SEE 33482-2187		
KEY A, BLACK	33482-2088	A-BLK	GCP	PLR	M-B	1				5	6	7	8				12	13		15				19		OBSOLETE	SEE 33482-2188		
KEY A, BLACK	33482-2089	A-BLK	GCP	PLR	M-B	1	2	3	4	5	6	7	8	9			12	13	14	15	16			19		OBSOLETE	SEE 33482-2189		
KEY A, BLACK	33482-2090	A-BLK	GCP	PLR	M-B	1	2	3	4	5	6	7	8	9	10	11	12	13	14	15	16			19	20	OBSOLETE	SEE 33482-2190		
KEY A, BLACK	33482-2101	A-BLK	GCO	PLR	M-B																					SALEABLE			
KEY B, LIGHT GRAY	33482-2102	B-LG	GCO	PLR	M-B																					SALEABLE			
KEY C, BROWN	33482-2103	C-BR	GCO	PLR	M-B																					NOT RECOMMENDED	SEE 33482-2154		
KEY D, GREEN	33482-2104	D-GR	GCO	PLR	M-B																					NOT RECOMMENDED	SEE 33482-2155		
KEY A, BLACK	33482-2106	A-BLK	GCP	PLR	M-B																				20	SALEABLE			
KEY A, BLACK	33482-2107	A-BLK	GCP	PLR	M-B											11										SALEABLE			
KEY A, BLACK	33482-2108	A-BLK	GCP	PLR	M-B				4	5	6	7							14	15	16	17				SALEABLE			
KEY A, BLACK	33482-2109	A-BLK	GCP	PLR	M-B							7									16					SALEABLE			
KEY A, BLACK	33482-2110	A-BLK	GCP	PLR	M-B										10	11	12								20	SALEABLE			
KEY A, BLACK	33482-2111	A-BLK	GCP	PLR	M-B	1	2																		20	SALEABLE			
KEY A, BLACK	33482-2112	A-BLK	GCP	PLR	M-B	1	2								10	11	12								20	SALEABLE			
KEY A, BLACK	33482-2113	A-BLK	GCP	PLR	M-B	1	2								10	11	12	13	14						20	SALEABLE			
KEY A, BLACK	33482-2114	A-BLK	GCP	PLR	M-B			3	4	5									14			17		19		SALEABLE			
KEY A, BLACK	33482-2115	A-BLK	GCP	PLR	M-B			3	4	5												17				SALEABLE			
KEY A, BLACK	33482-2116	A-BLK	GCP	PLR	M-B		2																18	19	20	SALEABLE			
KEY A, BLACK	33482-2117	A-BLK	GCP	PLR	M-B																		18	19	20	SALEABLE			
KEY A, BLACK	33482-2118	A-BLK	GCP	PLR	M-B										10		12	13	14					19		SALEABLE			
KEY A, BLACK	33482-2119	A-BLK	GCP	PLR	M-B			3	4										14			17		19		SALEABLE			
KEY A, BLACK	33482-2120	A-BLK	GCP	PLR	M-B			3	4	5									14			17	18	19	20	SALEABLE			
KEY A, BLACK	33482-2121	A-BLK	GCP	PLR	M-B	1	2	3	4	5					10				14			17	18	19	20	SALEABLE			
KEY A, BLACK	33482-2122	A-BLK	GCP	PLR	M-B			3	4						10				14			17		19		SALEABLE			
KEY A, BLACK	33482-2123	A-BLK	GCP	PLR	M-B										10	11	12			15	16	17			20	SALEABLE			
KEY A, BLACK	33482-2124	A-BLK	GCP	PLR	M-B															15	16	17			20	SALEABLE			
KEY A, BLACK	33482-2125	A-BLK	GCP	PLR	M-B										10				14			17		19		SALEABLE			
KEY A, BLACK	33482-2126	A-BLK	GCP	PLR	M-B				4	5					10				14	15		17		19		SALEABLE			
KEY A, BLACK	33482-2127	A-BLK	GCP	PLR	M-B				4	5					10				14	15		17	18	19		SALEABLE			
KEY A, BLACK	33482-2128	A-BLK	GCP	PLR	M-B	1		3	4	5	6	7	8	9	10	11		13	14	15	16	17	18	19	20	SALEABLE			
KEY A, BLACK	33482-2129	A-BLK	GCP	PLR	M-B				4	5	6	7									16	17				SALEABLE			
KEY A, BLACK	33482-2130	A-BLK	GCP	PLR	M-B			3	4	5								13	14	15			18	19		SALEABLE			
KEY A, BLACK	33482-2131	A-BLK	GCP	PLR	M-B				4			7									16					SALEABLE			
KEY A, BLACK	33482-2132	A-BLK	GCP	PLR	M-B			3	4	5								13		15			18	19		SALEABLE			
KEY A, BLACK	33482-2133	A-BLK	GCP	PLR	M-B										10							17		19		SALEABLE			
KEY A, BLACK	33482-2134	A-BLK	GCP	PLR	M-B																	17	18	19	20	SALEABLE			
KEY A, BLACK	33482-2135	A-BLK	GCP	PLR	M-B																16	17	18	19	20	SALEABLE			
KEY A, BLACK	33482-2136	A-BLK	GCP	PLR	M-B							7		9								17	18	19	20	SALEABLE			
KEY A, BLACK	33482-2137	A-BLK	GCP	PLR	M-B							7		9												SALEABLE			
KEY A, BLACK	33482-2138	A-BLK	GCP	PLR	M-B	1	2	3	4	5	6	7	8	9	10		12					17		19		SALEABLE			
KEY A, BLACK	33482-2139	A-BLK	GCP	PLR	M-B	1	2	3	4	5	6	7	8		10							17		19		SALEABLE			
KEY A, BLACK	33482-2140	A-BLK	GCP	PLR	M-B							7										17			20	SALEABLE			
KEY A, YELLOW	33482-2141	A-YL	GCO	PLR	M-B																					SALEABLE			
KEY A, BLACK	33482-2142	A-BLK	GCP	PLR	M-B										10				14			17	18	19		SALEABLE			
KEY A, BLACK	33482-2143	A-BLK	GCP	PLR	M-B		2		4							11	12		14							SALEABLE			
KEY A, BLACK	33482-2144	A-BLK	GCP	PLR	M-B																		18	19		SALEABLE			
KEY A, BLACK	33482-2145	A-BLK	GCP	PLR	M-B									9	10											SALEABLE			
KEY A, BLACK	33482-2146	A-BLK	GCP	PLR	M-B	1											12			15	16	17	18	19	20	SALEABLE			
KEY A, BLACK	33482-2147	A-BLK	GCP	PLR	M-B			3	4	5					10			13	14	15		17	18	19		SALEABLE			
KEY A, BLACK	33482-2148	A-BLK	GCP	PLR	M-B	1	2	3	4	5	6	7	8	9		11	12	13	14	15	16		18	19	20	SALEABLE			
KEY A, BLACK	33482-2149	A-BLK	GCP	PLR	M-B			3	4	5	6		8	9									18	19	20	SALEABLE			
KEY A, BLACK	33482-2150	A-BLK	GCP	PLR	M-B	1	2	3	4	5	6					11	12	13	14	15	16	17	18	19	20	SALEABLE			
KEY A, BLACK	33482-2151	A-BLK	GCP	PLR	M-B											11	12	13	14	15	16	17	18	19	20	SALEABLE			
KEY A, BLACK	33482-2152	A-BLK	GCP	PLR	M-B	1	2	3	4	5	6	7	8	9	10	11	12	13	14	15	16	17	18	19	20	SALEABLE			
KEY A, BLACK	33482-2153	A-BLK	GCP	PLR	M-B			3					8	9									18	19	20	SALEABLE			
KEY C, DARK GRAY	33482-2154	C-DG	GCO	PLR	M-B																					SALEABLE			
KEY D, STONE GRAY	33482-2155	D-SG	GCO	PLR	M-B																					SALEABLE			
KEY B, LIGHT GRAY	33482-2156	B-LG	GCP	PLR	M-B			3		5				9	10											SALEABLE			
KEY B, LIGHT GRAY	33482-2157	B-LG	GCP	PLR	M-B			3	4	5				9	10	11	12	13	14	15	6	17	18	19	20	SALEABLE			
KEY B, LIGHT GRAY	33482-2158	B-LG	GCP	PLR	M-B			3		5				9	10	11	12	13	14							SALEABLE			
KEY B, LIGHT GRAY	33482-2159	B-LG	GCP	PLR	M-B			3	4	5	6		8	9	10				14					19		SALEABLE			
KEY A, BLACK	33482-2160	A-BLK	GCP	PLR	M-B				4	5			8				12			15	16	17	18	19	20	SALEABLE			
KEY A, BLACK	33482-2161	A-BLK	GCP	PLR	M-B				4	5			8				12					17	18	19	20	SALEABLE			
KEY A, YELLOW	33482-2162	A-YL	GCP	PLR	M-B			3			6	7	8	9	10	11	12	13	14				18			SALEABLE			
KEY A, YELLOW	33482-2163	A-YL	GCP	PLR	M-B			3			6	7	8	9	10		12	13	14							SALEABLE			
KEY A, YELLOW	33482-2164	A-YL	GCP	PLR	M-B			3				7			10				14	15						SALEABLE			
KEY A, YELLOW	33482-2165	A-YL	GCP	PLR	M-B			3	4	5	6	7	8	9	10	11	12	13	14	15	16	17	18	19	20	SALEABLE			
KEY A, YELLOW	33482-2166	A-YL	GCP	PLR	M-B			3	4	5	6	7	8	9	10	11	12	13	14				18			SALEABLE			
KEY A, YELLOW	33482-2167	A-YL	GCP	PLR	M-B			3				7	8	9	10				14							SALEABLE			
KEY A, BLACK	33482-2168	A-BLK	GCP	PLR	M-B			3	4	5		7						13		15			18	19		SALEABLE			
KEY A, BLACK	33482-2169	A-BLK	GCP	PLR	M-B							7			10				14			17	18	19		SALEABLE			
KEY A, BLACK	33482-2170	A-BLK	GCP	PLR	M-B		2	3	4	5									14			17	18	19	20	SALEABLE			
KEY A, BLACK	33482-2171	A-BLK	GCP	PLR	M-B											11						17		19		SALEABLE			
KEY A, BLACK	33482-2172	A-BLK	GCP	PLR	M-B	1	2	3	4	5	6	7	8			11						17		19		SALEABLE			
KEY A, BLACK	33482-2173	A-BLK	GCP	PLR	M-B								8							15						SALEABLE			
KEY A, BLACK	33482-2174	A-BLK	GCP	PLR	M-B	1							8		10					15		17				SALEABLE			
KEY A, BLACK	33482-2175	A-BLK	GCP	PLR	M-B	1							8	9		11								19	20	SALEABLE			
KEY A, BLACK	33482-2176	A-BLK	GCP	PLR	M-B										10									19	20	SALEABLE			
KEY A, BLACK	33482-2177	A-BLK	GCP	PLR	M-B													13			16			19	20	SALEABLE			
KEY A, BLACK	33482-2178	A-BLK	GCP	PLR	M-B				4										14							SALEABLE			
KEY A, BLACK	33482-2179	A-BLK	GCP	PLR	M-B				4	5	6	7	8	9	10				14	15	16	17	18	19	20	SALEABLE			
KEY A, BLACK	33482-2180	A-BLK	GCP	PLR	M-B	1							8		10	11	12	13	14	15		17				SALEABLE			
KEY A, BLACK	33482-2181	A-BLK	GCP	PLR	M-B	1		3	4				8	9		11		13	14				18	19	20	SALEABLE			
KEY A, BLACK	33482-2182	A-BLK	GCP	PLR	M-B	1		3	4				8	9	10	11		13	14				18	19	20	SALEABLE			
KEY A, BLACK	33482-2183	A-BLK	GCP	PLR	M-B	1							8	9	10	11								19	20	SALEABLE			
KEY A, BLACK	33482-2184	A-BLK	GCP	PLR	M-B	1								9			12									SALEABLE			
KEY A, BLACK	33482-2185	A-BLK	GCP	PLR	M-B	1																		19		SALEABLE			
KEY A, BLACK	33482-2186	A-BLK	GCP	PLR	M-B		2	3		5									14					19	20	SALEABLE			
KEY A, BLACK	33482-2187	A-BLK	GCP	PLR	M-B	1											12	13						19		SALEABLE			
KEY A, BLACK	33482-2188	A-BLK	GCP	PLR	M-B	1				5	6	7	8				12	13		15				19		SALEABLE			

molex

MX150 2X10 BLADE SEALED ASSY MAT SEAL
BOM AND PIN OUT SHEET

ASSEMBLY DESCRIPTION	ASSEMBLY PART NUMBER	COMPONENT				BLOCKED TERMINALS																			STATUS	COMMENTS	OPTIONAL ATTATCHMENTS SOLD SEPERATELY	
		THE PRESENCE OF AN ABBREVIATION INDICATES THE PRESENCE OF THAT COMPONENT.				CAVITY WITH A NUMBER INDICATES BLOCKED TERMINAL POSITION CAVITY WITHOUT A NUMBER INDICATES OPEN TERMINAL POSITION																						
		HOUSING KEY/COLOR	GROMMET CAP	PLR	MAT SEAL	1	2	3	4	5	6	7	8	9	10	11	12	13	14	15	16	17	18	19	20			BACKSHELL WITH RIBS	BACKSHELL WITHOUT RIBS
KEY A, BLACK	33482-2189	A-BLK	GCP	PLR	M-B	1	2	3	4	5	6	7	8	9			12	13	14	15	16			19		SALEABLE			
KEY A, BLACK	33482-2190	A-BLK	GCP	PLR	M-B	1	2	3	4	5	6	7	8	9	10	11	12	13	14	15	16			19	20	SALEABLE			
KEY A, BLACK	33482-2191	A-BLK	GCP	PLR	M-B	1	2	3	4	5	6		8		10			13			16			19	20	SALEABLE			
KEY A, BLACK	33482-2192	A-BLK	GCP	PLR	M-B		2						8					13			16			19	20	SALEABLE			
KEY A, BLACK	33482-2193	A-BLK	GCP	PLR	M-B	1	2	3	4	5	6	7	8	9	10			13			16			19	20	SALEABLE			
KEY A, BLACK	33482-2194	A-BLK	GCP	PLR	M-B	1	2	3	4	5	6		8	9	10			13			16			19	20	SALEABLE			
KEY A, BLACK	33482-2195	A-BLK	GCP	PLR	M-B		2											13			16			19	20	SALEABLE			
KEY B, LIGHT GRAY	33482-2196	B-LG	GCP	PLR	M-B	1	2	3	4	5	6	7	8			11						17		19		SALEABLE			
KEY B, LIGHT GRAY	33482-2197	B-LG	GCP	PLR	M-B											11						17		19		SALEABLE			
KEY A, BLACK	33482-2198	A-BLK	GCP	PLR	M-B	1	2	3				7		9							16			19	20	SALEABLE			
KEY A, BLACK	33482-2199	A-BLK	GCP	PLR	M-B	1	2	3	4	5		7	8	9				13	14	15	16			19	20	SALEABLE			
KEY A, BLACK	33482-2200	A-BLK	GCP	PLR	M-B	1	2	3	4	5						11	12		14			17	18	19	20	SALEABLE			
KEY A, BLACK	33482-2201	A-BLK	GCP	PLR	M-B	1	2							9	10	11				15				19	20	SALEABLE			
KEY A, BLACK	33482-2202	A-BLK	GCP	PLR	M-B		2	3	4	5			8	9							16				20	SALEABLE			
KEY A, BLACK	33482-2203	A-BLK	GCP	PLR	M-B	1	2	3						9										19	20	SALEABLE			
KEY A, BLACK	33482-2204	A-BLK	GCP	PLR	M-B				4	5	6						12			15	16	17	18	19		SALEABLE			
KEY B, LIGHT GRAY	33482-2205	B-LG	GCP	PLR	M-B			3	4	5			8	9	10				14					19		SALEABLE			
KEY A, BLACK	33482-2206	A-BLK	GCP	PLR	M-B	1	2	3	4	5	6											17	18	19	20	SALEABLE			
KEY B, LIGHT GRAY	33482-2207	B-LG	GCP	PLR	M-B				4	5	6			9	10											SALEABLE			
KEY B, LIGHT GRAY	33482-2208	B-LG	GCP	PLR	M-B									9	10	11										SALEABLE			
KEY B, LIGHT GRAY	33482-2209	B-LG	GCP	PLR	M-B				4	5	6	7			10							17	18			SALEABLE			
KEY A, BLACK	33482-2210	A-BLK	GCP	PLR	M-B	1								9	10	11	12				16				20	SALEABLE			
KEY A, BLACK	33482-2211	A-BLK	GCP	PLR	M-B	1	2					7			10	11	12						18		20	SALEABLE			
KEY A, BLACK	33482-2213	A-BLK	GCP	PLR	M-B													13						19	20	SALEABLE			
KEY A, BLACK	33482-2214	A-BLK	GCP	PLR	M-B																16					SALEABLE			
KEY A, BLACK	33482-2215	A-BLK	GCP	PLR	M-B		2						8		10							17		19		SALEABLE			
KEY A, BLACK	33482-2216	A-BLK	GCP	PLR	M-B																16				20	SALEABLE			
KEY A, BLACK	33482-2217	A-BLK	GCP	PLR	M-B							7					12					17			20	SALEABLE			
KEY A, BLACK	33482-2218	A-BLK	GCP	PLR	M-B	1	2	3	4	5	6													19	20	SALEABLE			
KEY A, BLACK	33482-2219	A-BLK	GCP	PLR	M-B						6														20	SALEABLE			
KEY A, BLACK	33482-2220	A-BLK	GCP	PLR	M-B	1		3		5		7		9			12		14		16		18		20	SALEABLE			
KEY A, BLACK	33482-2221	A-BLK	GCP	PLR	M-B		2		4		6		8		10	11		13		15		17		19		SALEABLE			
KEY A, BLACK	33482-2222	A-BLK	GCP	PLR	M-B	1	2	3						9							16				20	SALEABLE			
KEY A, BLACK	33482-2223	A-BLK	GCP	PLR	M-B							7					12				16					SALEABLE			
KEY A, BLACK	33482-2224	A-BLK	GCP	PLR	M-B										10				14	15		17		19		SALEABLE			
KEY A, BLACK	33482-2225	A-BLK	GCP	PLR	M-B	1	2	3	4	5	6		8		10							17	18	19	20	SALEABLE			
KEY B, LIGHT GRAY	33482-2226	B-LG	GCP	PLR	M-B															15	16	17			20	SALEABLE			
KEY A, BLACK	33482-2227	A-BLK	GCP	PLR	M-B			3							10			13	14			17	18	19	20	SALEABLE			
KEY A, BLACK	33482-2228	A-BLK	GCP	PLR	M-B			3	4	5	6	7	8	9	10			13	14			17	18	19	20	SALEABLE			
KEY A, BLACK	33482-2229	A-BLK	GCP	PLR	M-B			3	4	5	6	7	8	9	10			13	14			17	18	19		SALEABLE			
KEY A, BLACK	33482-2230	A-BLK	GCP	PLR	M-B			3							10			13	14			17	18	19		SALEABLE			
KEY A, BLACK	33482-2231	A-BLK	GCP	PLR	M-B	1	2	3	4	5	6		8		10								18		20	SALEABLE			
KEY A, BLACK	33482-2232	A-BLK	GCP	PLR	M-B																		18		20	SALEABLE			
KEY B, LIGHT GRAY	33482-2233	B-LG	GCP	PLR	M-B	1	2	3	4	5	6	7	8			11	12	13				17		19		SALEABLE			
KEY B, LIGHT GRAY	33482-2234	B-LG	GCP	PLR	M-B											11	12	13				17		19		SALEABLE			
KEY B, LIGHT GRAY	33482-2235	B-LG	GCP	PLR	M-B		2	3									12	13						19		SALEABLE			
KEY A, BLACK	33482-2236	A-BLK	GCP	PLR	M-B			3	4		6	7	8	9			12	13	14	15	16	17				SALEABLE			
KEY A, BLACK	33482-2237	A-BLK	GCP	PLR	M-B			3	4	5	6	7											18	19		SALEABLE			
KEY A, BLACK	33482-2238	A-BLK	GCP	PLR	M-B					5													18	19		SALEABLE			
KEY A, BLACK	33482-2239	A-BLK	GCP	PLR	M-B			3	4	5	6	7			10								18	19	20	SALEABLE			
KEY A, BLACK	33482-2240	A-BLK	GCP	PLR	M-B					5					10								18	19	20	SALEABLE			
KEY A, BLACK	33482-2241	A-BLK	GCP	PLR	M-B			3	4		6	7	8	9	10		12	13	14	15	16	17			20	SALEABLE			
KEY A, BLACK	33482-2242	A-BLK	GCP	PLR	M-B	1	2	3	4	5	6		8		10											SALEABLE			
KEY A, BLACK	33482-2243	A-BLK	GCP	PLR	M-B	1	2	3					8	9			12	13	14	15	16	17	18	19	20	SALEABLE			
KEY A, BLACK	33482-2244	A-BLK	GCP	PLR	M-B	1	2	3				7	8	9	10		12	13	14	15	16	17	18	19	20	SALEABLE			
KEY A, BLACK	33482-2245	A-BLK	GCP	PLR	M-B		2	3				7	8	9	10		12	13	14	15	16	17	18		20	SALEABLE			
KEY A, BLACK	33482-2246	A-BLK	GCP	PLR	M-B	1	2	3	4	5			8	9			12	13	14	15	16	17	18	19	20	SALEABLE			
KEY A, BLACK	33482-2247	A-BLK	GCP	PLR	M-B	1	2	3	4	5		7	8	9	10		12	13	14	15	16	17	18	19	20	SALEABLE			
KEY A, BLACK	33482-2248	A-BLK	GCP	PLR	M-B		2						8				12	13	14	15		17	18	19	20	SALEABLE			
KEY A, BLACK	33482-2249	A-BLK	GCP	PLR	M-B		2						8									17	18	19	20	SALEABLE			
KEY A, BLACK	33482-2250	A-BLK	GCP	PLR	M-B												12	13	14	15		17	18	19	20	SALEABLE			
KEY A, BLACK	33482-2251	A-BLK	GCP	PLR	M-B	1	2	3	4	5	6	7	8									17	18	19	20	SALEABLE			
KEY A, BLACK	33482-2252	A-BLK	GCP	PLR	M-B	1	2	3	4	5	6	7	8				12	13	14	15		17	18	19	20	SALEABLE			
KEY A, BLACK	33482-2253	A-BLK	GCP	PLR	M-B	1	2	3						9	10	11	12				16				20	SALEABLE			
KEY A, BLACK	33482-2254	A-BLK	GCP	PLR	M-B	1								9	10	11					16			19	20	SALEABLE			
KEY A, BLACK	33482-2255	A-BLK	GCP	PLR	M-B	1	2	3	4	5		7	8	9							16	17	18	19	20	SALEABLE			
KEY A, BLACK	33482-2256	A-BLK	GCP	PLR	M-B	1	2	3				7		9				13	14	15	16			19	20	SALEABLE			
KEY A, BLACK	33482-2257	A-BLK	GCP	PLR	M-B	1	2	3	4	5		7	8	9							16			19	20	SALEABLE			
KEY A, BLACK	33482-2258	A-BLK	GCP	PLR	M-B	1	2	3				7		9	10	11	12				16			19	20	SALEABLE			
KEY A, BLACK	33482-2259	A-BLK	GCP	PLR	M-B	1	2	3	4	5	6		8	9							16				20	SALEABLE			
KEY A, BLACK	33482-2260	A-BLK	GCP	PLR	M-B	1	2	3			6			9	10	11	12	13	14	15	16				20	SALEABLE			
KEY A, BLACK	33482-2261	A-BLK	GCP	PLR	M-B		2						8		10	11				15	16					SALEABLE			
KEY A, BLACK	33482-2262	A-BLK	GCP	PLR	M-B		2						8													SALEABLE			
KEY A, BLACK	33482-2263	A-BLK	GCP	PLR	M-B	1	2	3	4	5	6	7	8		10				14	15		17		19		SALEABLE			
KEY A, BLACK	33482-2264	A-BLK	GCP	PLR	M-B					5																SALEABLE			
KEY A, BLACK	33482-2265	A-BLK	GCP	PLR	M-B																	17	18			SALEABLE			
KEY A, BLACK	33482-2266	A-BLK	GCP	PLR	M-B			3													16	17	18	19	20	SALEABLE			

TABLE OF CONTENTS	
SHEET NO.	SHEET DESCRIPTION
1	NOTES
2	KEY CONFIGURATIONS
3	BLADE SEALED ASSEMBLY
4	SYSTEM PACKAGING
5	BACKSHELL NOTES
6	BACKSHELL
7	BACKSHELL CONFIGURATIONS
8	BOM

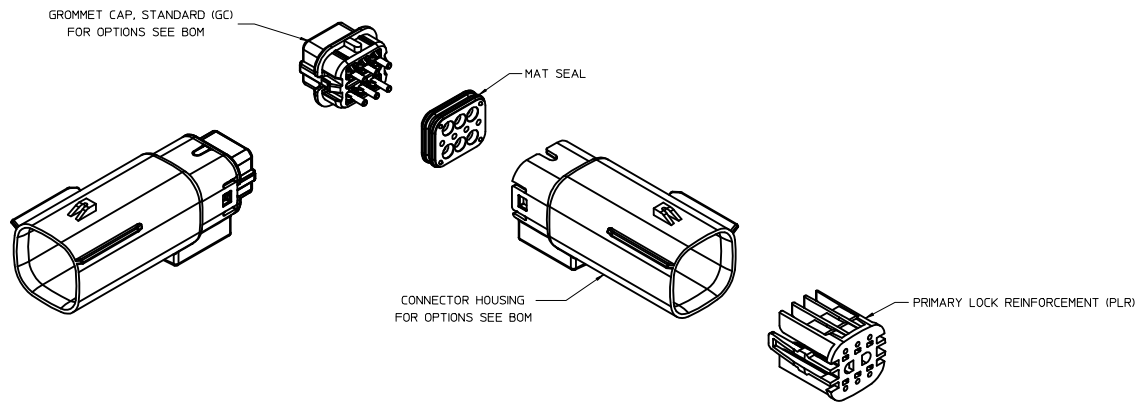

MX150 2X3 BLADE SELAED ASSSEMBLY - STANDARD (STD)

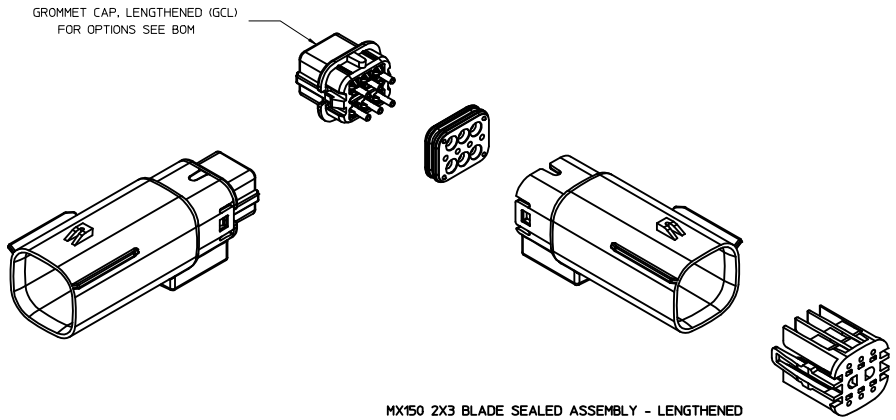

MX150 2X3 BLADE SEALED ASSEMBLY - LENGTHENED
UNLESS COMPONENT NOTED, SEE STANDARD ASSEMBLY

NOTES: VALID UNLESS OTHERWISE SPECIFIED

1. GENERAL:
a. APPLICATION SPECIFICATION SEE: AS-33472-100
CONTAINS: PRODUCT INTRODUCTION, PRODUCT SUMMARY, CONNECTOR ASSEMBLY, PACKAGING INFORMATION, CONNECTOR MATING, SERVICE INSTRUCTIONS, ELECTRICAL CONTINUITY CHECKING, CRIMPING, AND TROUBLESHOOTING.
-DESIGNED TO MATE WITH RECEPTACLE SEALED ASSEMBLY SPECIFIED IN MOLEX CHARTED DRAWING SD-33472-061 AND SD-33472-071.
-FOR 1.5mm BLADE TERMINALS TO BE USED WITH THIS ASSEMBLY SEE MOLEX DRAWING SD-33000-001
- SYSTEM TO BE USED WITH WIRE WITHIN DIAMETER RANGE OF 1.2mm TO 2.69mm.
-ASSEMBLY SHIPPED WITH PLR IN PRE-LOCK POSITION
-IN THE EVENTT THAT THE PLR IS FOUND IN THE SEATED (FINAL LOCK) POSITION, REFER TO MOLEX SPECIFICATION PS-34646-001, AVAILABLE AT www.molex.com <http://www.molex.com>
-ASSEMBLY CONFORMS TO SAE/USCAR-2 REV.4 WITH THE FOLLOWING EXCEPTIONS: TERMINAL INSERTION FORCE FOR WIRE DIAMETER ABOVE 2.5mm NOT EXCEEDING 2.69mm SHALL NOT EXCEED 45 NEWTONS.
b. PRODUCT SPECIFICATION SEE: PS-33472-000
CONTAINS: PRODUCT INTRODUCTION, PRODUCT SUMMARY, RATINGS (CURRENT, TEMPERATURE, SEALING, AND FLAMMABILITY), AND PRODUCT VALIDATION.
c. PACKAGING SPECIFICATION PER MOLEX DRAWING: PK-31300-635
d. PARTS MUST BE IN COMPLIANCE TO MOLEX CHEMICAL SUBSTANCES FOR PRODUCTS AND PACKAGING SPECIFICATION: ES-40000-5016
e. DATA MUST BE SUBMITTED UNDER THE MOLEX PART NUMBER TO IMDS (COMPANY ID#13255)

2. DESIGN - MATERIALS:
a. SEE BOM TABLE

3. DESIGN - GEOMETRY:
a. THIS IS A 100% CAD GENERATED PART. THE CAD MATHEMATICAL DATA IS THE MASTER FOR THIS PART. FOR DIMENSIONAL OR ANY INFORMATION NOT SHOWN ON THIS DRAWING, ANALYZE THE CAD MODEL.
b. GEOMETRIC DIMENSIONS AND TOLERANCES PER ASME Y14.5M - 1994
c. EDGES AND UNDIMENSIONED DETAILS PER ISO13715
d. CORNERS SHOWN AS SHARP TO BE R 0.2 MAX.
e. LETTERING SHALL BE 0.15 MAX RAISED IN 0.25 MAX RECESS PAD. THIS INCLUDES RECYCLING CODE, CAVITY ID, VENDOR IDENTIFICATION, AND CUSTOMER MATERIAL NUMBER.
f. VISUAL DEFECTS SHALL MEET COSMETIC STANDARD PS-45499-002 (Class B).
g. LASER MARKING: TBD

REV	DESCRIPTION
AB	ADD NEW P/N 33482-0653
AA10	UPDATED STATUS AND COMMENTS COLUMNS
AA9	ADD NEW P/N 33482-0652
AA8	ADD NEW P/N 33482-0650 33482-0651
AA7	ADD NEW P/N 33482-0649
AA6	ADD NEW P/N 33482-0648
AA5	ADD NEW P/N 33482-0646 33482-0647
AA4	ADD NEW P/N 33482-0645
AA3	ADD NEW P/N 33482-0644
AA2	CHANGE PART NUMBER STATUS ADD NEW P/N 33482-0641 33482-0642 33482-0643

INSPECTION NUMBER LOG
LAST NUMBER USED: 5
ADDED:
REMOVED: 2

REVISED
EC NO: UAU2016-1297 2016/03/01
DRWN: TYE 2016/03/07
CHKD:
APPR: DENG02
REV AB

QUALITY SYMBOLS: ▽=0 (4 PLACES), ▽=0 (3 PLACES), ▽=0 (2 PLACES), ▽=0 (1 PLACE), 0 PLACE

GENERAL TOLERANCES (UNLESS SPECIFIED)	mm	INCH
4 PLACES	± ---	± ---
3 PLACES	± ---	± ---
2 PLACES	± 0.10	± ---
1 PLACE	± 0.3	± ---
0 PLACE	±	±
ANGULAR ± 3 °		

DRAFT WHERE APPLICABLE MUST REMAIN WITHIN DIMENSIONS

DIMENSION STYLE: MM ONLY
SCALE: 2:1
DESIGN UNITS: METRIC
THIRD ANGLE PROJECTION

DRAWN BY: MDICK DATE: 2011/07/22
CHECKED BY: MDICK DATE: 2011/12/19
APPROVED BY DATE

TITLE: MX150 2X3 BLADE SEALED ASSEMBLY MAT SEAL

molex

MATERIAL NO.: SEE BOM
DOCUMENT NO.: SD-33482-061
SHEET NO.: 1 OF 9
SIZE: D

THIS DRAWING CONTAINS INFORMATION THAT IS PROPRIETARY TO MOLEX INCORPORATED AND SHOULD NOT BE USED WITHOUT WRITTEN PERMISSION

KEY CONFIGURATIONS

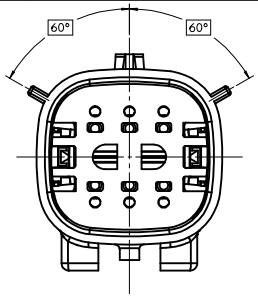

KEY A

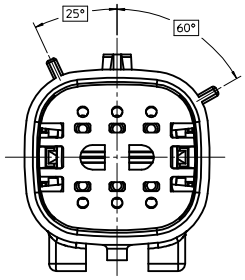

KEY B

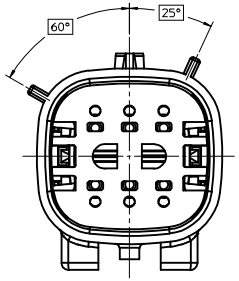

KEY C

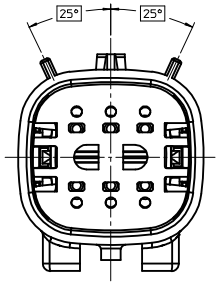

KEY D

REVISED EC NO: UAU2016-1297 DRWN:TYE 2016/03/01 CHKD: APPR: JDENG02 2016/03/07	QUALITY SYMBOLS	GENERAL TOLERANCES (UNLESS SPECIFIED)		DIMENSION STYLE MM ONLY	SCALE 4:1	DESIGN UNITS METRIC	THIRD ANGLE PROJECTION
			mm / INCH	DRAWN BY MDICK DATE 2011/07/22	TITLE MX150 2X3 BLADE SEALED ASSEMBLY MAT SEAL		
		4 PLACES	± --- / ± ---	CHECKED BY MDICK DATE 2011/12/19			
		3 PLACES	± --- / ± ---				
		2 PLACES	± 0.10 / ± ---	APPROVED BY DATE	molex		
		1 PLACE	± 0.3 / ± ---				
		0 PLACE	± / ±				
		ANGULAR ± 3 °		MATERIAL NO. SEE BOM	DOCUMENT NO. SD-33482-061	SHEET NO. 2 OF 9	
AB		DRAFT WHERE APPLICABLE MUST REMAIN WITHIN DIMENSIONS		SIZE D	THIS DRAWING CONTAINS INFORMATION THAT IS PROPRIETARY TO MOLEX INCORPORATED AND SHOULD NOT BE USED WITHOUT WRITTEN PERMISSION		

REV DESCRIPTION

BLADE SEALED ASSEMBLY

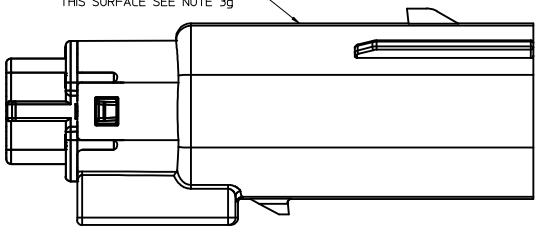

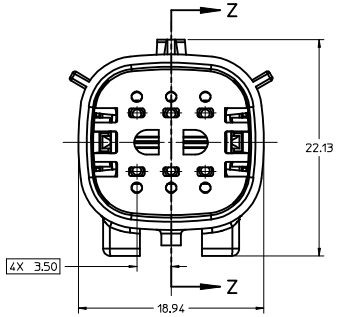

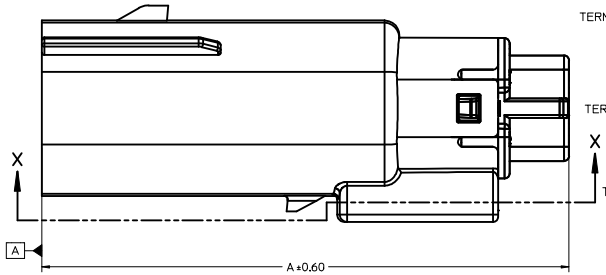

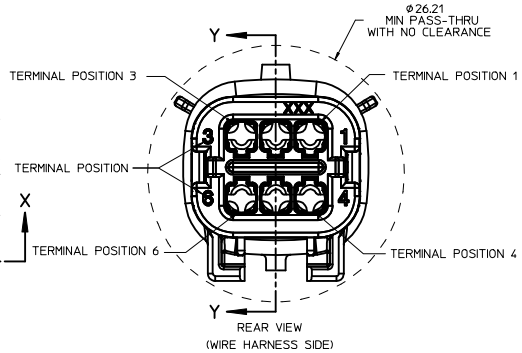

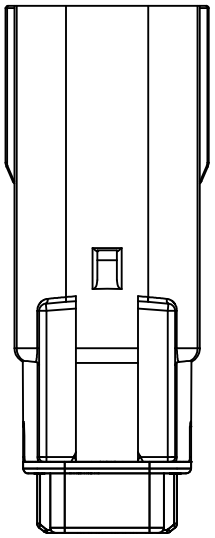

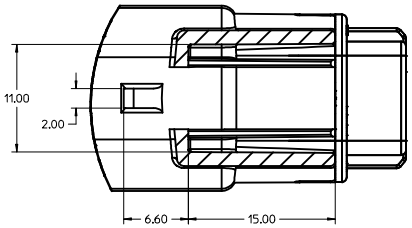

PartialX-X
SCALE 4:1

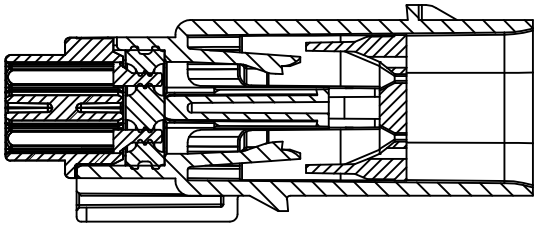

PRIMARY LOCK REINFORCEMENT (PLR) SHOWN
IN PRE-STAGED POSITION
SECTION Z-Z

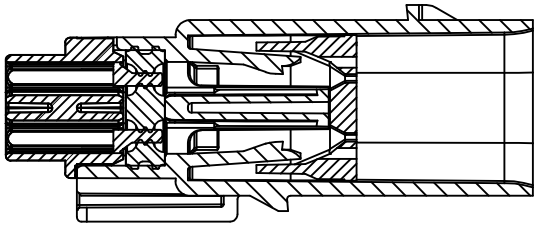

PRIMARY LOCK REINFORCEMENT (PLR) SHOWN
IN FINAL-LOCK POSITION
SECTION Y-Y

CHARTED DIMENSIONS	
CONFIGURATION	A
MX150 2X3 BLADE SEALED ASSEMBLY - STANDARD	53.85
MX150 2X3 BLADE SEALED ASSEMBLY - LENGTHENED	55.85

REVISED
EC NO: UAU2016-1297 2016/03/01
DRWN:TYE
CHKD:
APPR: JDENG02 2016/03/07
DESCRIPTION
REV
AB

QUALITY SYMBOLS
=0
=0
=0

GENERAL TOLERANCES (UNLESS SPECIFIED)

	mm	INCH
4 PLACES	± ---	± ---
3 PLACES	± ---	± ---
2 PLACES	± 0.10	± ---
1 PLACE	± 0.3	± ---
0 PLACE	±	±
ANGULAR ± 3 °		

DRAFT WHERE APPLICABLE MUST REMAIN WITHIN DIMENSIONS

DIMENSION STYLE: MM ONLY
SCALE: 4:1
DESIGN UNITS: METRIC
THIRD ANGLE PROJECTION

DRAWN BY: MDICK DATE: 2011/07/22
CHECKED BY: MDICK DATE: 2011/12/19
APPROVED BY DATE

TITLE: MX150 2X3 BLADE SEALED ASSEMBLY MAT SEAL

molex

MATERIAL NO.: SEE BOM
DOCUMENT NO.: SD-33482-061
SHEET NO.: 3 OF 9
SIZE: D

THIS DRAWING CONTAINS INFORMATION THAT IS PROPRIETARY TO MOLEX INCORPORATED AND SHOULD NOT BE USED WITHOUT WRITTEN PERMISSION

SYSTEM PACKAGING

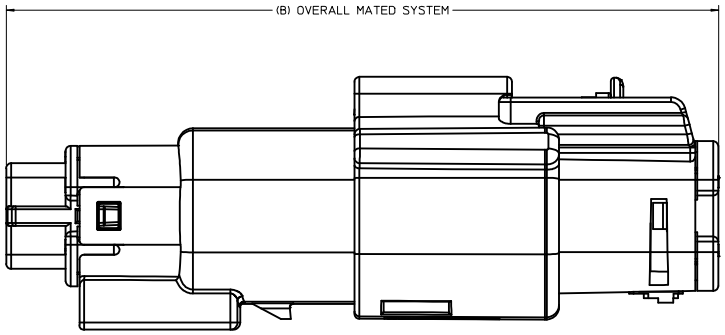

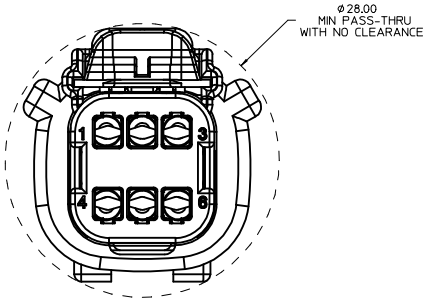

CHARTED DIMENSIONS	
CONFIGURATION	B
MX150 2X3 BLADE SEALED ASSEMBLY - STANDARD	72.78
MX150 2X3 BLADE SEALED ASSEMBLY - LENGTHENED	74.79

CHARTED DIMENSIONS	
CONFIGURATION	C
MX150 2X3 RECEPTACLE SEALED ASSEMBLY WITHOUT CLIPSLOT	30.50
MX150 2X3 RECEPTACLE SEALED ASSEMBLY WITH CLIPSLOT	28.00

REVISED
EC NO: UAU2016-1297 2016/03/01
DRWN: TYE
CHKD:
APPR: JDENG02 2016/03/07
DESCRIPTION
REV AB

QUALITY SYMBOLS
▽ =0
▽ =0
▽ =0
▽ =0

GENERAL TOLERANCES (UNLESS SPECIFIED)

	mm	INCH
4 PLACES	± ---	± ---
3 PLACES	± ---	± ---
2 PLACES	± 0.10	± ---
1 PLACE	± 0.3	± ---
0 PLACE	±	±

ANGULAR ± 3 °
DRAFT WHERE APPLICABLE MUST REMAIN WITHIN DIMENSIONS

DIMENSION STYLE: MM ONLY
SCALE: 4:1
DESIGN UNITS: METRIC
THIRD ANGLE PROJECTION

DRAWN BY: MDICK DATE: 2011/07/22
CHECKED BY: MDICK DATE: 2011/12/19
APPROVED BY DATE

TITLE: MX150 2X3 BLADE SEALED ASSEMBLY MAT SEAL

molex

MATERIAL NO.: SEE BOM
DOCUMENT NO.: SD-33482-061
SHEET NO.: 4 OF 9
SIZE: D

THIS DRAWING CONTAINS INFORMATION THAT IS PROPRIETARY TO MOLEX INCORPORATED AND SHOULD NOT BE USED WITHOUT WRITTEN PERMISSION

BACKSHELL NOTES

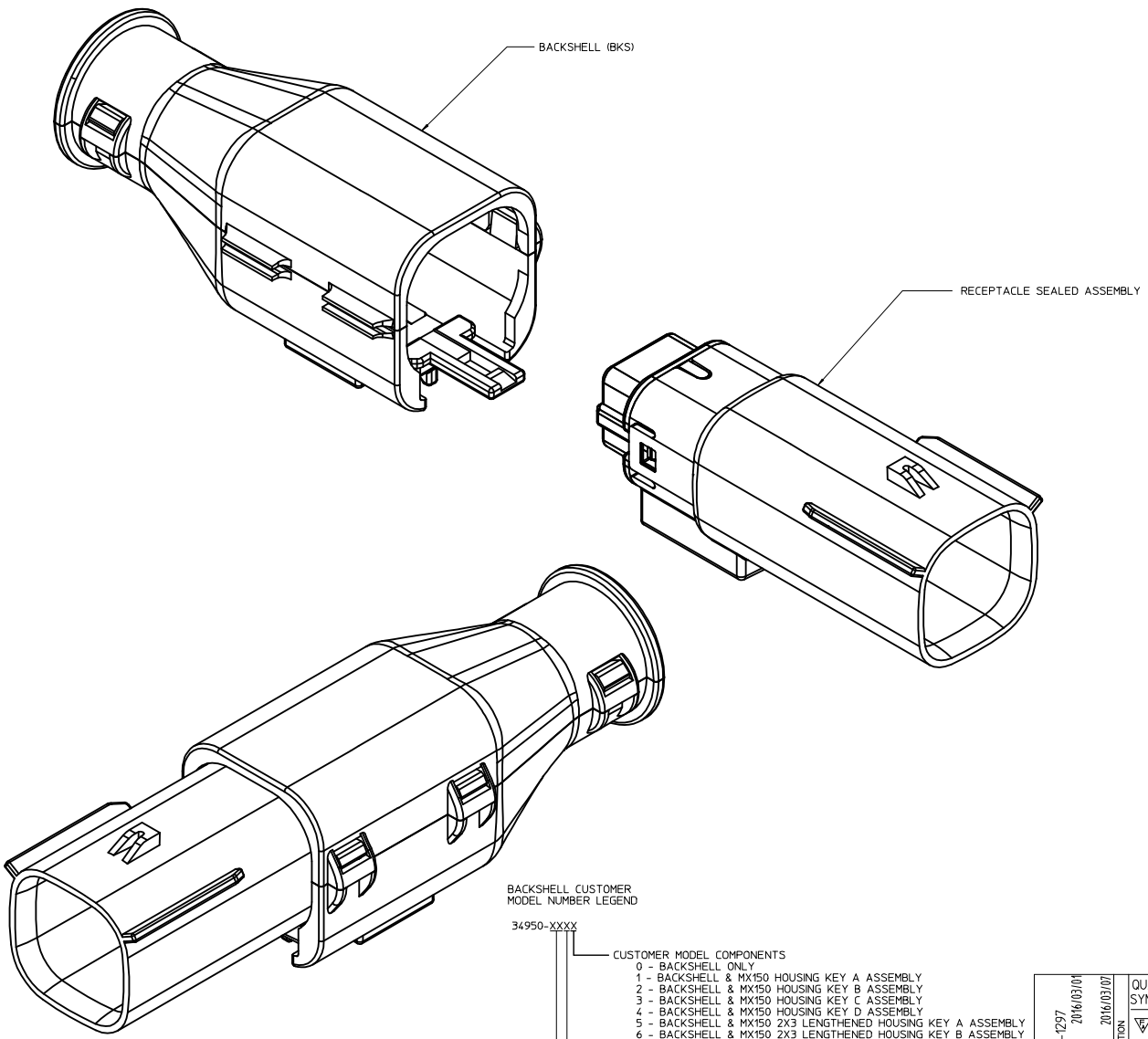

BACKSHELL NOTES: VALID UNLESS OTHERWISE SPECIFIED

1. GENERAL:
a. APPLICATION SPECIFICATION SEE: AS-34951-001
-DESIGNED TO MATE WITH BLADE SEALED ASSEMBLY SPECIFIED IN MOLEX DRAWING SD-33482-061.
-SYSTEM TO BE USED WITH WIRE WITHIN DIAMETER RANGE OF 1.2mm TO 2.69mm.
-COMPONENTS ARE OPTIONAL AND MUST BE PURCHASED SEPARATELY
-BACKSHELL DESIGN IS OWNED BY SCHLEMMER
-FOR ADDITIONAL INFORMATION SEE THE BACKSHELL COMPONENT DRAWING SD-34950-0001.

BACKSHELL CUSTOMER MODEL NUMBER LEGEND

34950-XXXX

CUSTOMER MODEL COMPONENTS
0 - BACKSHELL ONLY
1 - BACKSHELL & MX150 HOUSING KEY A ASSEMBLY
2 - BACKSHELL & MX150 HOUSING KEY B ASSEMBLY
3 - BACKSHELL & MX150 HOUSING KEY C ASSEMBLY
4 - BACKSHELL & MX150 HOUSING KEY D ASSEMBLY
5 - BACKSHELL & MX150 2X3 LENGTHENED HOUSING KEY A ASSEMBLY
6 - BACKSHELL & MX150 2X3 LENGTHENED HOUSING KEY B ASSEMBLY
7 - BACKSHELL & MX150 2X3 LENGTHENED HOUSING KEY C ASSEMBLY
8 - BACKSHELL & MX150 2X3 LENGTHENED HOUSING KEY D ASSEMBLY

BACKSHELL FEATURES
1 - WITH RIBS
2 - WITHOUT RIBS

MX150 CIRCUIT SIZE 04. 06. 08. 12. 16. 20

REV	DESCRIPTION	QUALITY SYMBOLS	GENERAL TOLERANCES (UNLESS SPECIFIED)	mm	INCH
AB	REVISED EC NO: UAU2016-1297 DRWN:TYE 2016/03/01 CHKD: APPR: JDENG02 2016/03/07	$\sqrt{E_A}$ =0	4 PLACES	± ---	± ---
		$\sqrt{E_A}$ =0	3 PLACES	± ---	± ---
		$\sqrt{E_B}$ =0	2 PLACES	± 0.10	± ---
			1 PLACE	± 0.3	± ---
			0 PLACE	±	±
			ANGULAR ± 3 °		
			DRAFT WHERE APPLICABLE MUST REMAIN WITHIN DIMENSIONS		

DIMENSION STYLE: MM ONLY	SCALE: 4:1	DESIGN UNITS: METRIC	THIRD ANGLE PROJECTION
DRAWN BY: MDICK	DATE: 2011/07/22	TITLE: MX150 2X3 BLADE SEALED ASSEMBLY MAT SEAL	
CHECKED BY: MDICK	DATE: 2011/12/19		
APPROVED BY	DATE	molex	
MATERIAL NO.: SEE BOM		DOCUMENT NO.: SD-33482-061	SHEET NO.: 5 OF 9
SIZE: D		THIS DRAWING CONTAINS INFORMATION THAT IS PROPRIETARY TO MOLEX INCORPORATED AND SHOULD NOT BE USED WITHOUT WRITTEN PERMISSION	

tb_frame_D_P_AM_T
Rev. G 2012/01/11

BACKSHELL
THE VIEWS ON THIS SHEET ARE
IN THE CLOSED UN-ASSEMBLED POSITION

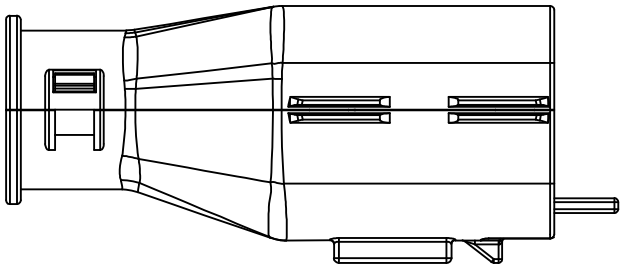

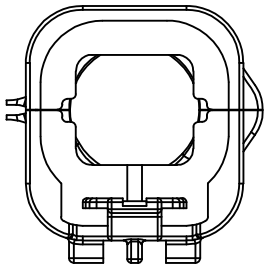

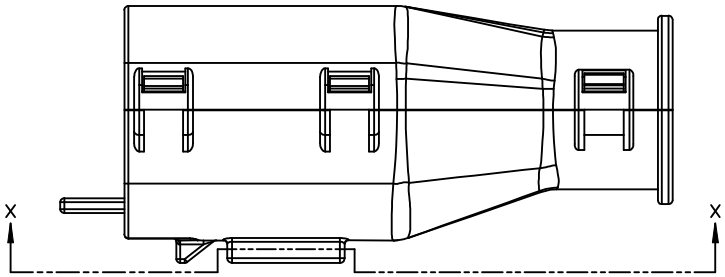

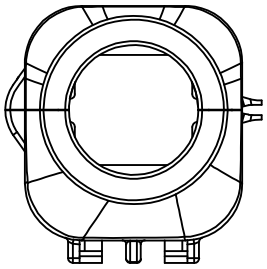

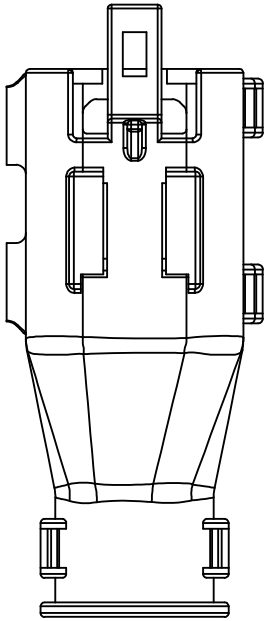

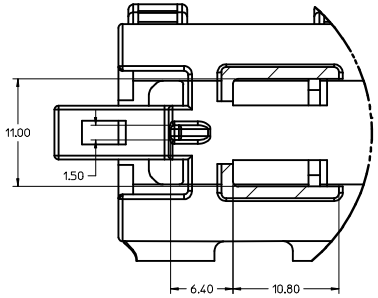

Partial X-X
SCALE 4:1

REVISED EC NO: UAU2016-1297 DRWN:TYE CHKD: APPR: JDENG02	2016/03/01 2016/03/07	DESCRIPTION	REV AB	QUALITY SYMBOLS	GENERAL TOLERANCES (UNLESS SPECIFIED)	DIMENSION STYLE MM ONLY	SCALE 4:1	DESIGN UNITS METRIC	THIRD ANGLE PROJECTION
					mm / INCH	DRAWN BY MDICK DATE 2011/07/22	TITLE MX150 2X3 BLADE SEALED ASSEMBLY MAT SEAL		
				▽=0	4 PLACES ± --- / ± ---	CHECKED BY MDICK DATE 2011/12/19			
				▽=0	3 PLACES ± --- / ± ---	APPROVED BY DATE	molex		
				▽=0	2 PLACES ± 0.10 / ± ---	MATERIAL NO. SEE BOM	DOCUMENT NO. SD-33482-061	SHEET NO. 6 OF 9	
				▽=0	1 PLACE ± 0.3 / ± ---	SIZE D	THIS DRAWING CONTAINS INFORMATION THAT IS PROPRIETARY TO MOLEX INCORPORATED AND SHOULD NOT BE USED WITHOUT WRITTEN PERMISSION		
				▽=0	0 PLACE ± / ±				
					ANGULAR ± 3 °				
					DRAFT WHERE APPLICABLE MUST REMAIN WITHIN DIMENSIONS				

tb_frame_D_P_AM_T
Rev. G 2012/01/11

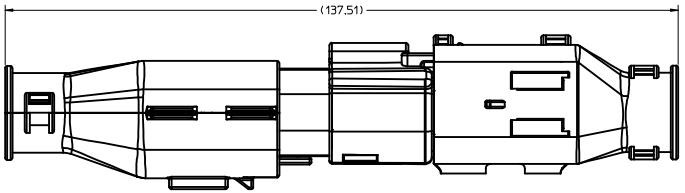

BACKSHELL CONFIGURATIONS

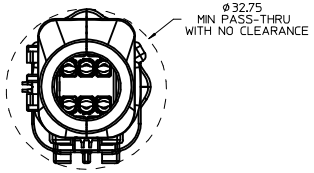

OVERALL MATED SYSTEM WITH BLADE AND RECEPTACLE BACKSHELL

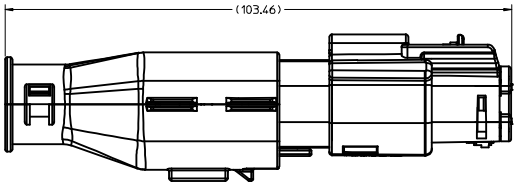

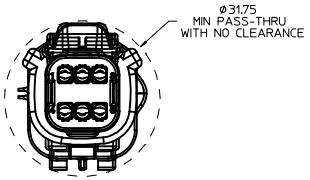

OVERALL MATED SYSTEM WITH BLADE BACKSHELL

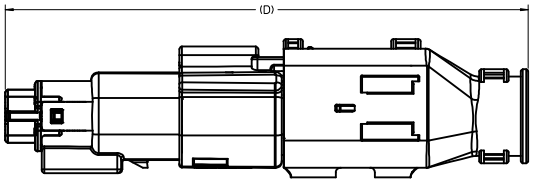

CHARTED DIMENSIONS	
CONFIGURATION	D
MX150 2X3 BLADE SEALED ASSEMBLY - STANDARD	106.83
MX150 2X3 BLADE SEALED ASSEMBLY - LENGTHENED	108.71

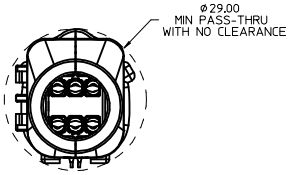

OVERALL MATED SYSTEM WITH RECEPTACLE BACKSHELL

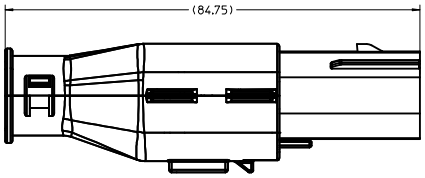

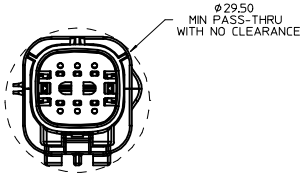

BLADE SEALED ASSEMBLY WITH BLADE BACKSHELL

REVISED
EC NO: UAU2016-1297
DRWN:TYE 2016/03/01
CHKD:
APPR: JDENG02 2016/03/07
AB

REV | DESCRIPTION

QUALITY SYMBOLS
$\overline{E}_A$ =0
$\overline{E}_B$ =0
$\overline{E}_D$ =0

GENERAL TOLERANCES (UNLESS SPECIFIED)

	mm	INCH
4 PLACES	± ---	± ---
3 PLACES	± ---	± ---
2 PLACES	± 0.10	± ---
1 PLACE	± 0.3	± ---
0 PLACE	±	±

ANGULAR ± 3 °

DRAFT WHERE APPLICABLE MUST REMAIN WITHIN DIMENSIONS

DIMENSION STYLE: MM ONLY
SCALE: 2:1
DESIGN UNITS: METRIC
THIRD ANGLE PROJECTION

DRAWN BY: MDICK DATE: 2011/07/22
CHECKED BY: MDICK DATE: 2011/12/19
APPROVED BY DATE

TITLE: MX150 2X3 BLADE SEALED ASSEMBLY MAT SEAL

molex

MATERIAL NO.: SEE BOM
DOCUMENT NO.: SD-33482-061
SHEET NO.: 7 OF 9
SIZE: D

THIS DRAWING CONTAINS INFORMATION THAT IS PROPRIETARY TO MOLEX INCORPORATED AND SHOULD NOT BE USED WITHOUT WRITTEN PERMISSION

tb_frame_D_P_AM_T
Rev. G 2012/01/11

BOM SHEET 1

ASSEMBLY DESCRIPTION	ASSEMBLY PART NUMBER	A	B	C	D	C	D	GC	GCL	1	2	3	4	5	6	STATUS	COMMENTS	BACKSHELL WITH RIBS	BACKSHELL WITHOUT RIBS
KEY D, STONE GRAY	33482-0643						D	GC				3	4			PLANNED OBSOLESCENCE SEE DRAWING SD-33482-0002 FOR REPLACEMENT P/N	REPLACEMENT P/N'S ARE: 33482-06XX TO 33482-36XX	34950-0610	34950-0620
KEY C, DARK GRAY	33482-0642					C		GC				3	4						
KEY D, STONE GRAY	33482-0641						D	GC				3							
KEY A, BLACK	33482-0640	A						GC					4						
KEY A W/ LENGTHENED CAP, BLACK	33482-0639	A							GCL	1	2	3	4	5	6				
KEY C, DARK GRAY	33482-0638					C		GC				3							
KEY A, BLACK	33482-0637	A						GC			2				6				
KEY A W/ LENGTHENED CAP, BLACK	33482-0636	A							GCL			3							
KEY C W/ LENGTHENED CAP, DARK GRAY	33482-0635					C			GCL			3							
KEY D W/ LENGTHENED CAP, STONE GRAY	33482-0634						D		GCL										
KEY C W/ LENGTHENED CAP, DARK GRAY	33482-0633					C			GCL										
KEY B W/ LENGTHENED CAP, LIGHT GRAY	33482-0632		B						GCL										
KEY A W/ LENGTHENED CAP, BLACK	33482-0631	A							GCL										
KEY A, BLACK	33482-0630	A						GC				3			6				
KEY D, STONE GRAY	33482-0629						D	GC											
KEY C, DARK GRAY	33482-0628					C		GC											
KEY A, BLACK	33482-0627	A						GC			2	3		5	6				
KEY A, BLACK	33482-0626	A						GC		1	2	3	4						
KEY B, LIGHT GRAY	33482-0625		B					GC		1				5					
KEY A, BLACK	33482-0624	A						GC							6				
KEY A, BLACK	33482-0623	A						GC						5					
KEY A, BLACK	33482-0622	A						GC					4	5	6				
KEY A, BLACK	33482-0621	A						GC		1			4	5					
KEY A, BLACK	33482-0620	A						GC		1	2	3	4	5	6				
KEY A, BLACK	33482-0619	A						GC			2	3	4	5					
KEY A, BLACK	33482-0618	A						GC						5	6				
KEY A, BLACK	33482-0617	A						GC			2								
KEY A, BLACK	33482-0616	A						GC				3							
VOID KEY	33482-0615																		
KEY D, GREEN	33482-0614				D			GC				3	4						
KEY C, BROWN	33482-0613			C				GC				3	4						
KEY B, LIGHT GRAY	33482-0612		B					GC				3	4						
KEY A, BLACK	33482-0611	A						GC				3	4						
VOID KEY	33482-0610																		
KEY D, GREEN	33482-0609				D			GC				3							
KEY C, BROWN	33482-0608			C				GC				3							
KEY B, LIGHT GRAY	33482-0607		B					GC				3							
KEY A, BLACK	33482-0606	A						GC				3							
VOID KEY	33482-0605																		
KEY D, GREEN	33482-0604				D			GC											
KEY C, BROWN	33482-0603			C				GC											
KEY B, LIGHT GRAY	33482-0602		B					GC											
KEY A, BLACK	33482-0601	A						GC											

BLOCKED TERMINAL

CAVITY WITH A NUMBER INDICATES BLOCKED TERMINAL POSITION
CAVITY WITHOUT A NUMBER INDICATES OPEN TERMINAL POSITION

OPTIONAL ATTACHMENTS SOLD SEPARATELY

DESCRIPTION	COLOR	MATERIAL
STANDARD PLR	NATURAL	SPS/NYLON GF20
MAT SEAL	BURNT ORANGE	INHERENTLY LUBRICATED SILICONE
GROMMET CAP, LENGTHENED	BLACK	SPS/NYLON GF20
GROMMET CAP, STANDARD	BLACK	SPS/NYLON GF20
HOUSING KEYING OPTION D	STONE GRAY	SPS/NYLON GF20
HOUSING KEYING OPTION C	DARK GRAY	SPS/NYLON GF20
HOUSING KEYING OPTION D	GREEN	SPS/NYLON GF20
HOUSING KEYING OPTION C	BROWN	SPS/NYLON GF20
HOUSING KEYING OPTION B	LIGHT GRAY	SPS/NYLON GF20
HOUSING KEYING OPTION A	BLACK	SPS/NYLON GF20

BOM/APPLICABLE COMPONENTS TABLE

TABLE LEGEND	
ABREVIATION	COMPONENT
A	HOUSING KEY A
B	HOUSING KEY B
C	HOUSING KEY C
D	HOUSING KEY D
GC	GROMMET CAP, STANDARD
GCL	GROMMET CAP, LENGTHENED
M	MAT SEAL
P	PLR, STANDARD
BKS	BACKSHELL

REVISED
EC NO: UAU2016-1297 2016/03/01
DRWN: TYE 2016/03/07
CHKD:
APPR: DENG02
DESCRIPTION
REV AB

QUALITY SYMBOLS
=0
=0
=0

GENERAL TOLERANCES (UNLESS SPECIFIED)

	mm	INCH
4 PLACES	± ---	± ---
3 PLACES	± ---	± ---
2 PLACES	± 0.10	± ---
1 PLACE	± 0.3	± ---
0 PLACE	±	±

ANGULAR ± 3 °
DRAFT WHERE APPLICABLE MUST REMAIN WITHIN DIMENSIONS

DIMENSION STYLE: MM ONLY
SCALE
DESIGN UNITS: METRIC
THIRD ANGLE PROJECTION

DRAWN BY: MDICK DATE: 2011/07/22
CHECKED BY: MDICK DATE: 2011/12/19
APPROVED BY DATE

TITLE: MX150 2X3 BLADE SEALED ASSEMBLY MAT SEAL

molex

MATERIAL NO.: SEE BOM
DOCUMENT NO.: SD-33482-061
SHEET NO.: 8 OF 9
SIZE: D

THIS DRAWING CONTAINS INFORMATION THAT IS PROPRIETARY TO MOLEX INCORPORATED AND SHOULD NOT BE USED WITHOUT WRITTEN PERMISSION

BOM SHEET 2

ASSEMBLY DESCRIPTION	ASSEMBLY PART NUMBER	A	B	C	D	C	D	A	GC	GCL	1	2	3	4	5	6	STATUS	COMMENTS	BACKSHELL WITH RIBS	BACKSHELL WITHOUT RIBS
											BLOCKED TERMINAL								OPTIONAL ATTACHMENTS SOLD SEPARATELY	
											CAVITY WITH A NUMBER INDICATES BLOCKED TERMINAL POSITION CAVITY WITHOUT A NUMBER INDICATES OPEN TERMINAL POSITION						PLANNED OBSOLESCENCE SEE DRAWING SD-33482-0002 FOR REPLACEMENT P/N	REPLACEMENT P/N'S ARE: 33482-06XX TO 33482-36XX	34950-0610	34950-0620
(AB) KEY A, BLACK	33482-0653	A							GC			2			5					
KEY A, BLACK	33482-0652	A							GC		1					6				
KEY A, BLACK	33482-0651	A							GC			2		4		6				
KEY A, BLACK	33482-0650	A							GC		1		3		5					
KEY A, BLACK	33482-0649	A							GC					4		6				
KEY C, DARK GRAY	33482-0648					C			GC							6				
KEY B, LIGHT GRAY	33482-0647		B						GC			2	3							
KEY A, BLACK	33482-0646	A							GC			2	3							
KEY A, BLACK	33482-0645	A							GC				3	4	5	6				
KEY A, YELLOW	33482-0644							A	GC											

DESCRIPTION	COLOR	MATERIAL
STANDARD PLR	NATURAL	SPS/NYLON GF20
MAT SEAL	BURNT ORANGE	INHERENTLY LUBRICATED SILICONE
GROMMET CAP, LENGTHENED	BLACK	SPS/NYLON GF20
GROMMET CAP, STANDARD	BLACK	SPS/NYLON GF20
HOUSING KEYING OPTION A	YELLOW	SPS/NYLON GF20
HOUSING KEYING OPTION D	STONE GRAY	SPS/NYLON GF20
HOUSING KEYING OPTION C	DARK GRAY	SPS/NYLON GF20
HOUSING KEYING OPTION D	GREEN	SPS/NYLON GF20
HOUSING KEYING OPTION C	BROWN	SPS/NYLON GF20
HOUSING KEYING OPTION B	LIGHT GRAY	SPS/NYLON GF20
HOUSING KEYING OPTION A	BLACK	SPS/NYLON GF20

BOM/APPLICABLE COMPONENTS TABLE

ENTER DESCRIPTION
EC NO: UAU2016-1297
DRWN:TYE 2016/03/01
CH'KD:
APPR: JDENG02 2016/03/07
REV AB
DESCRIPTION

QUALITY SYMBOLS
$\sqrt{E_A}$ =0
$\sqrt{E_B}$ =0
$\sqrt{E_C}$ =0

GENERAL TOLERANCES (UNLESS SPECIFIED)

	mm	INCH
4 PLACES	± ---	± ---
3 PLACES	± ---	± ---
2 PLACES	± 0.10	± ---
1 PLACE	± 0.3	± ---
0 PLACE	±	±

ANGULAR ± 3 °
DRAFT WHERE APPLICABLE MUST REMAIN WITHIN DIMENSIONS

DIMENSION STYLE: MM ONLY
SCALE: 2:1
DESIGN UNITS: METRIC
THIRD ANGLE PROJECTION

DRAWN BY: MDICK DATE: 2011/07/22
CHECKED BY: MDICK DATE: 2011/12/19
APPROVED BY DATE

TITLE: MX150 2X3 BLADE SEALED ASSEMBLY MAT SEAL

molex

MATERIAL NO.: SEE BOM
DOCUMENT NO.: SD-33482-061
SHEET NO.: 9 OF 9
SIZE: D

THIS DRAWING CONTAINS INFORMATION THAT IS PROPRIETARY TO MOLEX INCORPORATED AND SHOULD NOT BE USED WITHOUT WRITTEN PERMISSION