Mini-Mac Applicator

molex

Application Tooling Specification Sheet

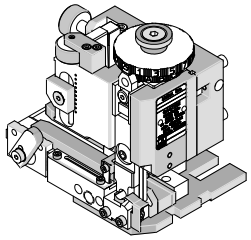

Order No. 63891-3000

FEATURES

- Directly adapts to most automatic wire processing machines
- Applicator designed to industry standard mounting and shut height 135.80mm (5.346")
- Quick set-up time; plus the crimp height, track and feed adjustments can be set without removing the applicator from the press
- Fine adjustment allows users to achieve target with little effort by adjusting in increments of .015mm (.0006") for conductor crimp height and .063mm (.0025") for insulation height
- Independent adjustment rings allow users to quickly adjust the conductor or insulation crimp height without affecting each other

SCOPE

Products: Panel Grounding Clip Crimp Terminal 14-18 AWG.

Terminal Series No.	Terminal Order No.	Wire Size		Insulation Diameter		Strip Length	
		AWG	mm²	mm	In.	mm	In.
42172A-A1	40-06-2003	16	1.30	2.80-3.00	.110-.118	4.75-5.54	.187-.218
42172A-B1	40-06-2005						
42172A-C1	40-06-2013						
42172A-F1	40-06-2017						
42172A-G1	40-06-2024						
42172A-H1	50-29-1597						
42172A-A1	40-06-2003	18	0.80	2.80-3.00	.110-.118	4.75-5.54	.187-.218
42172A-B1	40-06-2005						
42172A-C1	40-06-2013						
42172A-F1	40-06-2017						
42172A-G1	40-06-2024						
42172A-H1	50-29-1597						
42172A-A1	40-06-2003	18 (2)	0.80 (2)	2.80-3.00	.110-.118	4.75-5.54	.187-.218
42172A-B1	40-06-2005						
42172A-C1	40-06-2013						
42172A-F1	40-06-2017						
42172A-G1	40-06-2024						
42172A-H1	50-29-1597						
42172A-A1	40-06-2003	16 (1)-and (1) 18	1.30 and 0.80	2.80-3.00	.110-.118	4.75-5.54	.187-.218
42172A-B1	40-06-2005						
42172A-C1	40-06-2013						
42172A-F1	40-06-2017						
42172A-G1	40-06-2024						
42172A-H1	50-29-1597						

Terminal Series No.	Terminal Order No.	Wire Size		Insulation Diameter		Strip Length	
		AWG	mm²	mm	In.	mm	In.
42172A-A1	40-06-2003	18 (1)-and (1) 20	0.80 and 0.60	2.80-3.00	.110-.118	4.75-5.54	.187-.218
42172A-B1	40-06-2005						
42172A-C1	40-06-2013						
42172A-F1	40-06-2017						
42172A-G1	40-06-2024						
42172A-H1	50-29-1597						
42172-AA1	40-06-2014	14	2.00	3.00-3.45	.118-.136	4.75-5.54	.187-.218
42172-BB1	40-06-2015						
42172-CC1	40-06-2016						
42172-AA1	40-06-2014	16 (2)	1.30 (2)	3.00-3.45	.118-.136	4.75-5.54	.187-.218
42172-BB1	40-06-2015						
42172-CC1	40-06-2016						

DEFINITION OF TERMS

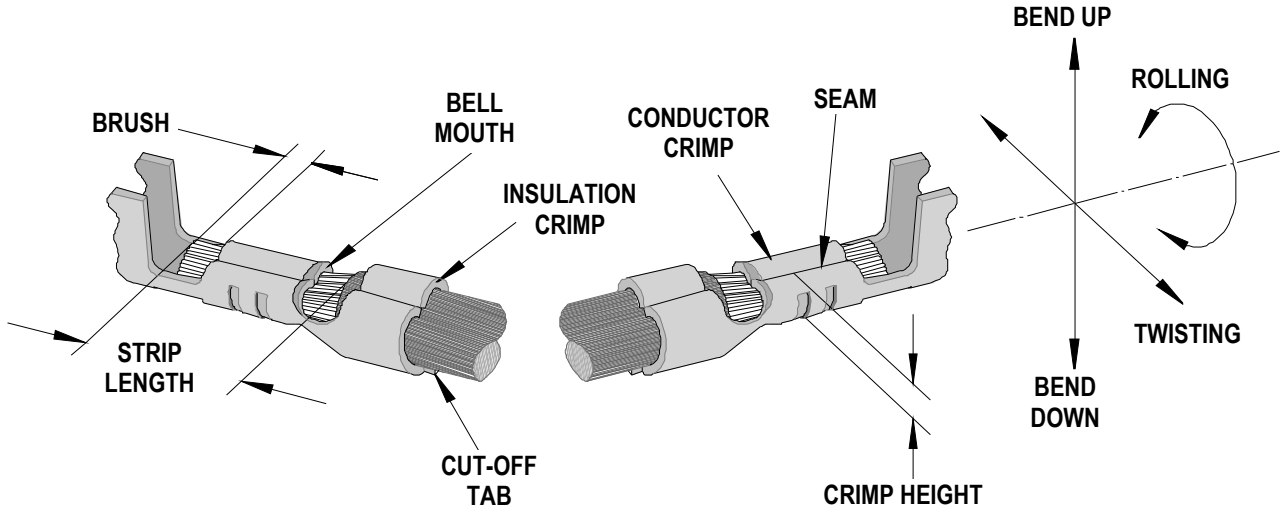

The above terminal drawing is a generic terminal representation. It is not an image of any terminal listed in the scope.

CRIMP SPECIFICATION

Terminal Series No.	Bell mouth		Cut-off Tab Maximum				Conductor Brush	
			Front		Rear			
	mm	In.	mm	In.	mm	In.	mm	In.
42172A	0.51-1.02	.020-.024	0.38	.015	0.25	.010	0.75-2.25	.030-.089
42172	0.51-1.02	.020-.024	0.38	.015	0.25	.010	0.75-2.25	.030-.089

Terminal Series No.	Bend up	Bend down	Twist	Roll	Punch Width (Ref)				Seam
	Degree		Degree		Conductor		Insulation		
					mm	In	mm	In	
42172A	3	3	4	8	3.20	.126	4.30	.169	Seam shall not be open and no wire allowed out of the crimping area
42172	3	3	4	8	3.20	.126	4.30	.169	

After crimping, the crimp profiles should measure the following:

Terminal Series No.	Wire Size		Conductor Crimp Height		Pull Force Minimum	
	AWG	mm^2	mm	In.	N	Lb.
42172A	16	1.30	1.78-1.83	.070-.072	266.7	60.0
	18	0.80	1.60-1.65	.063-.065	155.6	35.0
	18 (2)	0.80 (2)	1.85-1.91	.073-.075	155.6	35.0
	(1)16+(1)18	1.30 and 0.80	1.91-1.96	.075-.077	155.6	35.0
	(1)18 +(1)20	0.80 and 0.60	1.78-1.83	.070-.072	89.0	20.0
42172	14	2.00	2.16-2.21	.085-.087	400.0	90.0
	16 (2)	1.30 (2)	2.21-2.26	.087-.089	266.7	60.0

Pull Force should be measured with no influence from the insulation crimp.
The above specifications are guidelines to an optimum crimp.

PARTS LIST

Mini-Mac Applicator 63891-3000				
Item	**Order No**	**Engineering No.**	**Description**	**Quantity**
Perishable Tooling				
	63891-3070	63891-3070	Tool Kit (All "Y" Items)	REF
1	63830-6001	63830-6001	Conductor Punch	1 Y
2	63445-3180	63445-3180	Conductor Anvil	1 Y
3	63830-6002	63830-6002	Insulation Punch	1 Y
4	63445-4322	63445-4322	Insulation Anvil	1 Y
5	63443-0048	63443-0048	Cut-Off Plunger	1 Y
6	63443-0049	63443-0049	Front Cut-off Plunger Retainer	1 Y
Other Components				
7	11-18-4612	60743A110	Rear Cover Riser	1
8	11-18-4940	60743C122	Front Cover	1
9	63443-0009	63443-0009	Scrap Chute Front	1
10	63443-0024	63443-0024	Lower Tooling Key	1
11	63443-0050	63443-0050	Tooling Washer	1
12	63830-6003	63830-6003	Wire Stop	1
13	63443-1703	63443-1703	Z Spacer	1
14	63443-2214	63443-2214	14.00mm Spacer	1
15	63443-2309	63443-2309	3.45mm Spacer	1
16	63700-0539	63700-0539	Cut-Off Plunger Spring	1
17	63803-5105	63803-5105	Conductor Bushing	1
18	63830-3006	63830-3006	Front Plunger Striker	1
Frame				
19	63801-3201	63801-3201	Top	1
20	63801-3281	63801-3281	Base	1
21	63801-4650	63801-4650	Track	1
Hardware				
22	N/A	N/A	M3 by 6 Long FHCS	1**
23	N/A	N/A	M3 by 6 Long SHCS	2**
24	N/A	N/A	M4 by 6 Long SHCS	1**
25	N/A	N/A	M4 by 12 Long BHCS	2**
26	N/A	N/A	M4 by 50 Long SHCS	2**
27	N/A	N/A	M5 by 12 Long SHCS	1**
28	N/A	N/A	M8 by 20 Long BHCS	1**
29	N/A	N/A	2mm by 8 Long Roll Pin	1**
** Available from an industrial supply company such as MSC (1-800-645-7270).				

Assembly Drawing

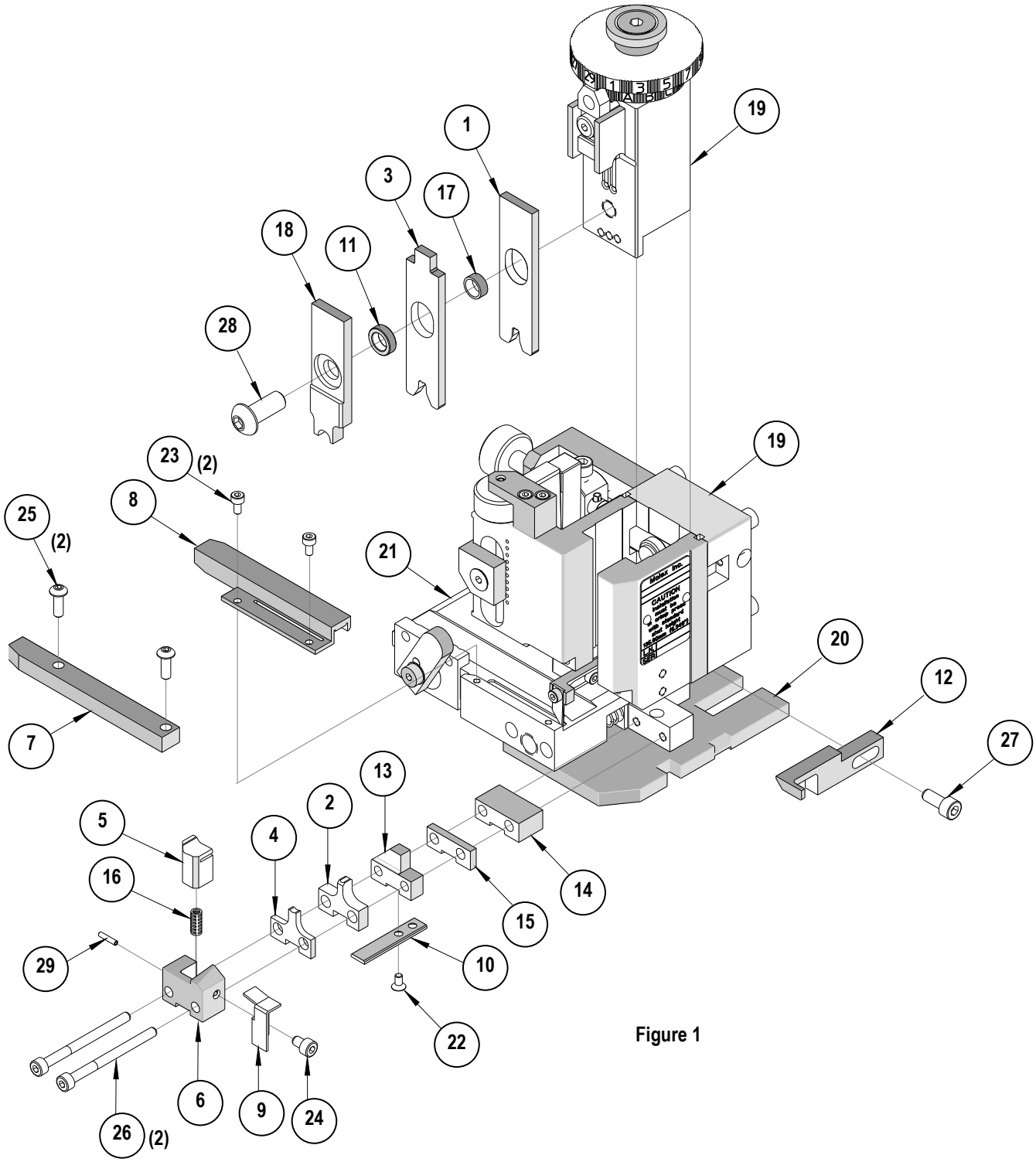

Figure 1

NOTES

1. Molex recommends an extra perishable tooling kit be maintained at your facility.
2. Verify tooling alignment by manually cycling the press with applicator before crimping under power. Check that all screws are tight.
3. Slugs, terminals, dirt, and oil should be kept clear of work area.
4. Wear safety glasses at all times.
5. For recommended maintenance refer to the Mini-Mac Applicator Manual.

CAUTION: This applicator should only be used in a press with a shut height of 135.80 mm (5.346”). Tooling damage could result at a lower setting.

CAUTION: To prevent injury, never operate this applicator without the guards supplied with the press or wire-processing machine in place. Reference the press or wire processing manufacturer’s instruction manual.

CAUTION: Molex crimp specifications are valid only when used with Molex terminals, applicators and tooling.

Contact Information

For more information on Molex application tooling please contact Molex at 1-800-786-6539.

http://www.molex.com