ITEM NO.	CRIMP SIZE	MATERIAL	PLATING	PACKAGING	"D"
42824-4001	18 AWG	.0160/(0.406) THICK BRASS	PRE-TINNED .000020/ (0.00051) MIN. TIN	SUPPLIED ON REEL	.225 (5.72)
42824-4002	12 AWG				

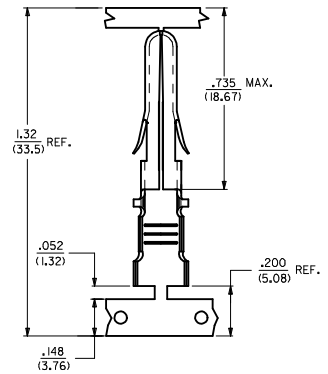

STRIP AND CARRIER LAYOUT

SCALE 4:1

NOTES:

1. MATERIAL: SEE CHART
2. FINISH: SEE CHART
3. PRODUCT SPECIFICATION: PS-40585
4. PACKAGING SPECIFICATION: SEE CHART
5. REELS OF THESE TERMINALS CANNOT HAVE MECHANICAL SPLICES.
6. USING SEAM LINE AS VERTICAL CENTERLINE INDICATOR- MAXIMUM EXCURSION FROM HORIZONTAL CENTERLINE IS INDICATED FOR BOTH LOCK AND STOP TABS.
7. THIS TERMINAL FOR USE IN HOUSING NO'S. 40585-1-5, 40585-3000, 43032-3300,43032-3400, AND 43032-3500.
8. TERMINALS FOR USE WITH STRANDED WIRE.
9. PARTS CONFORM TO CLASS B REQUIREMENTS OF COSMETIC SPECIFICATION PS-45499-002.

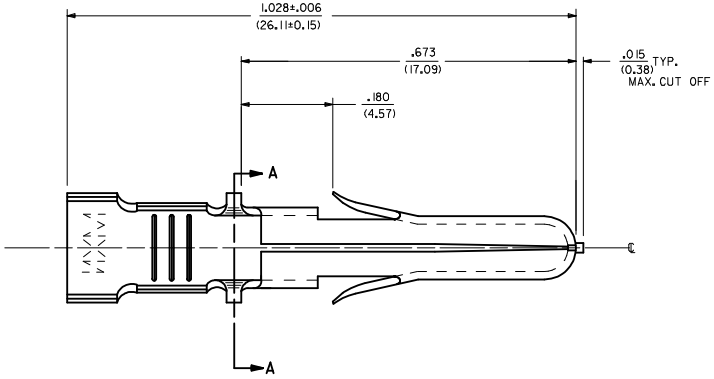

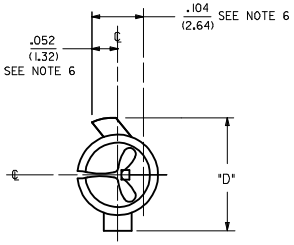

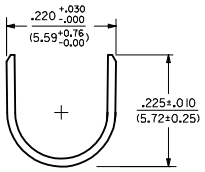

INSULATION CRIMP DETAIL

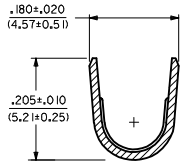

SECTION B-B

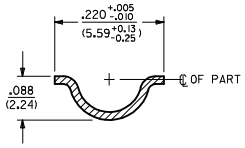

SECTION A-A

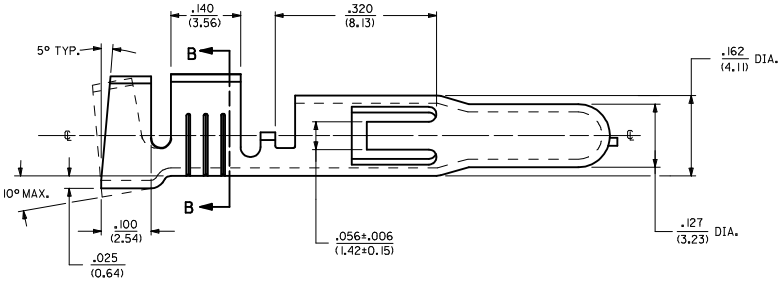

12 AWG TERMINAL SHOWN

REV	DESCRIPTION
C1	REMOVE OBSOLETE EC NO: UCP2016-4886 DRWN:BAPPELDORN 2016/06/24 CHKD:SBB 90/03/08 APPR:FSMITH 2016/07/06

QUALITY SYMBOLS: ▽=0, ▽=0, ▽=0

GENERAL TOLERANCES (UNLESS SPECIFIED)	mm	INCH
4 PLACES	± ---	± ---
3 PLACES	± ---	± .005
2 PLACES	± 0.13	± .01
1 PLACE	± 0.25	± ---
0 PLACE	± ---	± ---
ANGULAR ±1/2°		

DRAFT WHERE APPLICABLE MUST REMAIN WITHIN DIMENSIONS

DIMENSION STYLE: IN/MM	SCALE: 8:1	DESIGN UNITS: INCH	THIRD ANGLE PROJECTION
DRAWN BY: BAPPELDORN	DATE: 2016/06/24	TITLE: TERMINAL PIN .125(3.18) DIA.	
CHECKED BY: SBB	DATE: 90/03/08		
APPROVED BY: FSMITH	DATE: 2016/07/06	molex	
MATERIAL NO.: SEE CHART		DOCUMENT NO.: SD-42824-40**	SHEET NO.: 1 OF 2
SIZE: D	THIS DRAWING CONTAINS INFORMATION THAT IS PROPRIETARY TO MOLEX INCORPORATED AND SHOULD NOT BE USED WITHOUT WRITTEN PERMISSION		

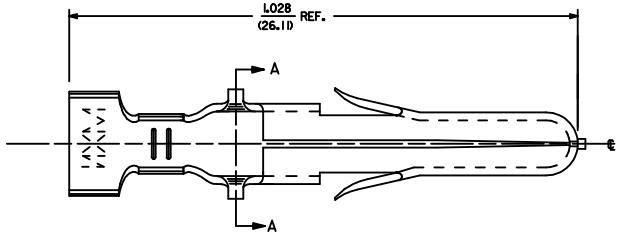

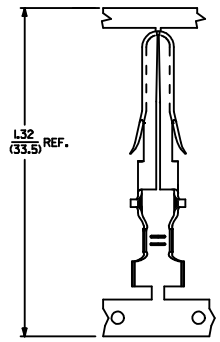

STRIP AND CARRIER LAYOUT
SCALE 4:1

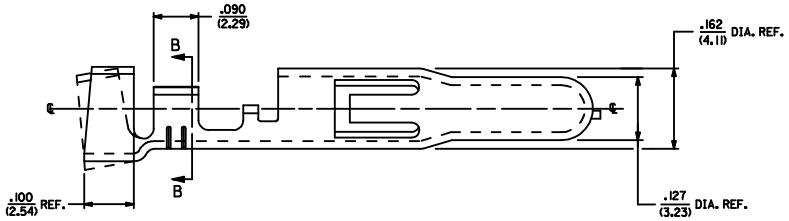

18 AWG TERMINAL SHOWN

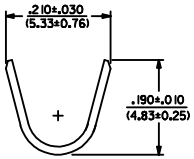

INSULATION CRIMP DETAIL

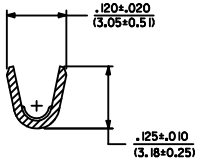

SECTION B-B

SEE SHEET 1 EC NO: UCP2016-4886 DRWN:BAPPELDORN 2016/06/24 CHKD:MKIPPER 2016/06/27 APPR:FSMITH 2016/07/06 DESCRIPTION	QUALITY SYMBOLS	GENERAL TOLERANCES (UNLESS SPECIFIED)		DIMENSION STYLE IN/MM	SCALE 8:1	DESIGN UNITS INCH	THIRD ANGLE PROJECTION		
		mm	INCH	DRAWN BY BAPPELDORN	DATE 2016/06/24	TITLE TERMINAL PIN .125(3.18) DIA.			
	=0	4 PLACES ± ---	± ---	CHECKED BY SBB	DATE 90/03/08				
	=0	3 PLACES ± ---	± .005	APPROVED BY FSMITH	DATE 2016/07/06	molex			
	=0	2 PLACES ± 0.13	± .01	MATERIAL NO. SEE CHART		DOCUMENT NO. SD-42824-40**		SHEET NO. 2 OF 2	
	=0	1 PLACE ± 0.25	± ---						
		0 PLACE ± ---	± ---						
		ANGULAR ±1/2°							
C1	REV	DRAFT WHERE APPLICABLE MUST REMAIN WITHIN DIMENSIONS		SIZE D	THIS DRAWING CONTAINS INFORMATION THAT IS PROPRIETARY TO MOLEX INCORPORATED AND SHOULD NOT BE USED WITHOUT WRITTEN PERMISSION				

tb_frame_D_P_AM_T
Rev. G 2012/01/11