106125

ADAPTER P/N	COLOR	SPLIT SLEEVE MATERIAL
106125-1100	BLUE	ZIRCONIA - ZrO_2
106125-0110	BEIGE	Ph. Bronze
106125-0111*		
106125-1150	GREEN	ZIRCONIA - ZrO_2
106125-0100	BLUE	Ph. Bronze
106125-1110	BEIGE	ZIRCONIA - ZrO_2
106125-0120	AQUA	Ph. Bronze
106125-1170	BLACK	ZIRCONIA - ZrO_2

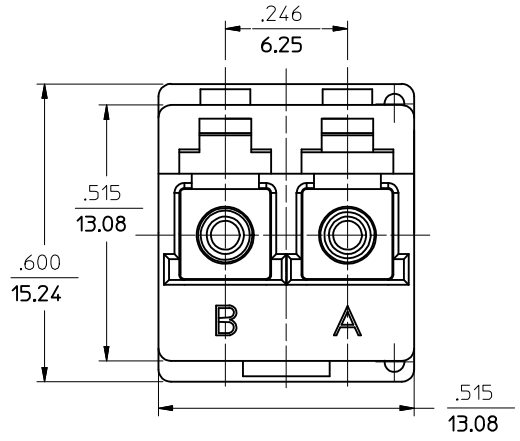

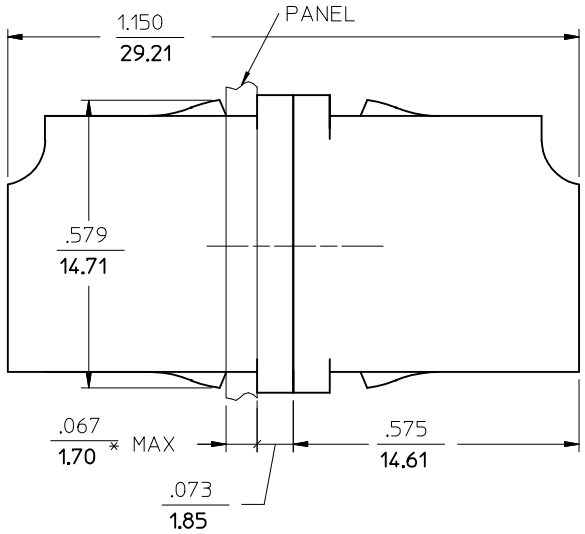

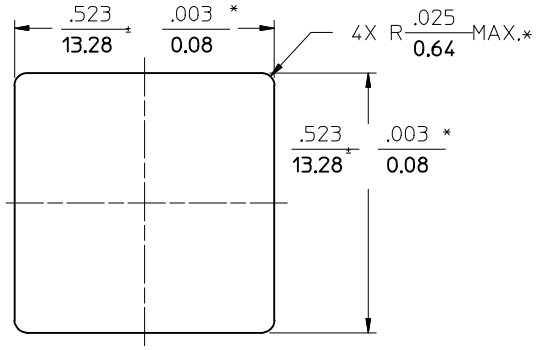

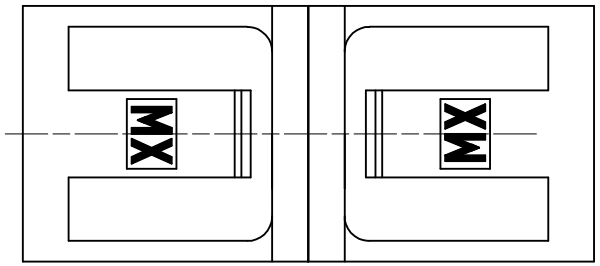

(DUST CAPS ARE NOT SHOWN)

RECOMMENDED PANEL CUTOUT

PANEL THICKNESS .067 / 1.70 MAX.

NOTES:

1. ALL DIMENSIONS ARE FOR REFERENCE ONLY. EXCEPT WHEN MARKED WITH (*).

*2. P/N 106125-0111 SHALL BE BULK PACKED IN QUANTITIES OF 100pcs.

3. ALL POLYMERIC MATERIALS USED IN THIS ADAPTER HAVE UL94 RATING OF V-0.

ENTER DESCRIPTION
EC NO: MF2013-0244
DRWN:KPEYZNER 2012/10/29
CHKD:
APPR: IGUMIN 2012/10/31
DESCRIPTION
REV
C1

QUALITY SYMBOLS
▼=0
Ⓒ=0

GENERAL TOLERANCES (UNLESS SPECIFIED)

	mm	INCH
4 PLACES	± ---	± ---
3 PLACES	± ---	± ---
2 PLACES	± ---	± ---
1 PLACE	± ---	± ---
0 PLACE	±	±

ANGULAR ±1/2°
DRAFT WHERE APPLICABLE MUST REMAIN WITHIN DIMENSIONS

DIMENSION STYLE: IN/MM
SCALE: 4:1
DESIGN UNITS: INCH
THIRD ANGLE PROJECTION

DRAWN BY: PGIBLIN DATE: 2005/10/04
CHECKED BY DATE
APPROVED BY DATE: 2005/10/04

TITLE: LC DUPLEX ADAPTER

molex

MATERIAL NO.: SEE TABLE
DOCUMENT NO.: SD-106125-X1X0
SHEET NO.: 1 OF 1
SIZE: B

THIS DRAWING CONTAINS INFORMATION THAT IS PROPRIETARY TO MOLEX INCORPORATED AND SHOULD NOT BE USED WITHOUT WRITTEN PERMISSION