SD-39100-006

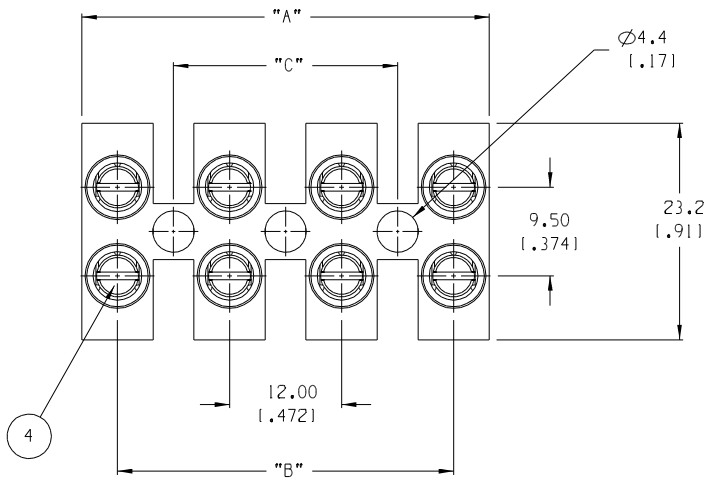

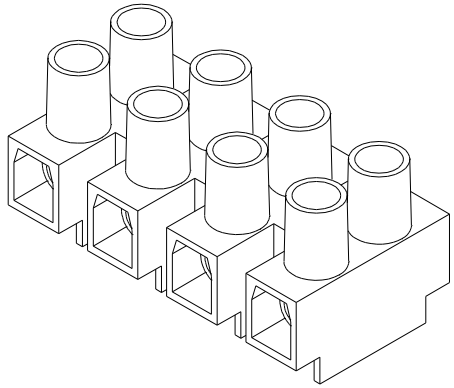

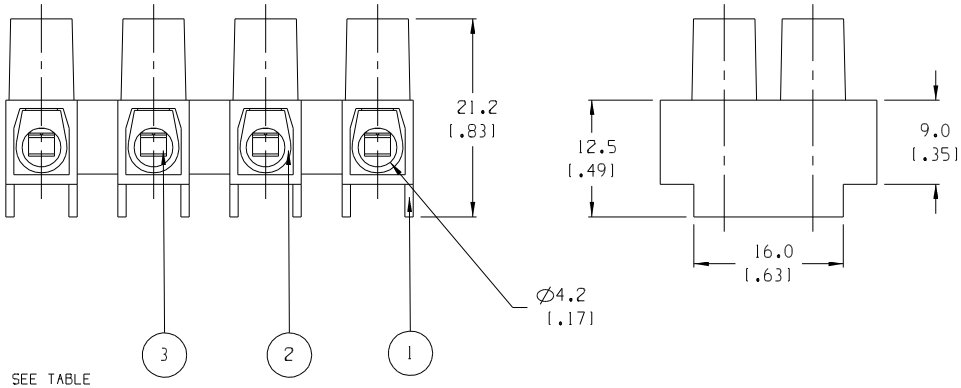

NUMBER OF CIRCUITS	"A" DIM.	"B" DIM.	"C" DIM.	MATERIAL NUMBER
01	8.00 [.315]	N/A	N/A	391001201
02	20.00 [.787]	12.00 [.472]	N/A	391001202
03	32.00 [1.260]	24.00 [.944]	12.00 [.472]	391001203
04	44.00 [1.732]	36.00 [1.416]	24.00 [.945]	391001204
05	56.00 [2.205]	48.00 [1.888]	36.00 [1.417]	391001205
06	68.00 [2.677]	60.00 [2.359]	48.00 [1.890]	391001206
07	80.00 [3.150]	72.00 [2.831]	60.00 [2.362]	391001207
08	92.00 [3.622]	84.00 [3.303]	72.00 [2.835]	391001208
09	104.00 [4.094]	96.00 [3.775]	84.00 [3.307]	391001209
10	116.00 [4.567]	108.00 [4.247]	96.00 [3.780]	391001210
11	128.00 [5.039]	120.00 [4.719]	108.00 [4.252]	391001211
12	140.00 [5.512]	132.00 [5.191]	120.00 [4.724]	391001212

NOTES:

1. MATERIAL: SEE TABLE
2. FINISHES: SEE TABLE
3. PRODUCT SPECIFICATION: NOT REQUIRED
4. PACKAGING: NOT REQUIRED
5. MATES WITH: NONE
6. "XX" REFERS TO THE NUMBER OF CIRCUITS

ITEM	QTY.	DESCRIPTION	MATERIAL	FINISH
4	XX*2	CLAMPING SCREWS, M3.5	STEEL	ZINC
3	XX	WIRE PROTECTOR	BRASS	NICKEL
2	XX	TERMINAL	BRASS	NICKEL
1	1	INSULATOR	NYLON 6	CLEAR

EC NO. RELEASED
DRWN: JF 09-16-04
CH'K:
APPR:
DESCRIPTION
REV A

QUALITY SYMBOLS
MAJOR
CRITICAL C
SPC S

GENERAL TOLERANCES: (UNLESS SPECIFIED)

	mm	INCH
4 PLACES		±.0015
3 PLACES	±.038	±.005
2 PLACES	±.13	±.01
1 PLACE	±.3	
ANGULAR:	±2°	

DRAFT WHERE APPLICABLE MUST REMAIN WITHIN DIMENSIONS

SCALE 2:1
DESIGN UNITS ☐ mm ☒ INCH
THIRD ANGLE PROJECTION

DRAWN BY & DATE J.FARMER 09-16-04
CHECKED BY & DATE
APPROVED BY & DATE
CAD FILENAME 39100-12XX

TITLE: 12MM HIGH PROFILE WITH WIRE PROTECTORS

MOLEX INCORPORATED

MATERIAL NO. SEE CHART
DRAWING NO. SD-39100-006
SHEET NO. 1 OF 1

THIS DRAWING CONTAINS INFORMATION THAT IS PROPRIETARY TO MOLEX INCORPORATED AND SHOULD NOT BE USED WITHOUT WRITTEN PERMISSION.

SIZE B

PROJECT NO. - | SHT - | REV -
DIMENSIONS: ☒ mm/INCH ☐ INCH/mm ☐ mm ONLY
REVISE ON CAD ONLY