78968

THROUGH HOLE

SHEET #	MODULE HEIGHT	LATCH	ROTATION	PCB PATTERN
2	.125	PLASTIC	STANDARD(LEFT)	PATTERN 1
3	.125	PLASTIC	REVERSE(RIGHT)	PATTERN 3
4	.160	PLASTIC	STANDARD(LEFT)	PATTERN 1
5	.160	PLASTIC	STANDARD(LEFT)	PATTERN 2
6	.160	PLASTIC	REVERSE(RIGHT)	PATTERN 3
7	.160	METAL	STANDARD(LEFT)	PATTERN 1
8	.160	METAL	STANDARD(LEFT)	PATTERN 2
9	.160	METAL	REVERSE(RIGHT)	PATTERN 3
10	.190	PLASTIC	STANDARD(LEFT)	PATTERN 1
11	.190	PLASTIC	STANDARD(LEFT)	PATTERN 2
12	.190	PLASTIC	REVERSE(RIGHT)	PATTERN 3
13	.190	METAL	STANDARD(LEFT)	PATTERN 1
14	.190	METAL	STANDARD(LEFT)	PATTERN 2
15	.190	METAL	REVERSE(RIGHT)	PATTERN 3
16	.250	PLASTIC	STANDARD(LEFT)	PATTERN 1
17	.250	PLASTIC	STANDARD(LEFT)	PATTERN 2
18	.250	PLASTIC	REVERSE(RIGHT)	PATTERN 3
19	.250	METAL	STANDARD(LEFT)	PATTERN 1
20	.250	METAL	STANDARD(LEFT)	PATTERN 2
21	.250	METAL	REVERSE(RIGHT)	PATTERN 3
22	.290	PLASTIC	STANDARD(LEFT)	PATTERN 1
23	.290	PLASTIC	STANDARD(LEFT)	PATTERN 2
24	.290	PLASTIC	REVERSE(RIGHT)	PATTERN 3
25	.290	METAL	STANDARD(LEFT)	PATTERN 1
26	.290	METAL	STANDARD(LEFT)	PATTERN 2
27	.290	METAL	REVERSE(RIGHT)	PATTERN 3

SURFACE MOUNT

SHEET #	MODULE HEIGHT	LATCH	ROTATION	PCB PATTERN
28	.160	METAL	STANDARD(LEFT)	PATTERN 4
29	.160	METAL	REVERSE(RIGHT)	PATTERN 5
30	.190	METAL	STANDARD(LEFT)	PATTERN 4
31	.190	METAL	REVERSE(RIGHT)	PATTERN 5
32	.250	METAL	STANDARD(LEFT)	PATTERN 4
33	.250	METAL	REVERSE(RIGHT)	PATTERN 5
34	.290	METAL	STANDARD(LEFT)	PATTERN 4
35	.290	METAL	REVERSE(RIGHT)	PATTERN 5

THROUGH HOLE PATTERNS

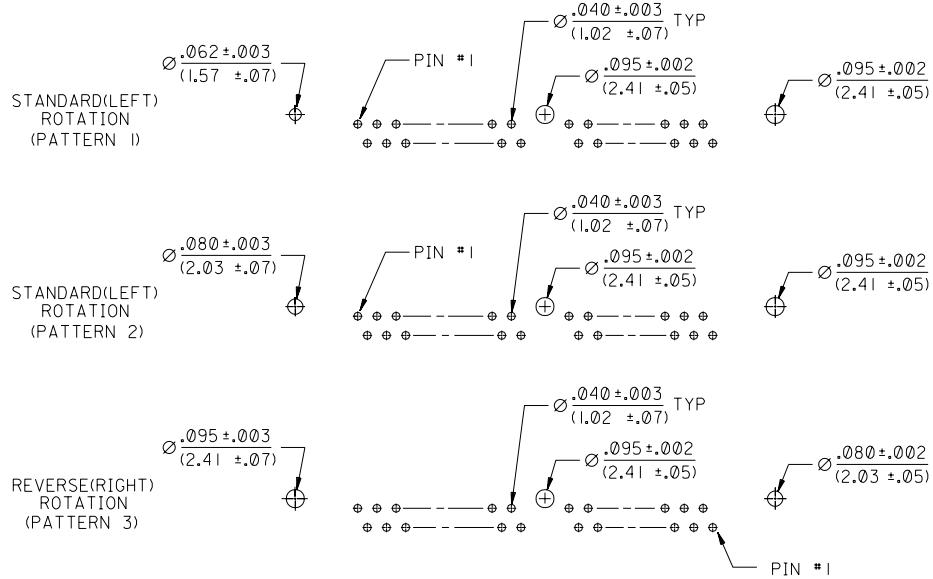

SURFACE MOUNT PATTERNS

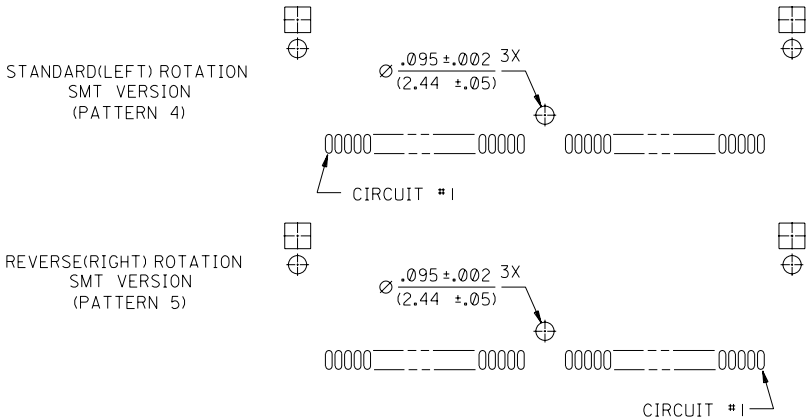

P.C. BOARD HOLE PATTERNS

MFG.	SH.	REV.	LTR.	REVISIONS
		D	D	LEAD FREE UCP2004-1582 RWHITE 04/03/04
		C1	C1	VOID CKT SIZES ECN #UDT1999-0200 DMORGAN 98/10/07
		C	C	CHANGED -8403 PER ECN#U81132 SPIEWAK 97/11/15
		B	B	REVISED PER ECN U50613 GMY 12-22-94
		A	A	RELEASED PER ECR U31660 AMD 11/11/93

DIMENSIONS SHOWN (METRIC) INCH

UNLESS OTHERWISE SPECIFIED TOLERANCES: ANGULAR ± 1/2°

	INCH	METRIC
3 PLACE	± .01	---
2 PLACE	± .014	± 0.25
1 PLACE	---	± 0.36

DRAFT WHERE APPLICABLE MUST REMAIN WITHIN DIMENSIONS

DRWG. BY AMD | CHK'D. BY | APP'D. BY | SCALE 2 : 1

= 0 = 0 REVISE ONLY ON CAD SYSTEM

TITLE SALES ASSEMBLY .05 PITCH RIGHT ANGLE SIMM SOCKET FAMILY

MOLEX INCORPORATED LISLE,ILL. 60532 U.S.A.

SHEET NO. 1 OF 35 | DATE 11/11/93

PART NO. SEE CHART | DRWG. NO. SDA-78968-****

FILE NAME SD78968001 DGN

THIS DRAWING CONTAINS INFORMATION THAT IS PROPRIETARY TO MOLEX INC. AND SHOULD NOT BE USED WITHOUT WRITTEN PERMISSION.

DIV. DA | SIZE C

78968

NOTES:
1. CARD SLOT ACCEPTS .050 +.004/-.003 P.C. BOARDS (MEASURED OVER P.C. PADS).
2. PRODUCT SPEC PS-78968 APPLIES

MATERIALS:
HOUSING- LCP , GLASS FILLED, 94V-0, COLOR: BLACK.
TERMINAL- PHOSPHOR BRONZE
PLATING- SEE CHART
LATCH- STAINLESS STEEL
SMT CLIP- PHOSPHOR BRONZE PLATED WITH TIN

*THE PRIMARY SHIPPING CARTON WILL BE LABELED "COMPLIANT TO RoHS DIRECTIVE 2002/95/EC AND ELV ANNEX II OF DIRECTIVE 2000/53/EC". CARTONS WITHOUT THIS LABEL MAY CONTAIN PRODUCT WITH LEAD.

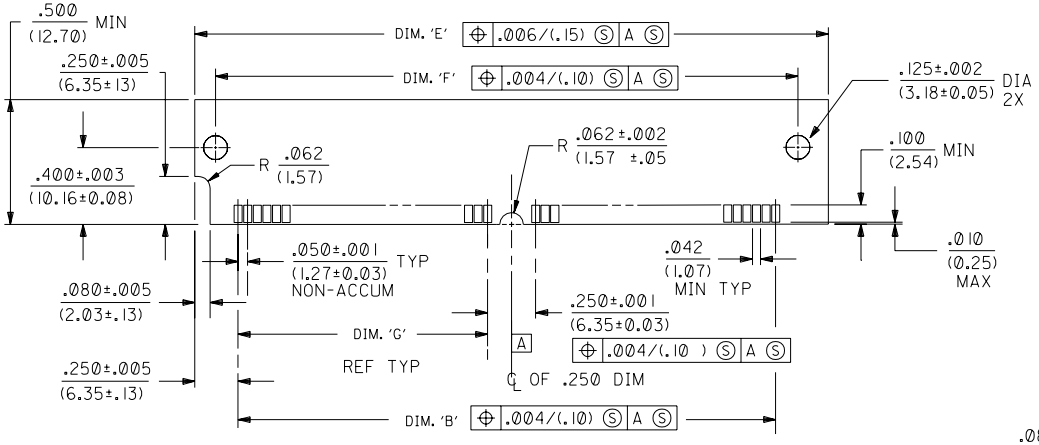

"SIMM" P.C. BOARD LAYOUT

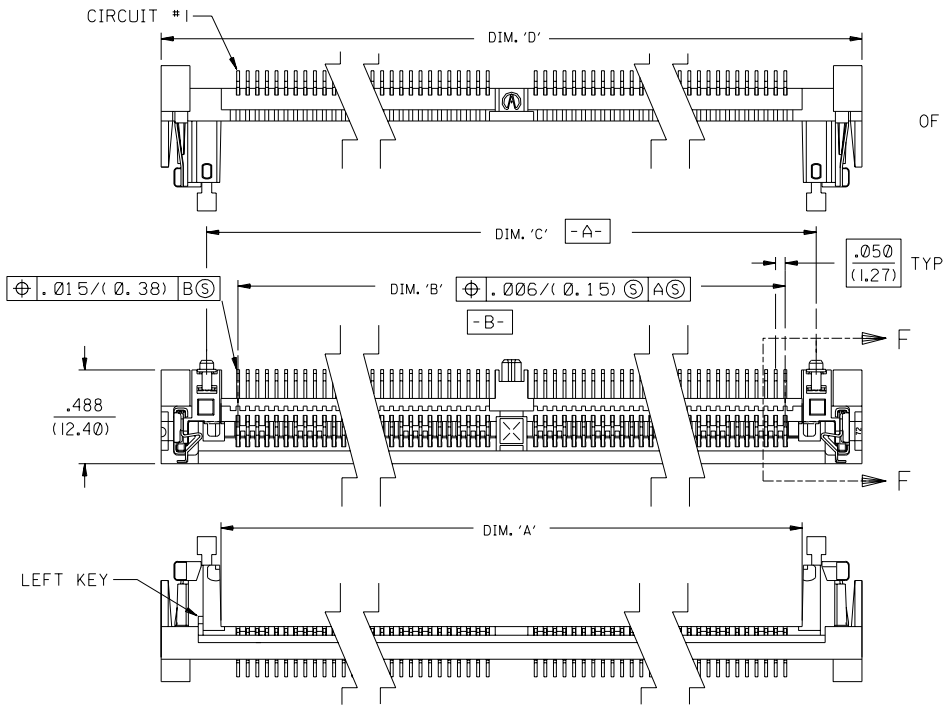

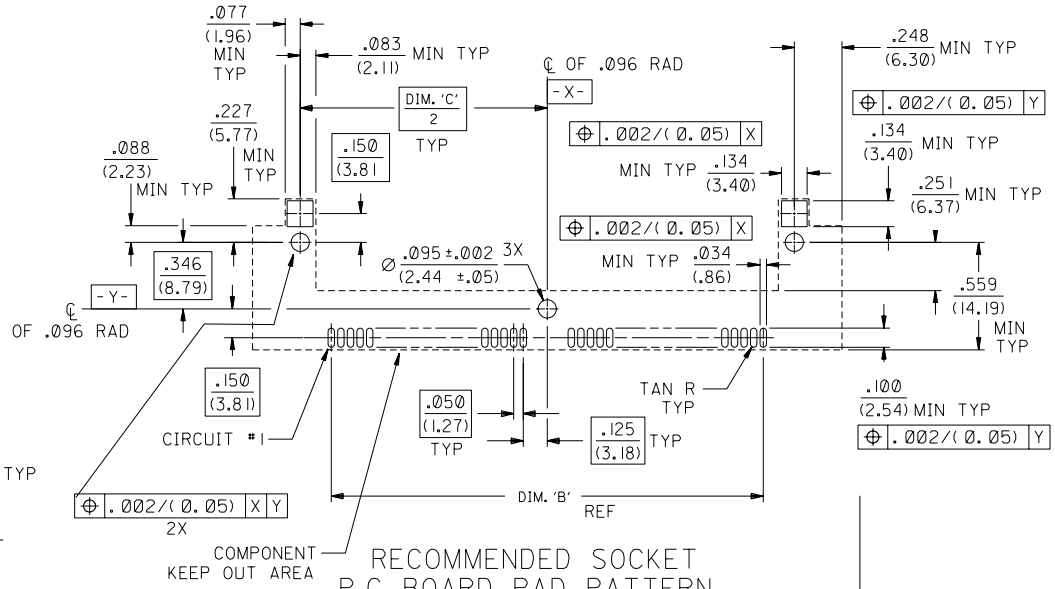

RECOMMENDED SOCKET
P.C. BOARD PAD PATTERN

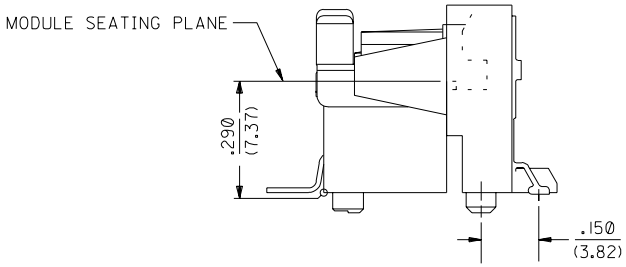

SECTION 'F'-'F'
SCALE 4:1

CIRCUITS	DIM. 'A'	DIM. 'B'	DIM. 'C'	DIM. 'D'	DIM. 'E'	DIM. 'F'	DIM. 'G'	ENG. NUMBER TIN PLATING	EDP NUMBER TIN PLATING	ENG. NUMBER GOLD PLATING	EDP NUMBER GOLD PLATING
40	2.320/(58.93)	2.150/(54.61)	2.474/(62.84)	2.950/(74.93)	2.650/(67.31)	2.384/(60.55)	.950/(24.13)	-4083	15-82-1652	-4084	15-82-1659
64	3.520/(89.41)	3.350/(85.09)	3.674/(93.32)	4.150/(105.41)	3.850/(97.79)	3.584/(91.03)	1.550/(39.37)	-6483	15-82-1653	-6484	15-82-1660
68	3.720/(94.49)	3.550/(90.17)	3.874/(98.40)	4.350/(110.49)	4.050/(102.87)	3.784/(96.12)	1.650/(41.91)	-6883	15-82-1654	-6884	15-82-1661
72	3.920/(99.57)	3.750/(95.25)	4.074/(103.48)	4.550/(115.57)	4.250/(107.95)	3.984/(101.19)	1.750/(44.45)	-7283	15-82-1655	-7293	15-82-0328
80	4.320/(109.73)	4.150/(105.41)	4.474/(113.64)	4.950/(125.73)	4.650/(118.11)	4.384/(111.35)	1.950/(49.53)	-8083	15-82-1656	-8084	15-82-1663
84	4.520/(114.81)	4.350/(109.22)	4.674/(118.72)	5.150/(130.81)	4.850/(123.19)	4.584/(116.43)	2.050/(52.07)	-8483	15-82-1657	-8484	15-82-1664
100	5.320/(135.13)	5.150/(130.81)	5.474/(139.04)	5.950/(151.13)	5.650/(143.51)	5.384/(136.75)	2.450/(62.23)	-1083	15-82-1658	-1084	15-82-1665

MFG.	SH.	REV.	LTR.	REVISIONS
			D	SEE SHEET 1
			A	SEE SHEET 1

▽ = 0 ▼ = 0 REVISE ONLY ON CAD SYSTEM

DIMENSIONS SHOWN (METRIC) INCH
UNLESS OTHERWISE SPECIFIED TOLERANCES: ANGULAR ± 1/2°

	INCH	METRIC
3 PLACE	± .01	---
2 PLACE	± .014	± 0.25
1 PLACE	---	± 0.36

DRAFT WHERE APPLICABLE MUST REMAIN WITHIN DIMENSIONS

DRWG. BY AMD | CHK'D. BY | APP'D. BY | SCALE 2 : 1

TITLE
SALES ASSM, METAL LATCH .290 MOD. HGT., LEFT(STD.) KEY, RIGHT ANGLE SMT SIMM SOCKET

MOLEX INCORPORATED
LISLE, ILL. 60532 U.S.A.

SHEET NO. 34 | DATE 11/11/93

PART NO. SEE CHART | DRWG. NO. SDA-78968-****

FILE NAME SD7896834 DON

THIS DRAWING CONTAINS INFORMATION THAT IS PROPRIETARY TO MOLEX INC. AND SHOULD NOT BE USED WITHOUT WRITTEN PERMISSION.

DIV. DA | SIZE C

78968

78968

NOTES:
1. CARD SLOT ACCEPTS .050 +.004/-.003 P.C. BOARDS (MEASURED OVER P.C. PADS).
2. PRODUCT SPEC PS-78968 APPLIES

MATERIALS:
HOUSING- LCP , GLASS FILLED, 94V-0, COLOR: BLACK.
TERMINAL- PHOSPHOR BRONZE, POST PLATED
30 μ IN. (760 μ M) MINIMUM GOLD IN CONTACT AREA AND
150 μ IN. (3810 μ M) MINIMUM TIN IN TAIL AREA OVER
75 μ IN. (1910 μ M) MINIMUM NICKEL OVERALL.
LATCH- STAINLESS STEEL
SMT CLIP- PHOSPHOR BRONZE PLATED WITH .000200/(.00508) MINIMUM TIN OVER .000050/(.00127) MINIMUM NICKEL OVERALL.

*THE PRIMARY SHIPPING CARTON WILL BE LABELED "COMPLIANT TO RoHS DIRECTIVE 2002/95/EC AND ELV ANNEX II OF DIRECTIVE 2000/53/EC". CARTONS WITHOUT THIS LABEL MAY CONTAIN PRODUCT WITH LEAD.

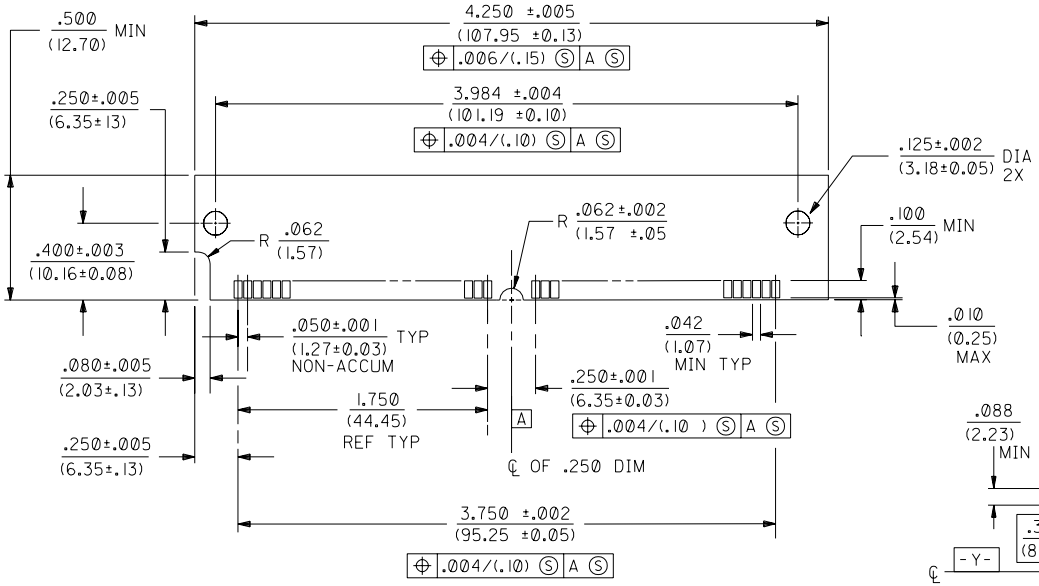

"SIMM" P.C. BOARD LAYOUT

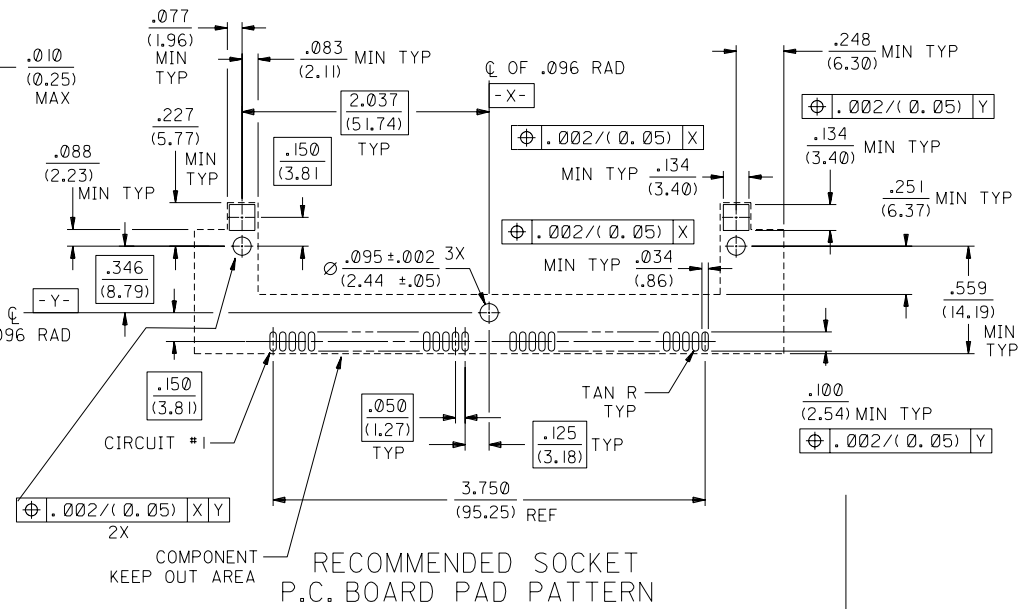

RECOMMENDED SOCKET P.C. BOARD PAD PATTERN

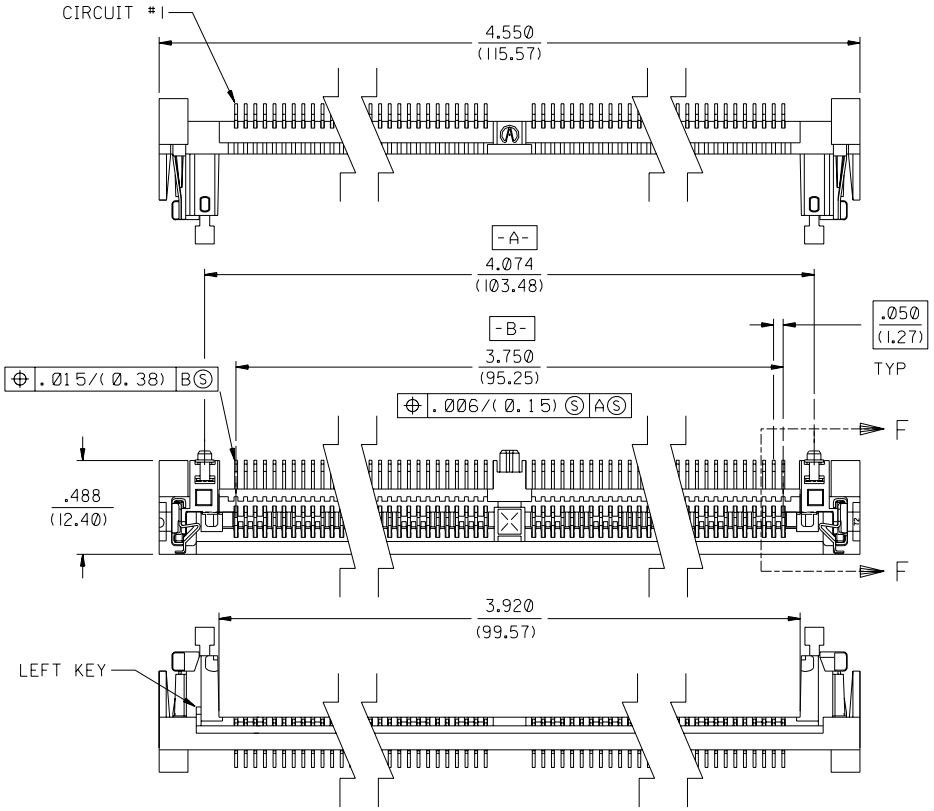

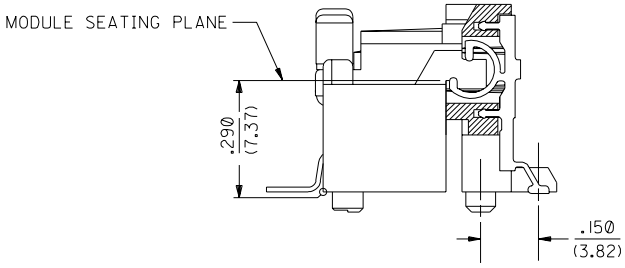

SECTION 'F'-'F'
SCALE 4:1

LTR.	REVISIONS
C	LEAD FREE UCP2004-1582 RWHITE 04/03/04
B	REVISED PER ECN# U60019 GMY 8-2-95
A	ADD EDP # PER ECR U31533 AMD 10-20-93
1	X-RELEASE PER ECR U31378 AMD 9-27-93

MFG. SH. REV. LTR.

▽ = 0 ▼ = 0 REVISE ONLY ON CAD SYSTEM

DIMENSIONS SHOWN (METRIC) INCH
UNLESS OTHERWISE SPECIFIED TOLERANCES: ANGULAR ± 1/2°

	INCH	METRIC
3 PLACE	± .010	---
2 PLACE	± .014	± 0.25
1 PLACE	---	± 0.36

DRAFT WHERE APPLICABLE MUST REMAIN WITHIN DIMENSIONS

TITLE
SALES ASSEMBLY, METAL LATCH LEFT(STD.) KEY, 72 CIRCUIT RIGHT ANGLE, SMT SIMM

molex MOLEX INCORPORATED LISLE, ILL. 60532 U.S.A.

SHEET NO. 1 OF 1 | DATE 9/27/93

PART NO. 15-82-0328 | DRWG. NO. SDA-78968-7293

DRWG. BY AMD | CHK'D. BY | APP'D. BY | SCALE 2 : 1

FILE NAME 789687293 DON

THIS DRAWING CONTAINS INFORMATION THAT IS PROPRIETARY TO MOLEX INC. AND SHOULD NOT BE USED WITHOUT WRITTEN PERMISSION.

DIV. DA | SIZE C

78968