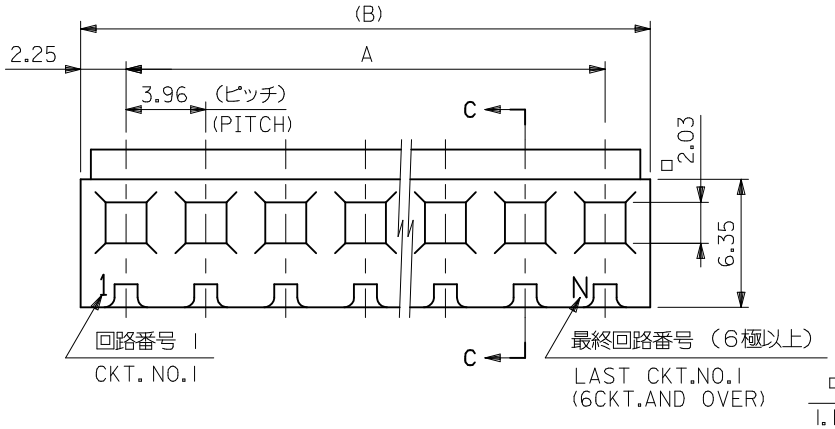

注記 NOTES

1. 適合ターミナル：2478,2578,5167,5168 シリーズ
   APPLICABLE TERMINAL:2478,2578,5167,5168SERIES.
2. 反り：0.2/25.4 MAX.
   CAMBER:0.2/25.4MAX.

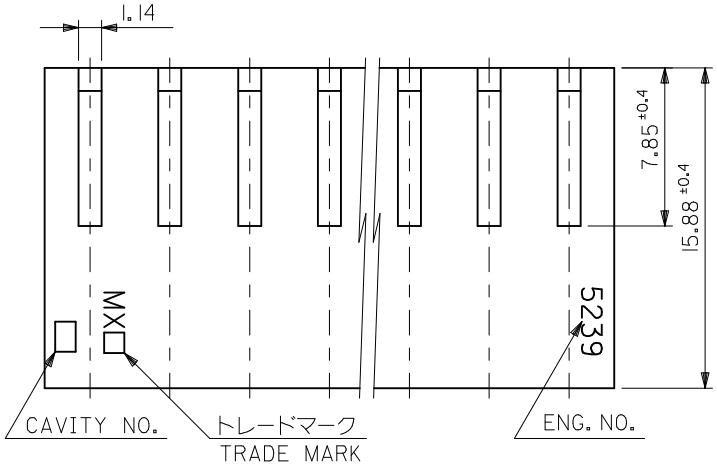

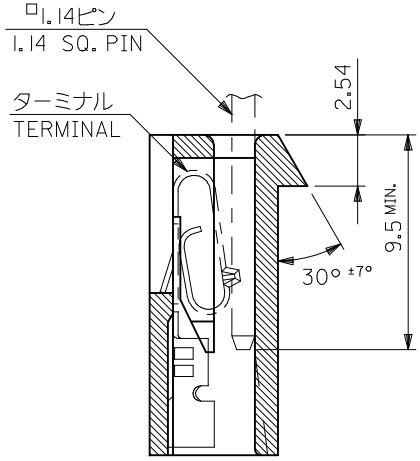

SECT. C-C

VO	B	A	EDP NO.	ENG. NO.	極数 CKT.
	~~79.74~~	~~75.24 ±0.4~~	~~09-52-4204~~	~~5239-20~~	~~20~~
	71.82	67.32 ±0.35	-4184	-18	18
	67.86	63.36 ±0.3	-4174	-17	17
	63.90	59.40 ±0.3	-4164	-16	16
	59.94	55.44 ±0.3	-4154	-15	15
	55.98	51.48 ±0.3	-4144	-14	14
	52.02	47.52 ±0.3	-4134	-13	13
	48.06	43.56 ±0.25	-4124	-12	12
	44.10	39.60 ±0.25	-4114	-11	11
	40.14	35.64 ±0.25	-4104	-10	10
	36.18	31.68 ±0.2	-4094	-09	9
	32.22	27.72 ±0.2	-4084	-08	8
	28.26	23.76 ±0.2	-4074	-07	7
	24.30	19.80 ±0.2	-4064	-06	6
	20.34	15.84 ±0.15	-4054	-05	5
	16.38	11.88 ±0.15	-4044	-04	4
	12.42	7.92 ±0.15	-4034	-03	3
	8.46	3.96 ±0.1	09-52-4024	5239-02	2

MATERIAL
ナイロン66 UL94V-2
NYLON66

REVISED
EC NO: J2013-1101 2013/04/04
DRWN:YWAKE 2013/04/04
CHKD:
APPR:YOITO
DESCRIPTION
REV

GENERAL TOLERANCES (UNLESS SPECIFIED)

10 UNDER	±0.2
10 OVER 30 UNDER	±0.25
30 OVER	±0.3
ANGULAR ±3 °	

DRAFT WHERE APPLICABLE MUST REMAIN WITHIN DIMENSIONS

DIMENSION STYLE: MM ONLY
SCALE: 4:1
DESIGN UNITS: METRIC
THIRD ANGLE PROJECTION

DRAWN BY: H.HIRAMOTO DATE: 1989/09/15
CHECKED BY: S.A/ M.F DATE: 1996/04/10
APPROVED BY: M.FUKUSHIMA DATE: 1996/04/10

TITLE: KK 3.96 RECEPTACLE HSG

molex

MATERIAL NO.: SEE CHART
DOCUMENT NO.: SD-5239-N
SHEET NO.: 1 OF 1
SIZE: A3

THIS DRAWING CONTAINS INFORMATION THAT IS PROPRIETARY TO MOLEX INCORPORATED AND SHOULD NOT BE USED WITHOUT WRITTEN PERMISSION