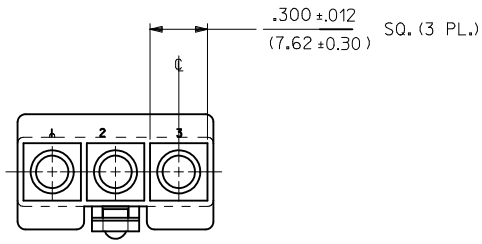

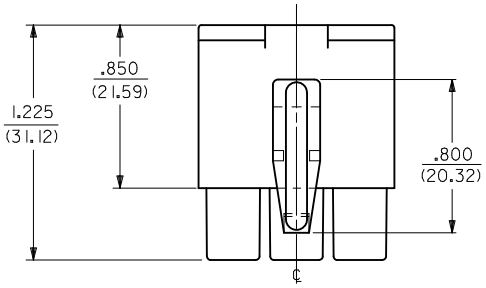

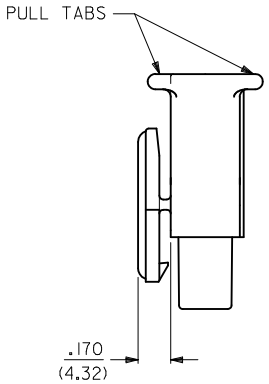

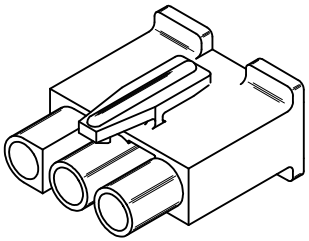

RECEPTACLE

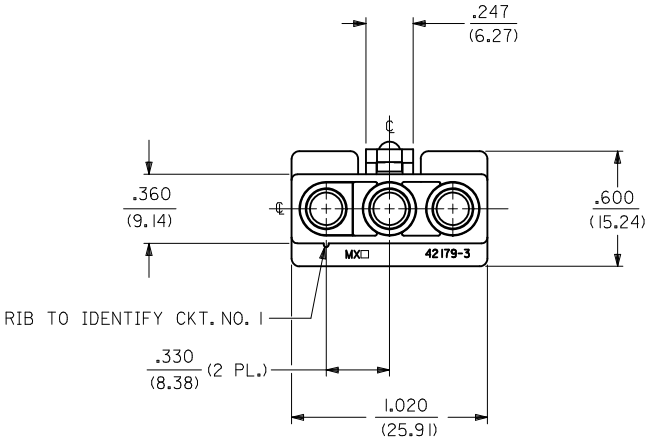

REV	DESCRIPTION
H	REVISE DIMENSION EC NO: UCP2011-3247 DRWN:AELHAG 2011/04/20 CHKD:JBELL 2011/04/20 APPR:FSMITH 2011/05/02

QUALITY SYMBOLS
F A =0
F C =0
F P =0

GENERAL TOLERANCES (UNLESS SPECIFIED)

	mm	INCH
4 PLACES	± ---	± ---
3 PLACES	± ---	± .007
2 PLACES	± 0.18	± .010
1 PLACE	± 0.25	± ---
ANGULAR ±1/2°		

DRAFT WHERE APPLICABLE MUST REMAIN WITHIN DIMENSIONS

DIMENSION STYLE: IN/MM
SCALE: 2:1
DESIGN UNITS: INCH
THIRD ANGLE PROJECTION

DRAWN BY: AELHAG DATE: 2011/04/20
CHECKED BY: JBELL DATE: 2011/04/20
APPROVED BY: DATE

TITLE: .125/(3.17) HOUSING, PLUG AND RECEPTACLE, 3 CKT .330/)8.38) CTR

molex MOLEX INCORPORATED

MATERIAL NO.: SEE CHART
DOCUMENT NO.: SD-42179-3*
SHEET NO.: 1 OF 3
SIZE: C

THIS DRAWING CONTAINS INFORMATION THAT IS PROPRIETARY TO MOLEX INCORPORATED AND SHOULD NOT BE USED WITHOUT WRITTEN PERMISSION

F	3	H
E	2	H
F	1	H

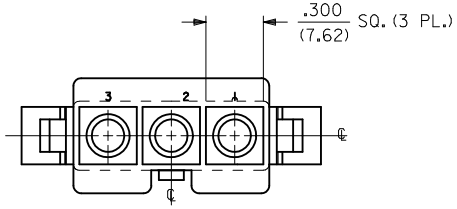

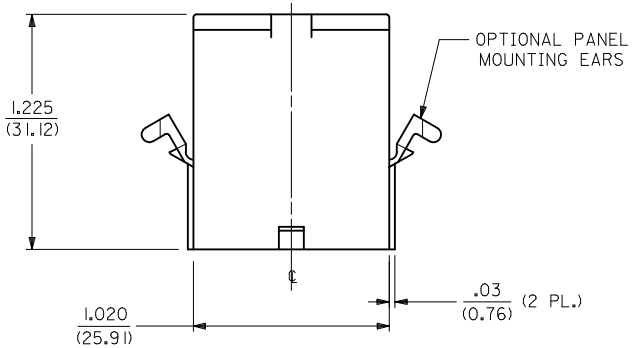

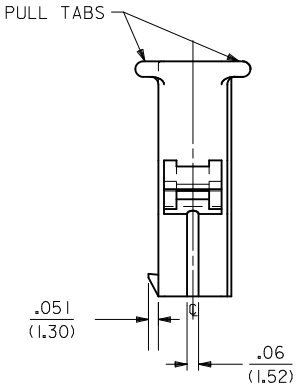

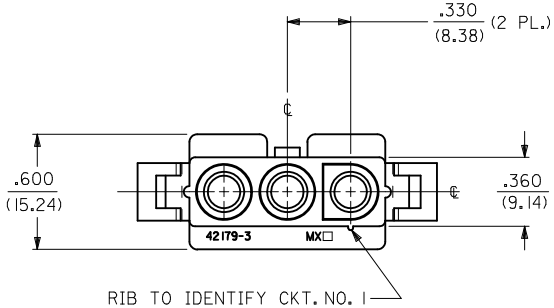

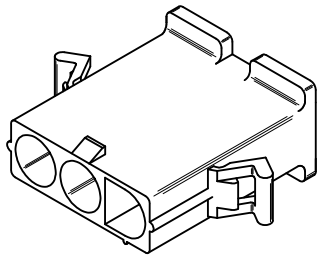

PLUG

UPDATE TITLE BLOCK
EC NO: UCP2011-3247 2011/04/20
DRWN:AELHAG 2011/04/20
CHKD:JBELL 2011/05/02
APPR:FSMITH
DESCRIPTION
REV

QUALITY SYMBOLS
F/A =0
F/C =0
F/P =0

GENERAL TOLERANCES (UNLESS SPECIFIED)

	mm	INCH
4 PLACES	± ---	± ---
3 PLACES	± ---	± .007
2 PLACES	± 0.18	± .010
1 PLACE	± 0.25	± ---
ANGULAR ±1/2°		

DRAFT WHERE APPLICABLE MUST REMAIN WITHIN DIMENSIONS

DIMENSION STYLE: IN/MM
SCALE: 2:1
DESIGN UNITS: INCH
THIRD ANGLE PROJECTION

DRAWN BY: AELHAG DATE: 2011/04/20
CHECKED BY: JBELL DATE: 2011/04/20
APPROVED BY: DATE

TITLE: .125 HOUSING, PLUG AND RECEPTACLE, 3 CIRCUIT, .330 CENTERS

molex MOLEX INCORPORATED

MATERIAL NO.: SEE CHART
DOCUMENT NO.: SD-42179-3*
SHEET NO.: 2 OF 3
SIZE: C

THIS DRAWING CONTAINS INFORMATION THAT IS PROPRIETARY TO MOLEX INCORPORATED AND SHOULD NOT BE USED WITHOUT WRITTEN PERMISSION

PLUG		RECEPTACLE	
PART NO.	ENG. NO.	PART NO.	ENG. NO.
03-12-2036	42179-3P1	03-12-1036	42179-3R1
03-12-2035	42179-3P	50-29-1608	42179-3R1-B

LEGEND:

42179-3***-*

CIRCUIT SIZE:

HOUSING TYPE:

P = PLUG

R = RECEPTACLE

MOUNTING EAR OPTION:

BLANK = WITH PREBENT EARS AND RIBS, PLUG ONLY

1 = WITHOUT EARS

COLOR:

BLANK = TRANSLUCENT NATURAL COLOR

AM=AMBER BK=BLACK BU=BLUE

BN=BROWN GY=GRAY GN=GREEN

OR=ORANGE RD=RED YW=YELLOW

MATERIAL:

BLANK = MATERIAL CODE A.

B = MATERIAL CODE B.

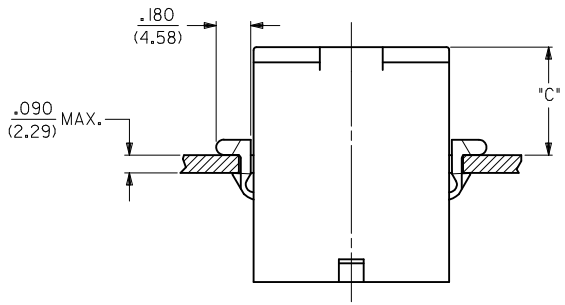

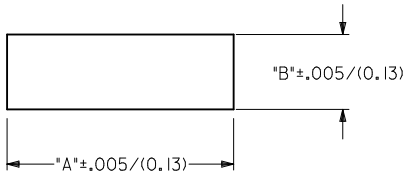

RECOMMENDED HOLE CUTOUT

HOUSING	DIM. "A"	DIM. "B"	DIM. "C"
PLUG	1.181/(30.00)	.440/(11.18)	.57/(14.5)

NOTES:

1. PART ACCEPTS A MAXIMUM .250/(6.35) INSULATION DIA.
2. FOR USE WITH ALL MOLEX .125/(3.17) DIAMETER SERIES TERMINAL EXCEPT THE 1219/1220 SERIES.
3. MATERIAL CODES:-
   A- NYLON 6/6, U.L. 94V-2.
   B- NYLON 6/6, U.L. 94V-0.

UPDATE TITLE BLOCK
EC NO: UCP2011-3247
DRWN:AELHAG 2011/04/20
CH'KD:JBELL 2011/04/20
APPR:FSMITH 2011/05/02
DESCRIPTION
REV

QUALITY SYMBOLS
=0
=0
=0

GENERAL TOLERANCES (UNLESS SPECIFIED)

	mm	INCH
4 PLACES	± ---	± ---
3 PLACES	± ---	± .007
2 PLACES	± 0.18	± .010
1 PLACE	± 0.25	± ---
ANGULAR ±1/2°		

DRAFT WHERE APPLICABLE MUST REMAIN WITHIN DIMENSIONS

DIMENSION STYLE: IN/MM

SCALE: 2:1

DESIGN UNITS: INCH

THIRD ANGLE PROJECTION

DRAWN BY: AELHAG DATE: 2011/04/20

CHECKED BY: JBELL DATE: 2011/04/20

APPROVED BY DATE

TITLE: .125/(3.17) HOUSING, PLUG AND RECEPTACLE, 3 CKT .330/(8.38) CTR

molex MOLEX INCORPORATED

MATERIAL NO.: SEE CHART

DOCUMENT NO.: SD-42179-3*

SHEET NO.: 3 OF 3

SIZE: C

THIS DRAWING CONTAINS INFORMATION THAT IS PROPRIETARY TO MOLEX INCORPORATED AND SHOULD NOT BE USED WITHOUT WRITTEN PERMISSION