LCD ADAPTER P/N	LC SLEEVE MATERIAL	PLASTIC SHUTTER COLOR
106127-0100	ZR	BLUE
106127-0110	PH. BRONZE	BEIGE

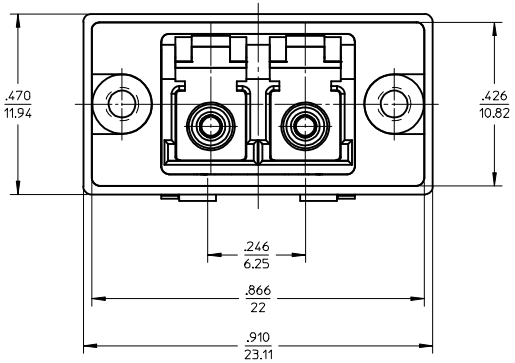

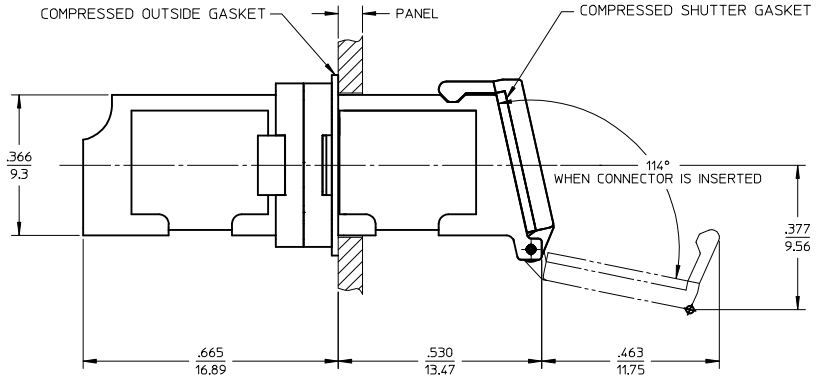

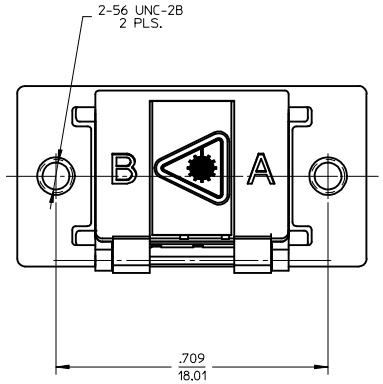

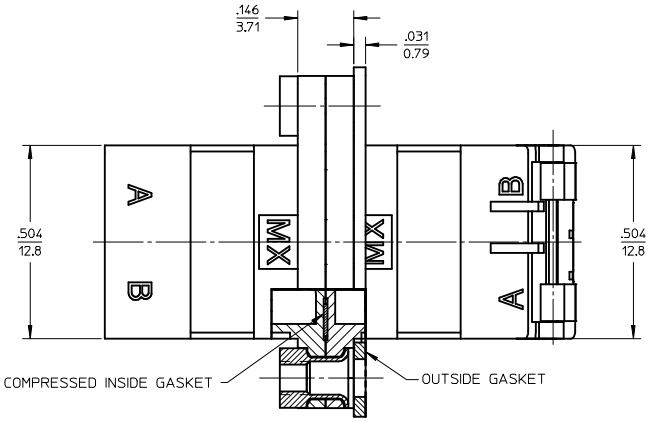

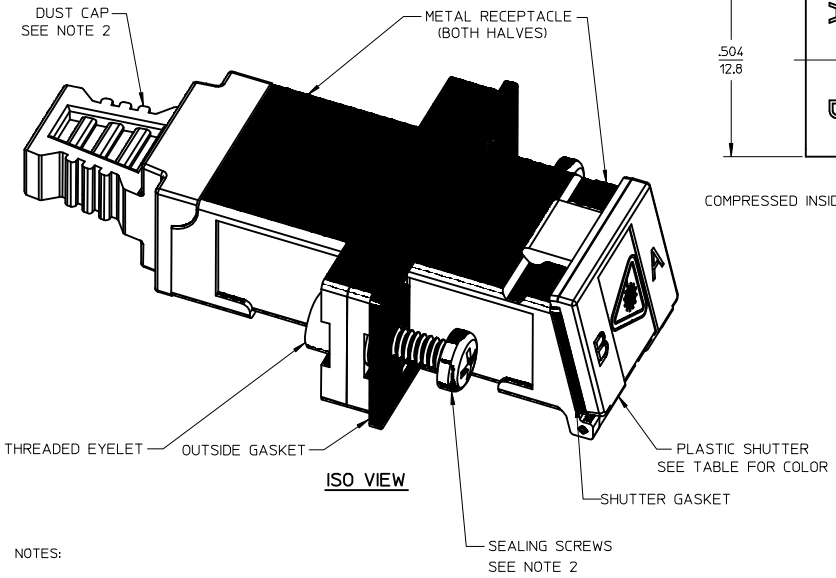

ISO VIEW

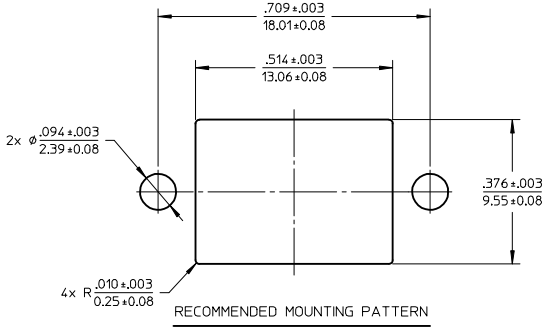

RECOMMENDED MOUNTING PATTERN

NOTES:

1. ALL DIMENSIONS ARE FOR REFERENCE.
2. DUST CAP & SEALING SCREWS SHOWN IN ISO VIEW ONLY.
3. LC DUPLEX ADAPTER HAS SC ADAPTER FOOTPRINT.
4. LC DUPLEX ADAPTER TO BE PACKAGED IN TRAY.
5. SUGGESTED TORQUE OF SS #2-56 SEALING SCREWS TO SS PANEL IS 0.8 IN-LBS.

ENTER DESCRIPTION
EC NO: MF2016-0301 2014/05/23
DRWN:DSZILAGYI 2016/04/13
CH'KD:
APPR:WCHEN
DESCRIPTION
REV
C

QUALITY SYMBOLS
E/V =0
E/F =0
E/P =0

GENERAL TOLERANCES (UNLESS SPECIFIED)

	mm	INCH
4 PLACES	± ---	± ---
3 PLACES	± ---	± ---
2 PLACES	± ---	± ---
1 PLACE	± ---	± ---
0 PLACE	±	±
ANGULAR ±---°		

DRAFT WHERE APPLICABLE MUST REMAIN WITHIN DIMENSIONS

DIMENSION STYLE: IN/MM
SCALE: 4:1
DESIGN UNITS: INCH
THIRD ANGLE PROJECTION

DRAWN BY: YBELENKIY DATE: 2010/09/30
CHECKED BY: DATE:
APPROVED BY: WCHEN DATE: 2010/12/14
MATERIAL NO.: SEE TABLE

TITLE: SEALED LCD ADAPTER

molex

DOCUMENT NO.: SD-106127-01X0
SHEET NO.: 1 OF 1

SIZE: C

THIS DRAWING CONTAINS INFORMATION THAT IS PROPRIETARY TO MOLEX INCORPORATED AND SHOULD NOT BE USED WITHOUT WRITTEN PERMISSION