| LC ADAPTER ASSY. P/N | LC SLEEVE MATERIAL |
|---|---|
| 106127-0590 | PH. BRONZE |
| 106127-1590 | ZR |

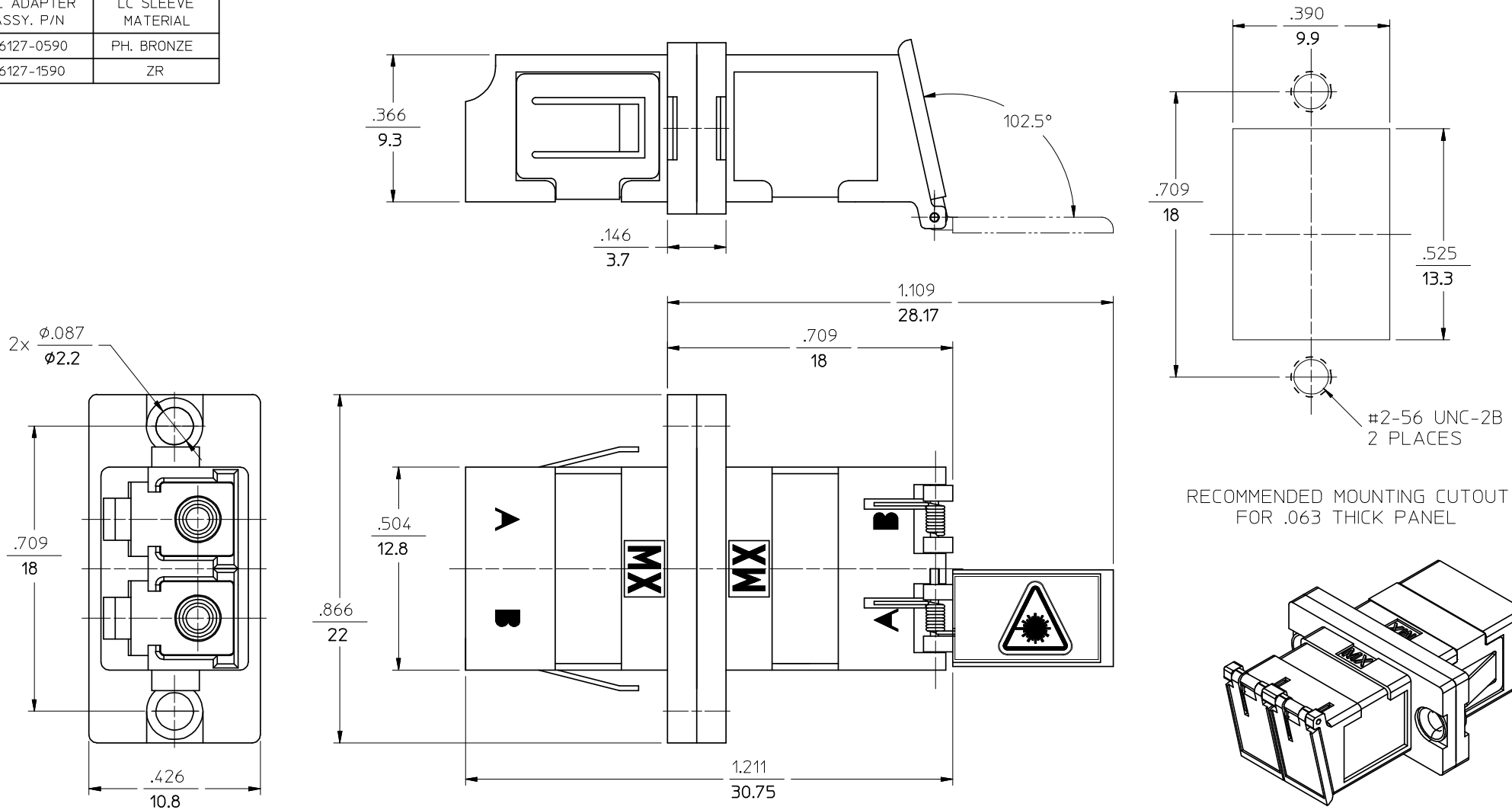


RECOMMENDED MOUNTING CUTOUT
FOR .063 THICK PANEL

NOTES:

1. ALL DIMENSIONS ARE FOR REFERENCE ONLY.
2. DUST CAPS NOT SHOWN.
3. ADAPTER TO BE PACKAGED IN TRAY.

ENTER DESCRIPTION
EC NO: MF2008-0344 2008/02/22
DRWN:KPEVZNER 2008/02/22
CH'KD: 2008/02/27
APPR: IGUMIN
DESCRIPTION
A2
REV

QUALITY SYMBOLS
▼=0
(C)=0

GENERAL TOLERANCES (UNLESS SPECIFIED)

| | mm | INCH |
|---|---|---|
| 4 PLACES | ± --- | ± --- |
| 3 PLACES | ± --- | ± --- |
| 2 PLACES | ± --- | ± --- |
| 1 PLACE | ± --- | ± --- |
| ANGULAR ±1/2° | | |

DRAFT WHERE APPLICABLE MUST REMAIN WITHIN DIMENSIONS

DIMENSION STYLE: IN/MM
SCALE: 4:1
DESIGN UNITS: INCH
THIRD ANGLE PROJECTION

DRAWN BY: PGIBLIN DATE: 2005/10/05
CHECKED BY DATE
APPROVED BY DATE

TITLE: METAL LC DUPLEX ADAPTER

molex MOLEX INCORPORATED

MATERIAL NO.: SEE TABLE
DOCUMENT NO.: SD-106127-X590
SHEET NO.: 1 OF 01
SIZE: B

THIS DRAWING CONTAINS INFORMATION THAT IS PROPRIETARY TO MOLEX INCORPORATED AND SHOULD NOT BE USED WITHOUT WRITTEN PERMISSION