106056

CONNECTOR P/N	ØD(mm)	K (KEY)	TYPE OF FIT
106056-4500	.125	.083 / 2.1	STANDARD
106056-5500	.126		
106055-4500	.125	.079 / 2.0	TIGHT
106055-5500	.126		

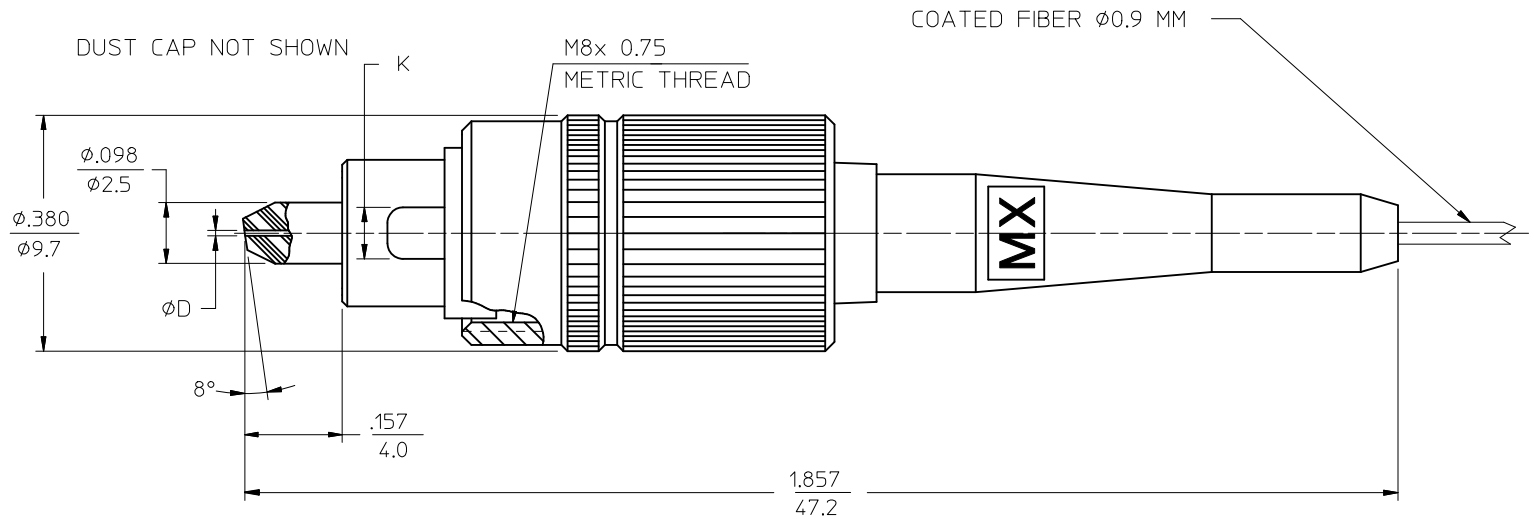

ENTER DESCRIPTION
EC NO: MF2012-0610
DRWN:MAGHAYERE 2012/06/06
CH'KD:
APPR: IGUMIN 2012/06/08
DESCRIPTION
REV
A1

QUALITY SYMBOLS
▼=0
Ⓒ=0

GENERAL TOLERANCES (UNLESS SPECIFIED)

	mm	INCH
4 PLACES	± ---	± ---
3 PLACES	± ---	± ---
2 PLACES	± ---	± ---
1 PLACE	± ---	± ---
0 PLACE	±	±

ANGULAR ±1/2°
DRAFT WHERE APPLICABLE MUST REMAIN WITHIN DIMENSIONS

DIMENSION STYLE: IN/MM
SCALE: 5:1
DESIGN UNITS: INCH
THIRD ANGLE PROJECTION

DRAWN BY: PGIBLIN DATE: 2005/10/24
CHECKED BY DATE
APPROVED BY DATE

TITLE: FCII APC CONN. (BARE FIBER)

molex

MATERIAL NO.: SEE TABLE
DOCUMENT NO.: SD-10605X-X500
SHEET NO.: 1 OF 1
SIZE: B

THIS DRAWING CONTAINS INFORMATION THAT IS PROPRIETARY TO MOLEX INCORPORATED AND SHOULD NOT BE USED WITHOUT WRITTEN PERMISSION

tb_frame_B_P_ME_T
Rev E1 2012/01/25