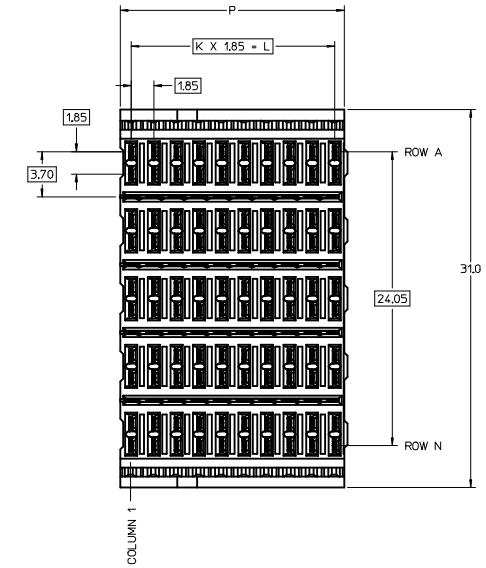

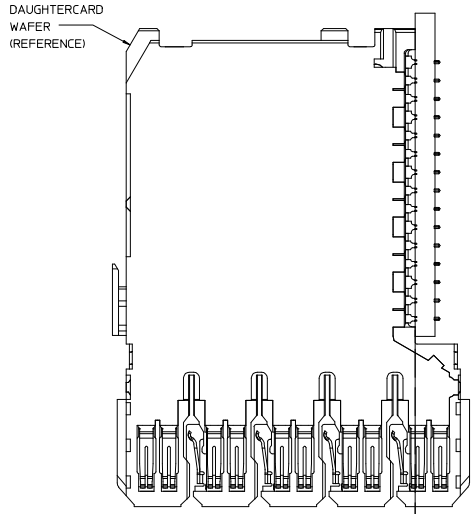

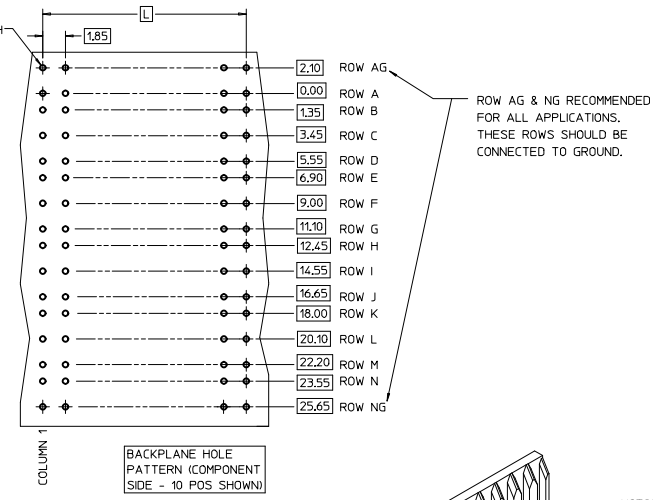

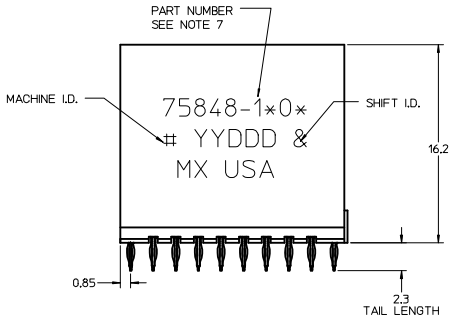

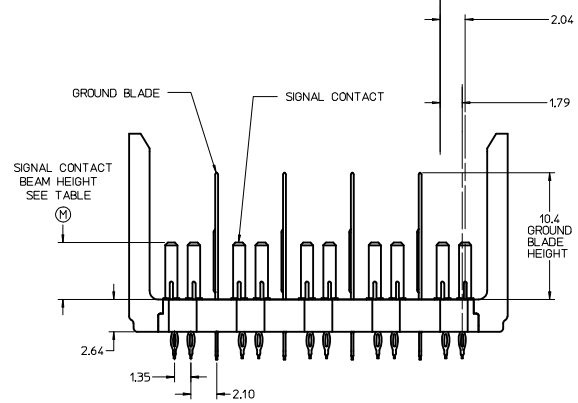

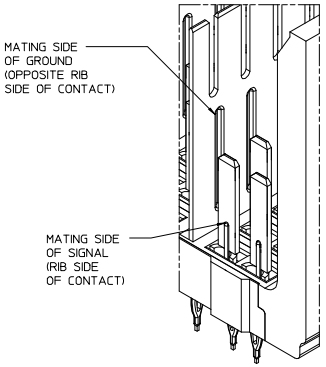

DETAIL Y
SCALE 10:1

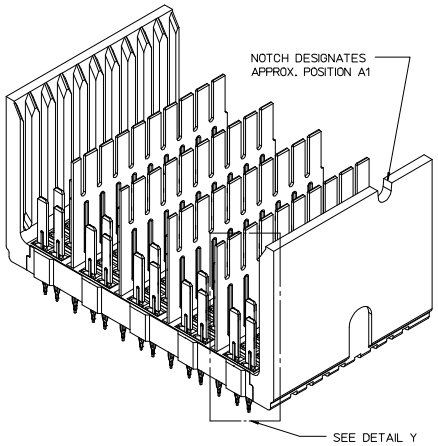

THE PRIMARY CARTON WITH A LABEL STATING "ELV AND RoHS COMPLAINT" IS LEAD FREE. CARTONS WITHOUT THIS LABEL MAY CONTAIN LEAD.

NOTES:

1. MATERIAL: HOUSING - LIQUID CRYSTAL POLYMER (LCP) GLASS-FILLED, UL 94V-0, COLOR - GRAY, ELECTRICALLY ENHANCED INSERT - CONDUCTIVE RESIN, COLOR - BLACK, SIGNAL CONTACT AND GROUND BLADE - HIGH PERFORMANCE COPPER ALLOY.
2. FINISHES: SELECTIVE GOLD (Au) ON CONTACT AREA. SELECTIVE MATTE TIN (Sn) ON PCB TAILS. NICKEL (Ni) OVERALL.
3. THIS PART CONFORMS TO MOLEX PRODUCT SPECIFICATION PS-75221-999.
4. FOR MIXED CONTACT MATING LENGTHS CONSULT MOLEX FOR AVAILABILITY. CONTACT PAIRS MUST BE THE SAME LENGTH.
5. FOR SPECIFIC PART NUMBER AND MATING INFORMATION PLEASE REFER TO CHART.
6. PACKAGE PER PK-70873-565.
7. EITHER MARK PART NUMBER AND DATE CODE APPROXIMATELY WHERE SHOWN, ON EITHER SIDE OF THE PART OR PLACE A LABEL ON THE TUBE.
8. MINIMUM BOARD THICKNESS: 1.6
9. THESE PARTS CONFORM TO MOLEX COSMETIC SPECIFICATION PS-45499-002 CLASS B.
10. MAPS (MOLEX ADVANCED PLATING SYSTEM).

COLUMN
1 = 10 COL
2 = 25 COL

75848-1*0*

MODULE
ORIENTATION
OPEN = 1

KEYING
ORIENTATION
0 = OPEN

PIN LENGTH DIM "M"	GOLD (Au) THICKNESS micrometers
0=3.55 mm	0.25 (MAPS)
1=4.55 mm	
2=5.55 mm	
3=3.55 mm	0.76
4=4.55 mm	
5=5.55 mm	
7=3.55 mm	1.27
8=4.55 mm	
9=5.55 mm	

PART NUMBER TABLE				
ASSY PART NO.	K	L	P	TOTAL NO. OF DIFFERENTIAL PAIRS
75848-110*	9	16.65	18.35	50
75848-120*	24	44.40	46.10	125

LEAD-FREE PLATING

REV TO LEAD-FREE
EC NO: UCP2013-1905
DRWN:GES 2012/09/07
CHK'D:MWOLFE 2012/09/07
APPR:SMILLER 2012/12/05
DESCRIPTION
REV B

QUALITY SYMBOLS =0 =0 =0

GENERAL TOLERANCES (UNLESS SPECIFIED)	mm	INCH
4 PLACES	± ---	± ---
3 PLACES	± ---	± ---
2 PLACES	± 0.25	± ---
1 PLACE	± 0.38	± ---
0 PLACE	± ---	± ---
ANGULAR ±1/2°		

DRAFT WHERE APPLICABLE MUST REMAIN WITHIN DIMENSIONS

DIMENSION STYLE: MM ONLY
SCALE: 5:1
DESIGN UNITS: METRIC
THIRD ANGLE PROJECTION

DRAWN BY: JBINGHAM DATE: 2008/01/28
CHECKED BY: JLAURX DATE: 2008/01/28
APPROVED BY: SMILLER DATE: 2012/12/05

TITLE: GBX 5-PAIR BACKPLANE LF ELECTRICALLY ENHANCED OPEN END SALES ASSEMBLY

molex

MATERIAL NO.: SEE CHART
DOCUMENT NO.: SD-75848-110
SHEET NO.: 1 OF 1
SIZE: D

THIS DRAWING CONTAINS INFORMATION THAT IS PROPRIETARY TO MOLEX INCORPORATED AND SHOULD NOT BE USED WITHOUT WRITTEN PERMISSION