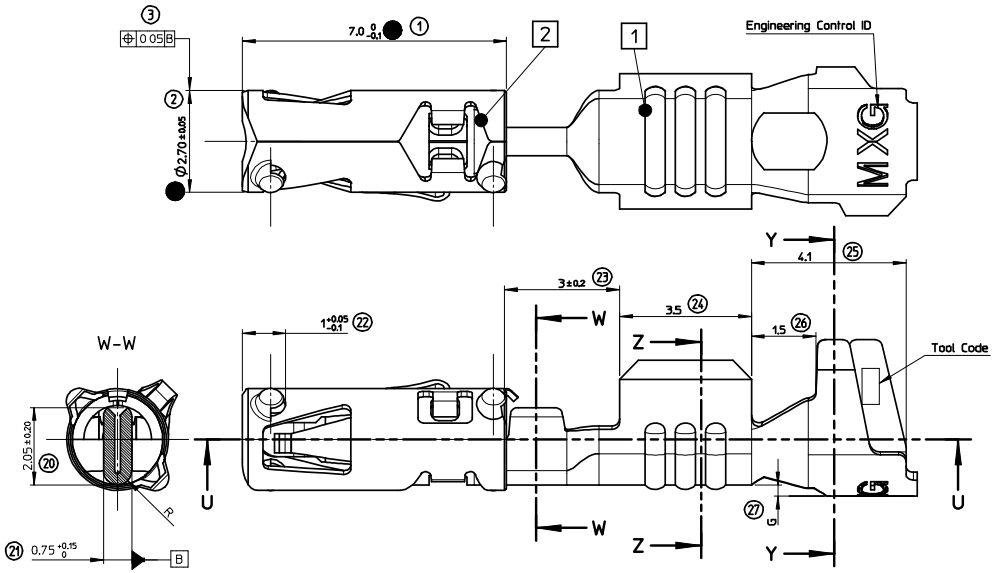

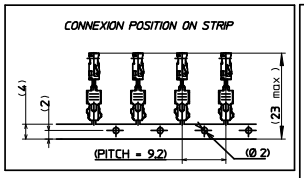

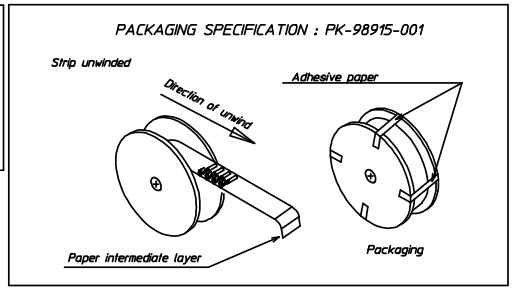

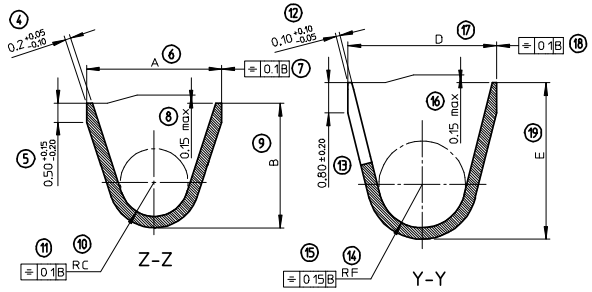

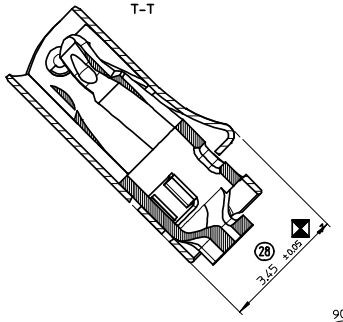

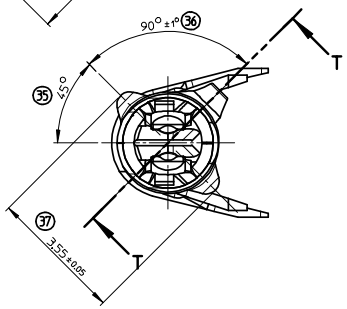

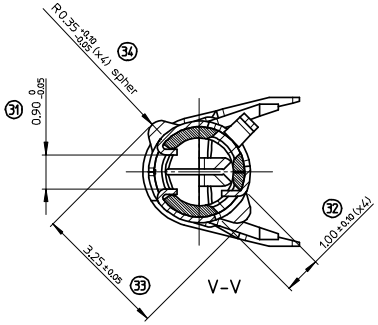

NOTE:

- CRIMPING SPECIFICATION ACCORDING TO CS-64323-001

MARK	DESIGNATION	MATERIAL
2	BOX TERMINAL	STAINLESS STEEL thickness : 0.15 mm
1	BODY TERMINAL	HIGH CONDUCTIVITY COPPER ALLOY thickness : 0.3 mm

MATERIAL NUMBER	CONTACT AREA	CRIMPING AREA	UNDERLAYER	CRIMPING RANGE (mm2)	A±0.3	B±0.3	rC±0.2	D±0.3	E±0.3	rF±0.2	G ±0.1	WEIGHT (g)
	PLATING											
0643231029	Sn	Sn		0.50 TO 1	3.1	2.8	0.575	3.25	3.45	0.95	0.15	0.2420
0643231319	Au 1.27µ MINI	Sn	Ni									0.2442
0643231039	Sn	Sn		>1 TO 2	3.7	3.3	0.9	3.95	4.15	1.15	0.3	0.2580
0643231219	Au 1.27µ MINI	Sn	Ni									0.2602

(SKC) COTES CARACTERISTIQUES SPECIALES
SPECIAL KEY CHARACTERISTICS
- INDICATION DIMENSIONS S.P.C DENOTES S.P.C DIMENSIONS
- INDICATION DIMENSIONS CRITIQUES DENOTES CRITICAL DIMENSIONS
- INDICATION DIMENSIONS FONCTIONNELLES DENOTES FUNCTIONAL DIMENSIONS

QUANTITE PAR FEUILLE INDIVIDUELLE
QUANTITY PER INDIVIDUAL SHEET
1 0 4 (SKC) 0

REV	DESCRIPTION	DATE
C	Revised Dwg EC NO: G2008-0440	2008/05/19
	DRWN: J.JULOU	2008/05/19
	CHKD: F.PAROLARI	2008/05/19
	APPR: L.STICKEIR	2008/05/19

GENERAL TOLERANCES (UNLESS SPECIFIED)

	mm	INCH
4 PLACES	± ---	± ---
3 PLACES	± ---	± ---
2 PLACES	± 0.10	± ---
1 PLACE	± 0.1	± ---
ANGULAR	± 2 °	

DRAFT WHERE APPLICABLE MUST REMAIN WITHIN DIMENSIONS

DIMENSION STYLE: MM ONLY	SCALE: 15:1	DESIGN UNITS: METRIC	FIRST ANGLE PROJECTION
DRAWN BY: VGUERIN	DATE: 2007/11/07	TITLE: CP RCPT TRM 1.5	
CHECKED BY: FPAROLARI	DATE: 2007/11/07		
APPROVED BY: LSTICKEIR	DATE: 2007/11/07	MOLEX INCORPORATED	
MATERIAL NO.: SEE CHART		DOCUMENT NO: SD-64323-001	SHEET NO.: 1 OF 1
SIZE: A1	THIS DRAWING CONTAINS INFORMATION THAT IS PROPRIETARY TO MOLEX INCORPORATED AND SHOULD NOT BE USED WITHOUT WRITTEN PERMISSION		

tb_frame_A1_P_AM_F
Rev. E 2006/04/15