MATERIALS AND FINISHES

BODY BRASS
PLATED NICKEL

CENTER CONTACT BRASS
PLATED GOLD

OUTER CONTACT BRASS
PLATED NICKEL

CRIMP TUBE BRASS
PLATED TIN

COUPLING NUT ZINC
PLATED NICKEL

WASHER BRASS
PLATED NICKEL

SPRING WASHER BeCu
PLATED NICKEL

GASKET SILICONE RUBBER

INSULATOR, SLEEVE TEFLON

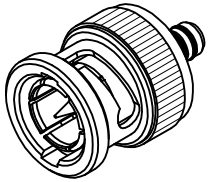

PART # 73171-1290

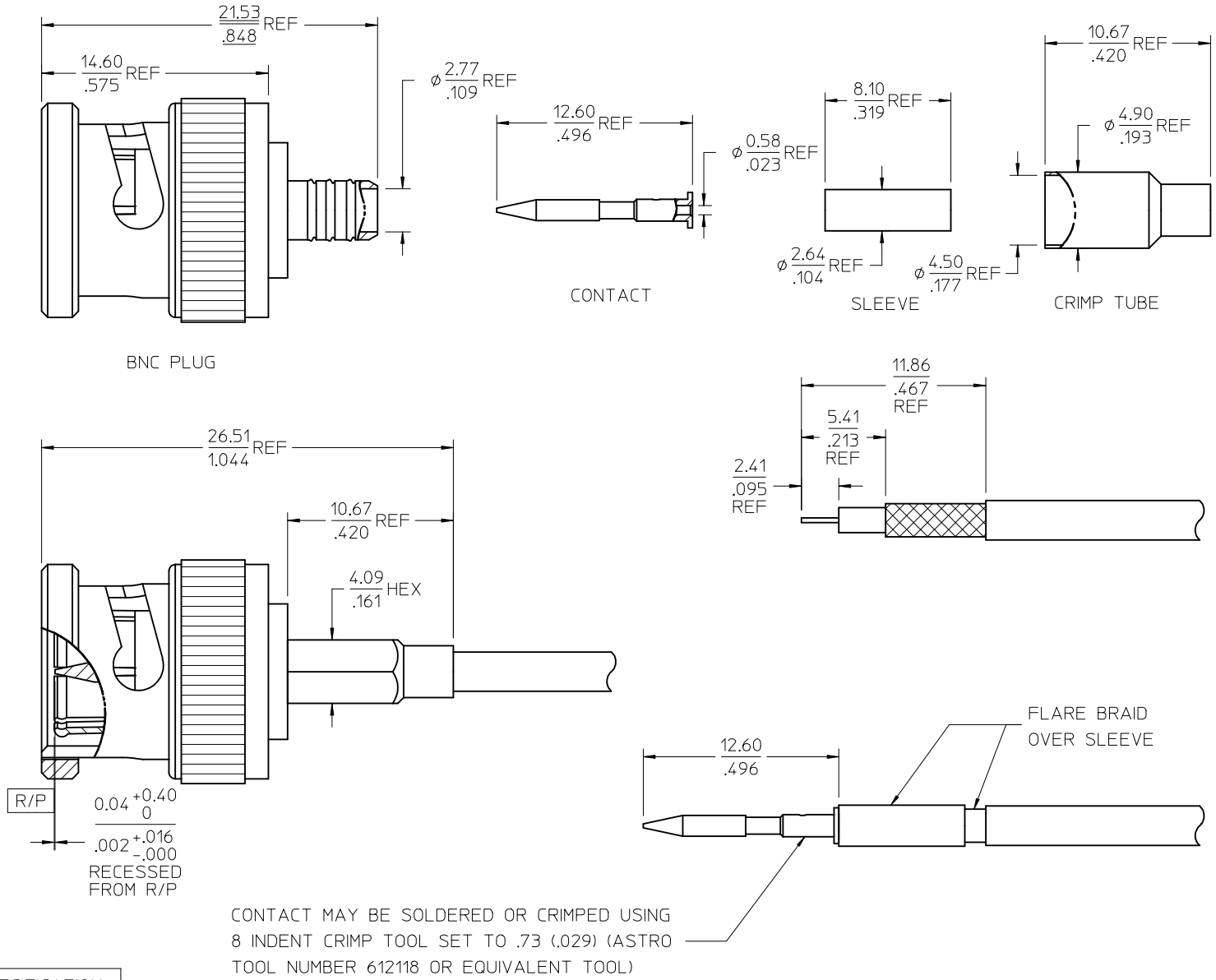

CONTACT MAY BE SOLDERED OR CRIMPED USING 8 INDENT CRIMP TOOL SET TO .73 (.029) (ASTRO TOOL NUMBER 612118 OR EQUIVALENT TOOL)

PS-89675-2020	PRODUCT SPECIFICATION
SPECIFICATION	DESCRIPTION

CHG: ADDED TOLERANCE TO CONTACT ASSY.
EC NO: URF2010-0181 2009/09/24
DRWN:AROBERTSON 2009/09/24
CH'KD:SSS 2009/09/24
APPR: JWIENER
DESCRIPTION
B1
REV

QUALITY SYMBOLS
▼=0
▽=0

GENERAL TOLERANCES (UNLESS SPECIFIED)

	mm	INCH
4 PLACES	± ---	± ---
3 PLACES	± ---	± ---
2 PLACES	± ---	± ---
1 PLACE	± ---	± ---
ANGULAR ± 2 °		

DRAFT WHERE APPLICABLE MUST REMAIN WITHIN DIMENSIONS

DIMENSION STYLE: MM/IN
SCALE
DESIGN UNITS: METRIC
THIRD ANGLE PROJECTION

		DATE
DRAWN BY	LMB	2000/08/22
CHECKED BY	GMH	2000/08/22
APPROVED BY	GMH	2000/08/22

TITLE: BNC PLUG, STR, 75 OHMS RG-179 EWR-1125 BNC-PC

MOLEX INCORPORATED

MATERIAL NO. 731711290
DOCUMENT NO. SD-73171-129
SHEET NO. 1 OF 1
SIZE C

THIS DRAWING CONTAINS INFORMATION THAT IS PROPRIETARY TO MOLEX INCORPORATED AND SHOULD NOT BE USED WITHOUT WRITTEN PERMISSION