38690

NO. OF CIRCUITS	DIM. "A" mm	DIM. "A" in	DIM. "B" mm	DIM. "B" in	ASSEMBLY MATERIAL NO. (STANDARD)	ASSEMBLY MATERIAL NO. (-50 OPT)
02	17.9	.71	8.3	.33	386906602	386907802
03	26.2	1.03	16.5	.65	386906603	386907803
04	34.4	1.36	24.8	.98	386906604	386907804
05	42.7	1.68	33.0	1.30	386906605	386907805
06	50.9	2.01	41.3	1.63	386906606	386907806
07	59.2	2.33	49.5	1.95	386906607	386907807
08	67.4	2.66	57.8	2.28	386906608	386907808
09	75.7	2.98	66.0	2.60	386906609	386907809
10	83.9	3.31	74.3	2.93	386906610	386907810
11	92.2	3.63	82.6	3.25	386906611	386907811
12	100.5	3.96	90.8	3.58	386906612	386907812
13	108.7	4.28	99.1	3.90	386906613	386907813
14	117.0	4.61	107.3	4.23	386906614	386907814
15	125.2	4.93	115.6	4.55	386906615	386907815
16	133.5	5.26	123.8	4.88	386906616	386907816
17	141.7	5.58	132.1	5.20	386906617	386907817
18	150.0	5.91	140.3	5.53	386906618	386907818
19	158.2	6.23	148.6	5.85	386906619	386907819
20	166.5	6.56	156.8	6.18	386906620	386907820
21	174.8	6.88	165.1	6.50	386906621	386907821
22	183.0	7.21	173.4	6.83	386906622	386907822
23	191.3	7.53	181.6	7.15	386906623	386907823
24	199.5	7.86	189.9	7.48	386906624	386907824
25	207.8	8.18	198.1	7.80	386906625	386907825
26	216.0	8.51	206.4	8.13	386906626	386907826
27	224.3	8.83	214.6	8.45	386906627	386907827
28	232.5	9.16	222.9	8.78	386906628	386907828
29	240.8	9.48	231.1	9.10	386906629	386907829
30	249.0	9.81	239.4	9.43	386906630	386907830
31	257.3	10.13	247.7	9.75	386906631	386907831
32	265.6	10.46	255.9	10.08	386906632	386907832

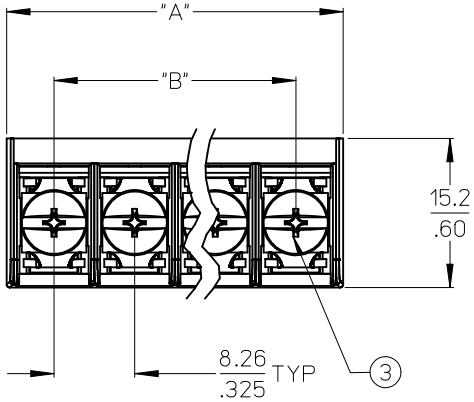

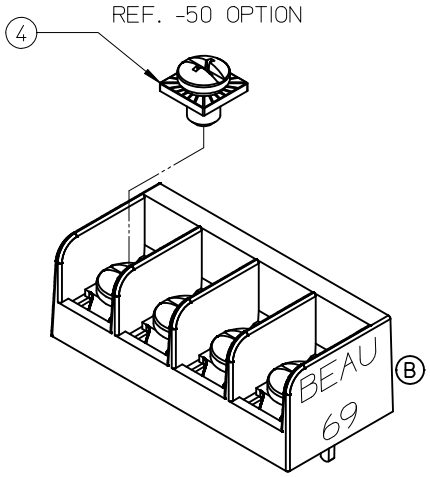

4 CIRCUITS ASSY'
SHOWN AS REFERENCE

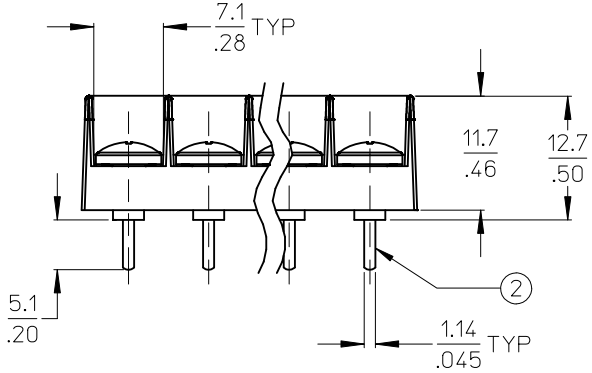

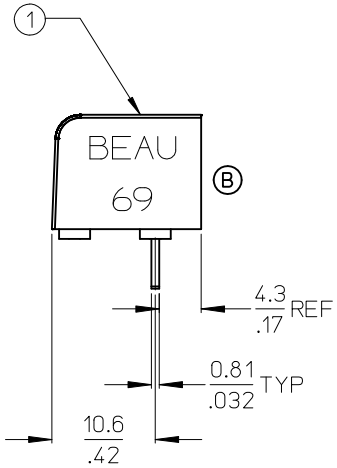

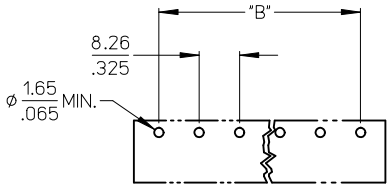

PTH PATTERN
SCALE 1:1

NOTES:
1. MATERIAL: SEE TABLE
2. FINISHES: SEE TABLE.
3. "XX" REFERS TO THE QUANTITY OF CIRCUITS.
4. ROHS COMPLIANT.

ITEM	QTY.	DESCRIPTION	MATERIAL	FINISH
4	XX	SCREW #6-32X.155 PAN PHSLZN/BR/STEEL -50 OPT	STEEL	ZN, CLEAR CHROMATE
3	XX	SCREW #6-32X.160 PAN PHSLNI/BRASS (STANDARD)	BRASS	NICKEL PLATE
2	XX	TERMINAL, PC	BRASS	TIN PLATE
1	1	INSULATOR	POLYESTER (PBT)	BLACK

REMOVE "USA"
EC NO: IPG2012-0967
DRWN:JENCINAS 2012/05/22
CH'KD:JMACNEIL 2012/05/31
APPR:JMACNEIL 2012/06/01
DESCRIPTION
B
REV

QUALITY SYMBOLS
▼=0
Ⓒ=0

GENERAL TOLERANCES (UNLESS SPECIFIED)

	mm	INCH
4 PLACES	± ---	± ---
3 PLACES	± ---	± .005
2 PLACES	± 0.13	± .01
1 PLACE	± 0.3	± ---
ANGULAR ± 2 °		

DRAFT WHERE APPLICABLE MUST REMAIN WITHIN DIMENSIONS

DIMENSION STYLE: MM/IN
SCALE: 2:1
DESIGN UNITS: INCH
THIRD ANGLE PROJECTION

DRAWN BY: AHIDALGO DATE: 2007/04/02
CHECKED BY: JENCINAS DATE: 2007/04/02
APPROVED BY: JMACNEIL DATE: 2012/06/01

TITLE: 8.26/.325 SR TRI-BARRIER TERMINAL STRIP CS, PC ASSY

molex MOLEX INCORPORATED

MATERIAL NO.: SEE CHART
DOCUMENT NO.: SD-38690-001
SHEET NO.: 1 OF 1
SIZE: B

THIS DRAWING CONTAINS INFORMATION THAT IS PROPRIETARY TO MOLEX INCORPORATED AND SHOULD NOT BE USED WITHOUT WRITTEN PERMISSION