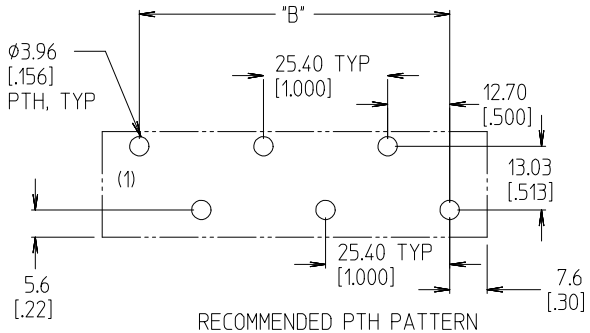

RECOMMENDED PTH PATTERN
VIEW SCALE 1:1

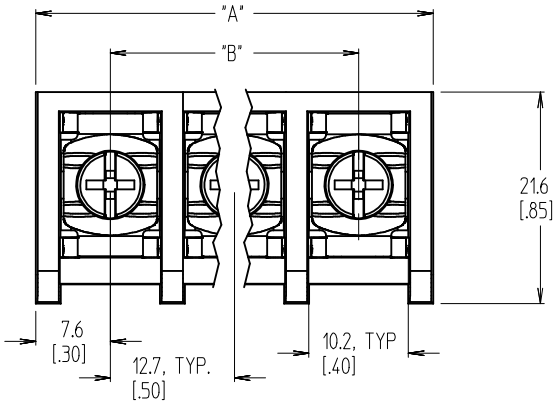

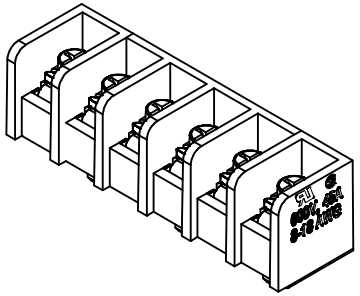

6 CIRCUIT
SHOWN ACTUAL SIZE

MATERIAL NUMBER (STD PART)	NUMBER OF CIRCUITS "XX"	A	B
38660-8802	2	27.9 [1.10]	12.70 [.500]
38660-8803	3	40.6 [1.60]	25.40 [1.000]
38660-8804	4	53.3 [2.10]	38.10 [1.500]
38660-8805	5	66.0 [2.60]	50.80 [2.000]
38660-8806	6	78.7 [3.10]	63.50 [2.500]
38660-8807	7	91.4 [3.60]	76.20 [3.000]
38660-8808	8	104.1 [4.10]	88.90 [3.500]
38660-8809	9	116.8 [4.60]	101.60 [4.000]
38660-8810	10	129.5 [5.10]	114.30 [4.500]
38660-8811	11	142.2 [5.60]	127.00 [5.000]
38660-8812	12	154.9 [6.10]	139.70 [5.500]
38660-8813	13	167.6 [6.60]	152.40 [6.000]
38660-8814	14	180.3 [7.10]	165.10 [6.500]
38660-8815	15	193.0 [7.60]	177.80 [7.000]

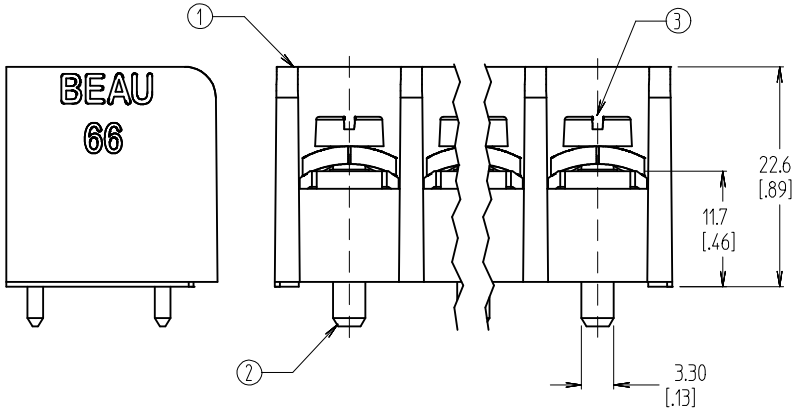

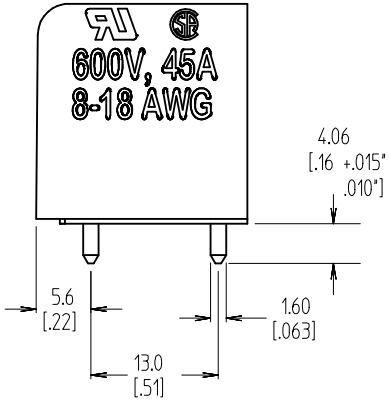

NOTES:

1. MATERIAL: SEE TABLE
2. FINISHES: SEE TABLE
2. "XX" - REFERS TO THE NUMBER OF CIRCUIT POSITIONS.
3. INCH DIMENSIONS ARE SHOWN IN BRACKETS [.XXX].
4. ASSEMBLY IS ROHS COMPLIANT.

ITEM	QTY	DESCRIPTION	MATERIAL	FINISH
3	XX	SCREW	STEEL	ZN/YELLOW CHROMATE
2	XX	TERMINAL	RED BRASS	TIN OVER COPPER
1	1	INSULATOR	POLYESTER (PBT)	BLACK

REV	DESCRIPTION
A	INITIAL RELEASE EC NO: WNA2009-0043 DRWN:CLYORK 2008/09/22 CH'KD:RDEROSS 2008/09/22 APPR:RDEROSS 2008/09/23

QUALITY SYMBOLS
▼=0
Ⓒ=0

GENERAL TOLERANCES (UNLESS SPECIFIED)

	mm	INCH
4 PLACES	± ---	± ---
3 PLACES	± ---	± .005
2 PLACES	± 0.13	± .01
1 PLACE	± 0.3	± ---
ANGULAR ± 2 °		

DRAFT WHERE APPLICABLE MUST REMAIN WITHIN DIMENSIONS

DIMENSION STYLE: MM/IN
SCALE: 1:1
DESIGN UNITS: INCH
THIRD ANGLE PROJECTION

DRAWN BY: C. YORK DATE: 2008/09/08
CHECKED BY: R. DEROSS DATE: 2008/09/08
APPROVED BY: R. DEROSS DATE: 2008/09/08

TITLE: SR BTS, 12.70/.500 PITCH PC, NO MTG ASSY, ROHS COMPLIANT

molex MOLEX INCORPORATED

MATERIAL NO.: SEE CHART
DOCUMENT NO.: SD-38660-003
SHEET NO.: 1 OF 1
SIZE: B

THIS DRAWING CONTAINS INFORMATION THAT IS PROPRIETARY TO MOLEX INCORPORATED AND SHOULD NOT BE USED WITHOUT WRITTEN PERMISSION