QTY OF CIRCUITS "XX"	DIM. "A"	DIM. "B"	ASSEMBLY MATERIAL NO. (STANDARD)	ASSEMBLY MATERIAL NO. (-50 OPTION)
02	21.1 [.83]	9.53 [.375]	387244102	387244902
03	30.7 [1.21]	19.05 [.750]	387244103	387244903
04	40.2 [1.58]	28.58 [1.125]	387244104	387294904
05	49.7 [1.96]	38.10 [1.500]	387244105	387244905
06	59.2 [2.33]	47.63 [1.875]	387244106	387244906
07	68.8 [2.71]	57.15 [2.250]	387244107	387244907
08	78.3 [3.08]	66.68 [2.625]	387244108	387244908
09	87.8 [3.46]	76.20 [3.000]	387244109	387244909
10	97.3 [3.83]	85.73 [3.375]	387244110	387244910
11	106.9 [4.21]	95.25 [3.750]	387244111	387244911
12	116.4 [4.58]	104.78 [4.125]	387244112	387244912
13	125.9 [4.96]	114.30 [4.500]	387244113	387244913
14	135.4 [5.33]	123.83 [4.875]	387244114	387244914
15	145.0 [5.71]	133.35 [5.250]	387244115	387244915
16	154.5 [6.08]	142.88 [5.625]	387244116	387244916

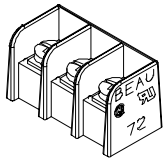

ISOMETRIC VIEW
SCALE 1:1
3 CIRCUIT SHOWN

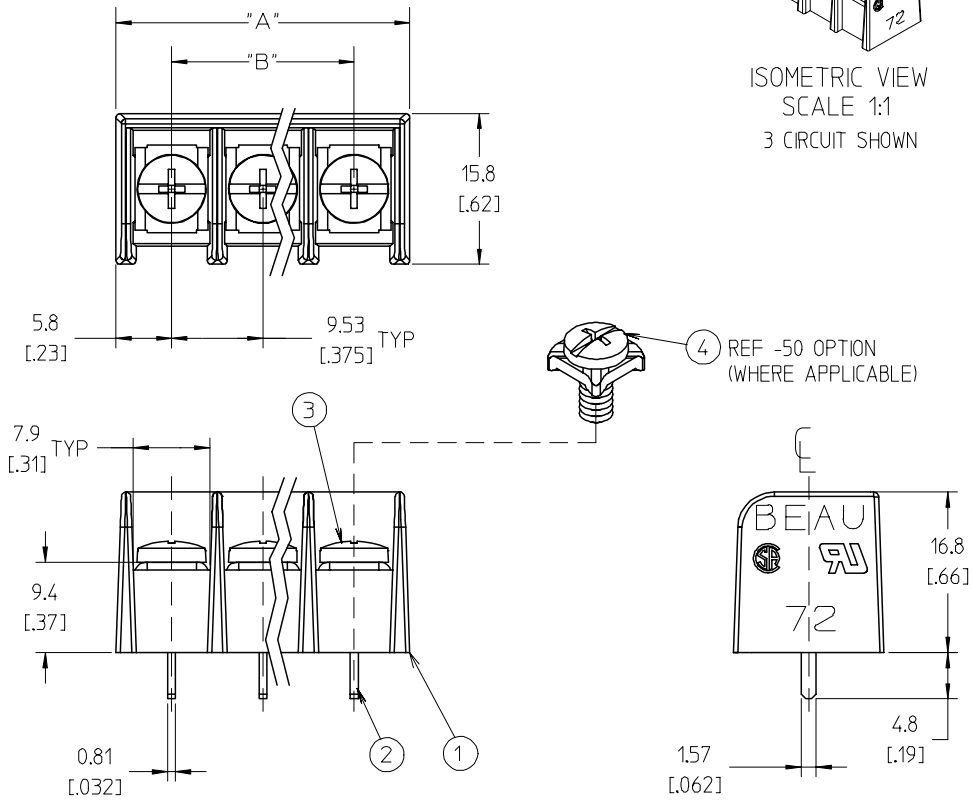

NOTES:

1. MATERIAL: SEE TABLE
2. FINISHES: SEE TABLE
3. PRODUCT SPECIFICATION: NOT REQUIRED
4. PACKAGING: NOT REQUIRED
5. MATES WITH: NONE
6. "XX" REFERS TO THE QUANTITY OF CIRCUITS.
7. ALL COMPONENTS ARE ROHS COMPLIANT.

ITEM	QTY	DESCRIPTION	MATERIAL	FINISH
4	XX	SCREW W/WASHER, #6-32X.250, PANHD, PH-SL	STEEL	ZN, CLEAR CHROMATE
3	XX	SCREW, #6-32X.250, BHD, PHIL-SLOT	STEEL	ZN, CLEAR CHROMATE
2	XX	TERMINAL, PC	BRASS	TIN PLATE
1	1	INSULATOR, SR, CS, MOLDED, -C	PBT	BLACK

INITIAL RELEASE
EC NO: ETC2006-0335 2006/03/27
DRWN:CYORK 2006/03/31
CH'KD:RDEROSS 2006/03/31
APPR:RDEROSS 2006/03/31
DESCRIPTION
REV A

QUALITY SYMBOLS
▼=0
▽=0

GENERAL TOLERANCES (UNLESS SPECIFIED)

	mm	INCH
4 PLACES	± ---	±.0015
3 PLACES	± 0.038	±.005
2 PLACES	± 0.13	±.01
1 PLACE	± 0.3	± ---
ANGULAR ± 2 °		

DRAFT WHERE APPLICABLE MUST REMAIN WITHIN DIMENSIONS

DIMENSION STYLE: MM/IN
SCALE: 2:1
DESIGN UNITS: INCH
THIRD ANGLE PROJECTION

DRAWN BY: C. YORK DATE: 2006/03/24
CHECKED BY: RDEROSS DATE: 2006/03/24
APPROVED BY: RDEROSS DATE: 2006/03/24

TITLE: SR BTS, PC, CS ASSY
9.53 MM [.375] CENTERS

molex MOLEX INCORPORATED

MATERIAL NO.: SEE CHART
DOCUMENT NO.: SD-38724-002
SHEET NO.: 1 OF 1
SIZE: B

THIS DRAWING CONTAINS INFORMATION THAT IS PROPRIETARY TO MOLEX INCORPORATED AND SHOULD NOT BE USED WITHOUT WRITTEN PERMISSION