19204

| ASSEMBLY NUMBER | |
|---|---|
| MATERIAL NUMBER | ENGINEERING NUMBER |
| 192040001 | A-1XC |
| 192040003 | A-2XCX |
| 192040006 | A-3XC |
| 192040008 | A-5XC |
| 192040011 | B-1XC |
| 192040013 | B-2XCX |
| 192040015 | B-3XC |
| 192040017 | B-5XC |
| 192040021 | B-8XC |
| 192040023 | C-1XC |
| 192040025 | C-2XCX |
| 192040027 | C-3XC |
| 192040029 | C-5XC |
| 192040019 | C-8XC |
| 191640284 | SA-2XCX |
| 191640041 | SB-2XCX |
| 191640285 | SC-2XCX |

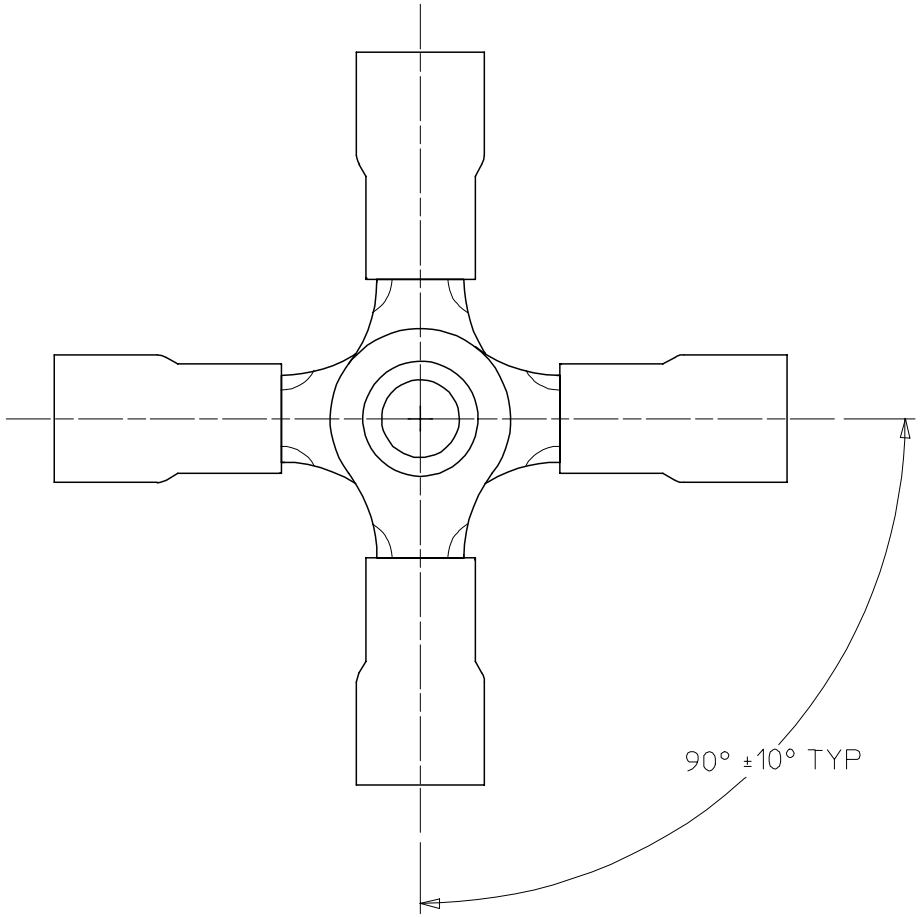


SALES DRAWING

WAS 6525-01/C,-02/C
EC NO: ETC2003-0305
DRWN:DMYRICK 2003/05/16
CH'KD:RWD 2003/05/16
APPR:RDEROSS 2003/05/16
DESCRIPTION
C
REV

QUALITY SYMBOLS
▼ = 0
▽ = 0

| GENERAL TOLERANCES (UNLESS SPECIFIED) | mm | INCH |
|---|---|---|
| 4 PLACES | ± --- | ± --- |
| 3 PLACES | ± --- | ± .005 |
| 2 PLACES | ± 0.13 | ± .01 |
| 1 PLACE | ± 0.25 | ± --- |
| ANGULAR ±1/2° | | |

DRAFT WHERE APPLICABLE
MUST REMAIN WITHIN DIMENSIONS

| SCALE | DESIGN UNITS | |
|---|---|---|
| NTS | INCH | THIRD ANGLE PROJECTION |

REVISE ON CAD ONLY

DIMENSION STYLE: IN/MM

| | | |
|---|---|---|
| DRAWN BY | RWD | DATE 03/05/14 |
| CHECKED BY | RWD | DATE 03/05/14 |
| APPROVED BY | RWD | DATE 03/05/14 |

TITLE: 4-WAY CONNECTOR ASSEMBLY

molex MOLEX INCORPORATED

| MATERIAL NO. | DOCUMENT NO. | SHEET NO. |
|---|---|---|
| (SEE CHART) | SD-19204-002 | 1 OF 1 |

THIS DRAWING CONTAINS INFORMATION THAT IS PROPRIETARY TO MOLEX INCORPORATED AND SHOULD NOT BE USED WITHOUT WRITTEN PERMISSION

A

tb_frame_A
rev. B1 2000/08/01