106004

KIT P/N	VERSION	SLEEVE MATERIAL	BEZEL FRAME/DOOR COLOR	ADAPTER COLOR	DOOR TYPE
106004-3580	1 (ST-SC)	PHOSPHOR BRONZE	METAL/METAL	METAL	MX LOGO
106004-3581		ZIRCONIA			
106004-3587			METAL/BLACK		
106004-3582	2 (FC-SC)	PHOSPHOR BRONZE	METAL/METAL		
106004-3583		ZIRCONIA			
106004-3596			METAL/BLACK		
106004-3584	3 (SC-SC)	PHOSPHOR BRONZE	METAL/METAL		
106004-3585		ZIRCONIA			
106004-3586			METAL/BLACK		
106004-3588	4 (MTP-MTP)	N/A	BLACK/BLACK	BLACK	
106004-3589					
106004-3597			METAL/BLACK	METAL	
106004-3590	1 (ST-SC)	PHOSPHOR BRONZE	METAL/METAL	METAL	NO LOGO
106004-3591		ZIRCONIA			
106004-3592	2 (FC-SC)	PHOSPHOR BRONZE			
106004-3593		ZIRCONIA			
106004-3594	3 (SC-SC)	PHOSPHOR BRONZE			
106004-3595		ZIRCONIA			
106004-3598	4 (MTP-MTP)	N/A	BLACK/BLACK	BLACK	
106004-3599					

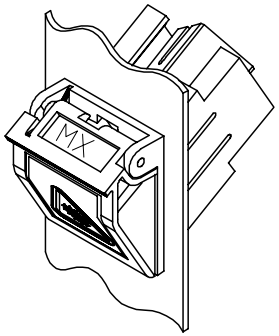

ISOMETRIC VIEW

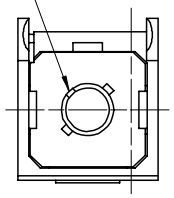

VIEW A
VERSION 1 & 2 (KEY LOCATION)
DOOR REMOVED
ROTATED 30° CW

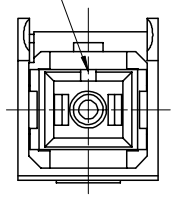

VIEW A
VERSION 3 (SC-SC)
DOOR REMOVED
ROTATED 30° CW

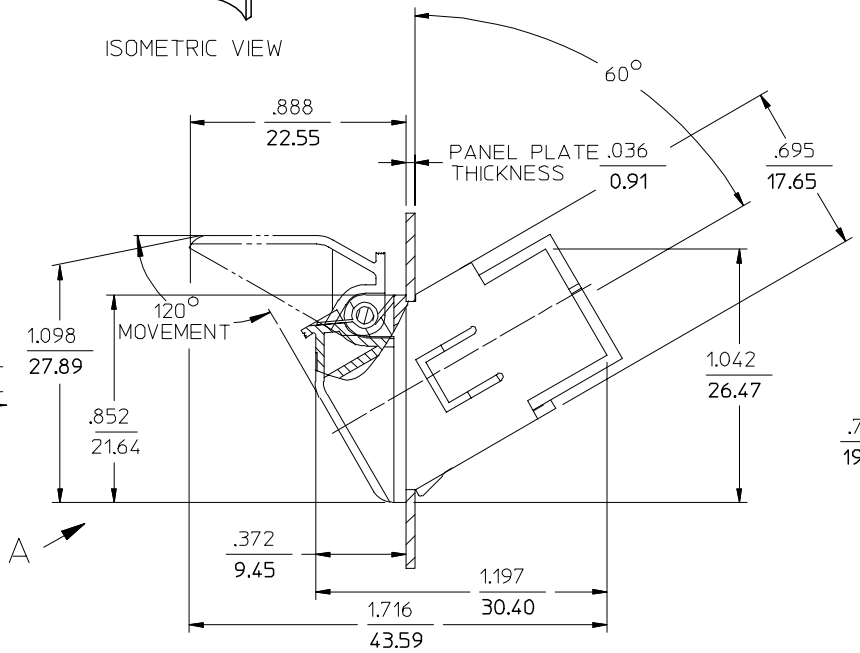

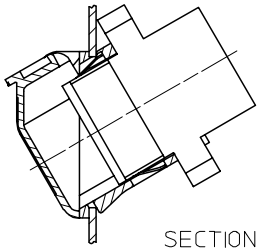

SECTION B-B
VERSION 4 (MTP-MTP)
SEE NOTE 3

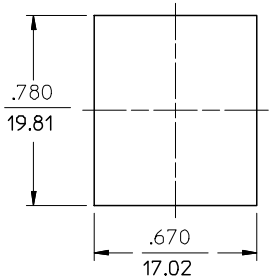

RECOMMENDED MOUNTING HOLE

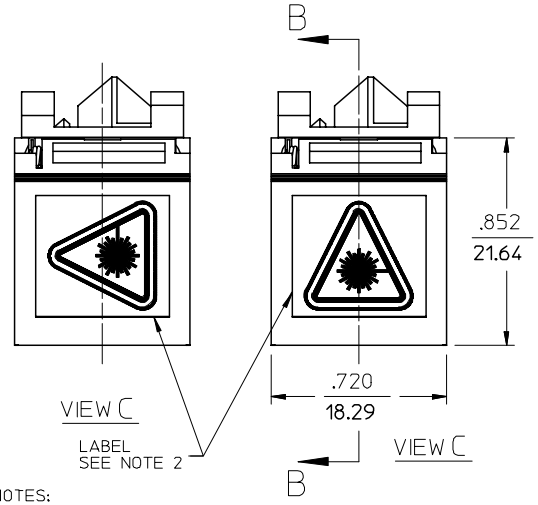

NOTES:

1. LABEL TO BE INSTALLED BY CUSTOMER.
2. MTP-MTP ADAPTER (VERSION 4) TO BE ASSEMBLED BY CUSTOMER, AFTER BEZEL IS INSTALLED IN PANEL CUTOUT.

ENTER DESCRIPTION
EC NO: MF2006-0824 2006/06/13
DRWN: KPEVZNER 2006/06/13
CH'KD: 2006/06/15
APPR: GUMIN
DESCRIPTION
A1
REV

QUALITY SYMBOLS
▼=0
▽=0

GENERAL TOLERANCES (UNLESS SPECIFIED)

	mm	INCH
4 PLACES	± ---	± ---
3 PLACES	± ---	± ---
2 PLACES	± ---	± ---
1 PLACE	± ---	± ---
ANGULAR ±1/2°		

DRAFT WHERE APPLICABLE MUST REMAIN WITHIN DIMENSIONS

DIMENSION STYLE: IN/MM
SCALE: 2:1
DESIGN UNITS: INCH
THIRD ANGLE PROJECTION

DRAWN BY: RPACIFICI DATE: 2005/10/20
CHECKED BY DATE
APPROVED BY DATE

TITLE: METALIZED SIMPLEX BEZEL KITS WITH PUSH TAB

molex MOLEX INCORPORATED

MATERIAL NO.: SEE TABLE
DOCUMENT NO.: SD-106004-35XX
SHEET NO.: 1 OF 1
SIZE: B

THIS DRAWING CONTAINS INFORMATION THAT IS PROPRIETARY TO MOLEX INCORPORATED AND SHOULD NOT BE USED WITHOUT WRITTEN PERMISSION

tb_frame_B_P_ME_T
Rev. D 2004/04/02