FILE NO.	A-CD-201-01

NOTES:

① MAT'L: COPPER

PLATING: ELECTRO-TIN (.0003 MIN.)

② INSULATION: MOLDED PVC (RED)

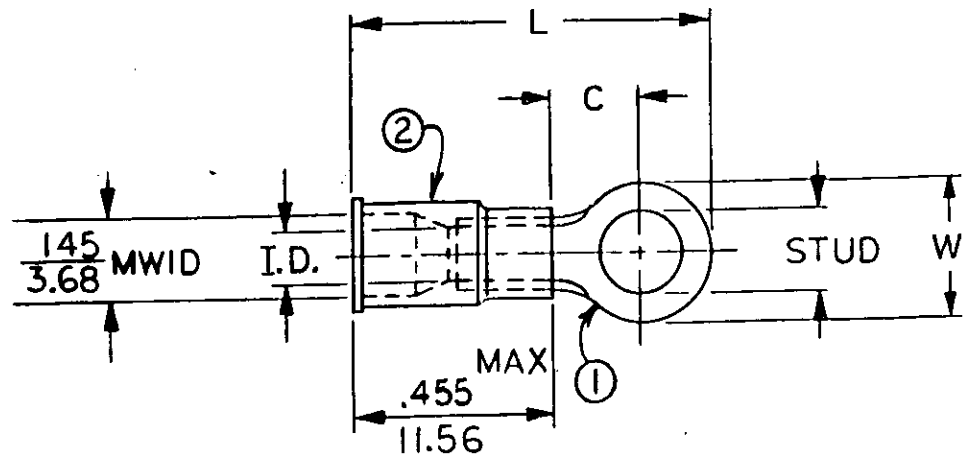

STUD SIZES: (±.005)

02 = .094
04 = .119
06 = .146
08 = .173
10 = .198
14 = .265
56 = .328
38 = .390

"UL" LISTING #E32244
"CSA" LISTING #18689

MWID = MAXIMUM WIRE INSULATION DIAMETER

WIRE SIZE: 22-18 AWG
.25-1.5 MM²

ALL DIMENSIONS = INCHES / MM

PART NUMBER	"W" ±.010	"C" MIN.	"L" MAX.	"ID" MIN.			AVAILABLE STUD SIZES	STOCK THICKNESS	
A-220-	.225 / 5.71	.157 / 3.99	.759 / 19.28	.062 / 1.57			02X, 04X, 06X	.028 +.001 -.000 / .71	
A-221-	.312 / 7.92	.270 / 6.86	.946 / 23.26	.062 / 1.57			06X, 08X, 10X	.028 +.001 -.000 / .71	
A-222-	.467 / 11.86	.386 / 9.80	1.110 / 28.19	.062 / 1.57			10X, 14X, 56X	.028 +.001 -.000 / .71	
A-226-	.534 / 13.56	.552 / 14.02	1.309 / 33.25	.054 / 1.37			10X, 14X, 56X, 38X	.031 ±.001 / .79	
A-232-	.254 / 6.45	.240 / 6.10	.857 / 21.77	.062 / 1.57			04X, 06X, 08X	.028 +.001 -.000 / .71	

DIMENSIONAL TOLERANCES UNLESS OTHERWISE SPECIFIED			REFERENCE	SCALE: NTS	DATE	TITLE: RING TONGUE TERMINAL INSULKRIMP 200-SERIES	ETC molex INCORPORATED
FRAC.	DEC.	ANG.		DRWN. BY: K-	10-23-84		
±	±	±		CHKD. BY: GZ	11-9-84		DWG. NO. A CUSTOMER DWG.
				APPRD. BY:			