DWG. NO. SD-56265-001

注記
NOTES

1. 使用材料 ： リン青銅, 錫メッキ（t=0.254）
   MATERIAL : PRE-TINNED PHOSPHOR BRONZE (t=0.254)
2. 適合ハウジング ： 51346シリーズ
   APPLICABLE HOUSING : 51346 SERIES

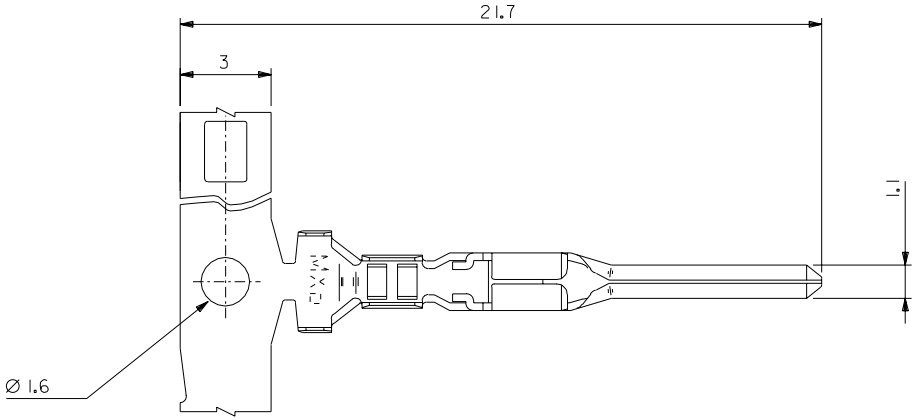

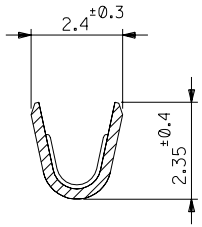

SECT. X-X

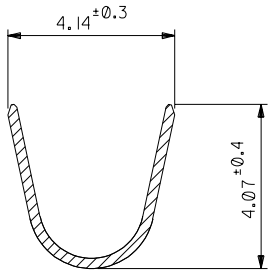

SECT. Y-Y

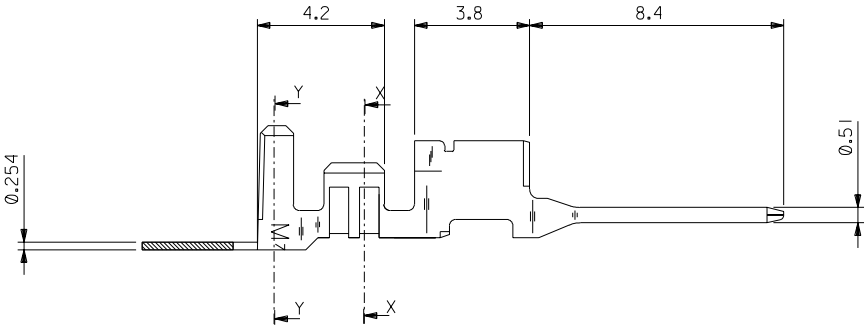

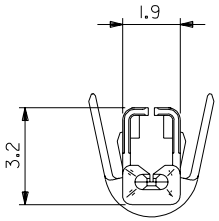

56265-8100	バラ状 LOOSE
56265-8000	連鎖状 CHAIN
MATERIAL NO.	端子形状 FORM

DO NOT SCALE DRAWING

EC NO.		REVISED EC NO. J20003-2363 DRWN: H.II '03/03/14 CH'K: K.ASASAKAWA APPR: T.YAMAGUCHI	REVISED EC NO. J20003-1314 DRWN: H.II '02/11/08 CH'K: K.ASASAKAWA APPR: T.YAMAGUCHI	RELEASED EC NO. J20003-1178 DRWN: H.II '02/10/29 CH'K: K.ASASAKAWA APPR: T.YAMAGUCHI
DRWN:				
CH'K:				
APPR:				
REV		B	A	0

DESCRIPTION

MATERIAL 材料: 注記参照 SEE NOTES

FINISH 仕上げ: //

WIRE RANGE 適用電線範囲: AWG #18 - #20

INS. RANGE 被覆外径: Ø2.6MAX.

GENERAL TOLERANCES: (UNLESS SPECIFIED) 一般公差

10 UNDER 未満	±0.2
10 OVER 以上 30 UNDER 未満	±0.25
30 OVER 以上	±0.3
ANGLE 角度	±3°

56265-8*00

SCALE: //

DESIGN UNITS: ☒mm ☐INCH

DRAWN BY & DATE: H.II '02/10/29

CHECKED BY & DATE: K.ASASAKAWA '02/10/29

APPROVED BY & DATE: T.YAMAGUCHI '02/10/29

CAD FILENAME: SD5626500 1.S01

MODEL NO.: THIRD ANGLE PROJECTION

DIMENSIONS: ☐ mm/INCH ☐ INCH/mm ☒ mm ONLY

SHT | REV

REVISE ON CAD ONLY

TITLE: 3.3 mm WIRE TO WIRE CONN. PLUG TERMINAL

molex MOLEX INCORPORATED

MATERIAL NO.: SEE CHART

DRAWING NO.: SD-56265-001

SHEET NO.: 1 OF 1

SIZE: B

THIS DRAWING CONTAINS INFORMATION THAT IS PROPRIETARY TO MOLEX INCORPORATED AND SHOULD NOT BE USED WITHOUT WRITTEN PERMISSION.

SD5626500 1.S01

EN-02J(097) MXJ-54