International
IOR Rectifier

PD - 97359

IRFH5053PbF

Applications

- 3 Phase Boost Converter Applications
- Secondary Side Synchronous Rectification

HEXFET® Power MOSFET

V_{DSS}	$R_{DS(on)}$ max	Qg
100V	18mΩ@V_{GS} = 10V	24nC

Benefits

- Very low $R_{DS(ON)}$ at 10V V_{GS}
- Low Gate Charge
- Fully Characterized Avalanche Voltage and Current
- 100% Tested for R_G
- Lead-Free (Qualified up to 260°C Reflow)
- RoHS compliant (Halogen Free)
- Low Thermal Resistance
- Large Source Lead for more reliable Soldering

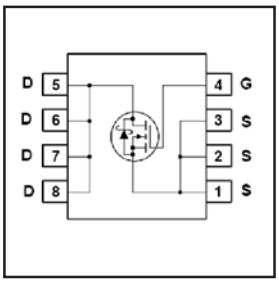

Absolute Maximum Ratings

	Parameter	Max.	Units
V_{DS}	Drain-to-Source Voltage	100	V
V_{GS}	Gate-to-Source Voltage	± 20	
I_D @ T_A = 25°C	Continuous Drain Current, V_{GS} @ 10V	9.3	A
I_D @ T_A = 70°C	Continuous Drain Current, V_{GS} @ 10V	7.4	
I_D @ T_C = 25°C	Continuous Drain Current, V_{GS} @ 10V	46	
I_{DM}	Pulsed Drain Current ①	75	
P_D @T_A = 25°C	Power Dissipation ⑤	3.1	W
P_D @T_A = 70°C	Power Dissipation ⑤	2.0	
	Linear Derating Factor ⑤	0.025	W/°C
T_J T_{STG}	Operating Junction and Storage Temperature Range	-55 to + 150	°C

Thermal Resistance

	Parameter	Typ.	Max.	Units
$R_{\theta JC}$	Junction-to-Case ④	——	1.6	°C/W
$R_{\theta JA}$	Junction-to-Ambient ⑤	——	40	

Notes ① through ⑤ are on page 9

Static @ T_J = 25°C (unless otherwise specified)

	Parameter	Min.	Typ.	Max.	Units	Conditions
BV_{DSS}	Drain-to-Source Breakdown Voltage	100	—	—	V	V_{GS} = 0V, I_D = 250μA
$\Delta BV_{DSS}/\Delta T_J$	Breakdown Voltage Temp. Coefficient	—	0.11	—	V/°C	Reference to 25°C, I_D = 1mA
$R_{DS(on)}$	Static Drain-to-Source On-Resistance	—	14.4	18	mΩ	V_{GS} = 10V, I_D = 9.3A ③
$V_{GS(th)}$	Gate Threshold Voltage	3.0	3.7	4.9	V	V_{DS} = V_{GS}, I_D = 100μA
$\Delta V_{GS(th)}$	Gate Threshold Voltage Coefficient	—	-11	—	mV/°C	
I_{DSS}	Drain-to-Source Leakage Current	—	—	20	μA	V_{DS} = 80V, V_{GS} = 0V
		—	—	250		V_{DS} = 80V, V_{GS} = 0V, T_J = 125°C
I_{GSS}	Gate-to-Source Forward Leakage	—	—	100	nA	V_{GS} = 20V
	Gate-to-Source Reverse Leakage	—	—	-100		V_{GS} = -20V
gfs	Forward Transconductance	19	—	—	S	V_{DS} = 50V, I_D = 7.4A
Q_g	Total Gate Charge	—	24	36	nC	V_{DS} = 50V V_{GS} = 10V I_D = 7.4A See Fig.17 & 18
Q_{gs1}	Pre-Vth Gate-to-Source Charge	—	5.2	—		
Q_{gs2}	Post-Vth Gate-to-Source Charge	—	1.5	—		
Q_{gd}	Gate-to-Drain Charge	—	8.6	—		
Q_{godr}	Gate Charge Overdrive	—	8.7	—		
Q_{sw}	Switch Charge (Q_{gs2} + Q_{gd})	—	10.1	—		
Q_{oss}	Output Charge	—	12	—	nC	V_{DS} = 16V, V_{GS} = 0V
R_G	Gate Resistance	—	0.8	—	Ω	
$t_{d(on)}$	Turn-On Delay Time	—	12	—	ns	V_{DD} = 50V, V_{GS} = 10V I_D = 7.4A R_G=1.8Ω See Fig.15
t_r	Rise Time	—	7.5	—		
$t_{d(off)}$	Turn-Off Delay Time	—	18	—		
t_f	Fall Time	—	4.1	—		
C_{iss}	Input Capacitance	—	1510	—	pF	V_{GS} = 0V V_{DS} = 50V ƒ = 1.0MHz
C_{oss}	Output Capacitance	—	230	—		
C_{rss}	Reverse Transfer Capacitance	—	59	—		

Avalanche Characteristics

	Parameter	Typ.	Max.	Units
E_{AS}	Single Pulse Avalanche Energy ②	—	21	mJ
I_{AR}	Avalanche Current ①	—	7.4	A

Diode Characteristics

	Parameter	Min.	Typ.	Max.	Units	Conditions
I_S	Continuous Source Current (Body Diode)	—	—	2.8	A	MOSFET symbol showing the integral reverse p-n junction diode. 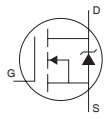
I_{SM}	Pulsed Source Current (Body Diode) ①	—	—	75		
V_{SD}	Diode Forward Voltage	—	—	1.3	V	T_J = 25°C, I_S = 7.4A, V_{GS} = 0V ③
t_{rr}	Reverse Recovery Time	—	31	47	ns	T_J = 25°C, I_F = 7.4A, V_{DD} = 50V di/dt = 800A/μs ③ See Fig.16
Q_{rr}	Reverse Recovery Charge	—	210	320	nC	
t_{on}	Forward Turn-On Time	Intrinsic turn-on time is negligible (turn-on is dominated by LS+LD)				

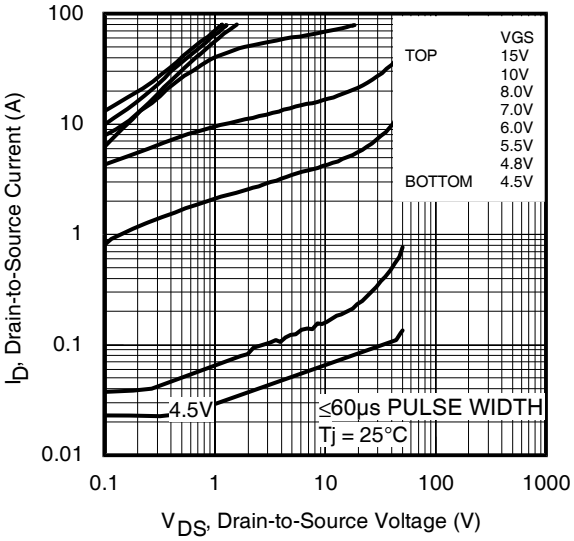

Fig 1. Typical Output Characteristics

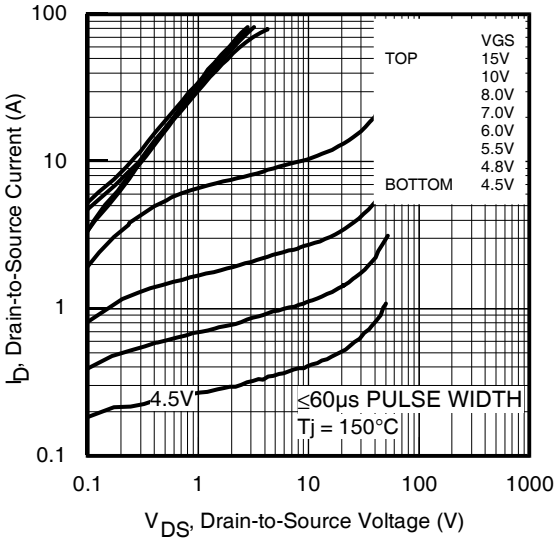

Fig 2. Typical Output Characteristics

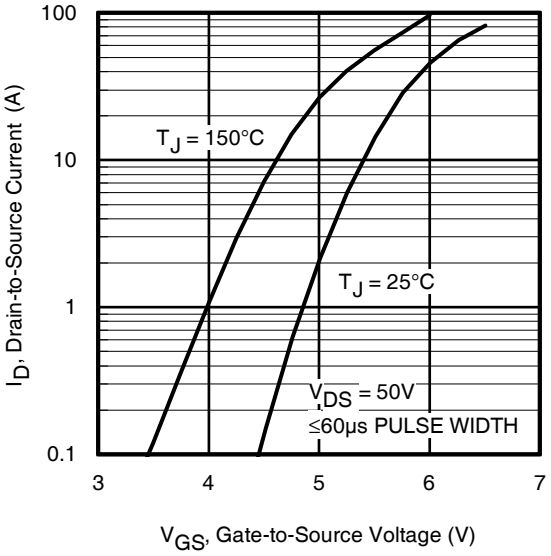

Fig 3. Typical Transfer Characteristics

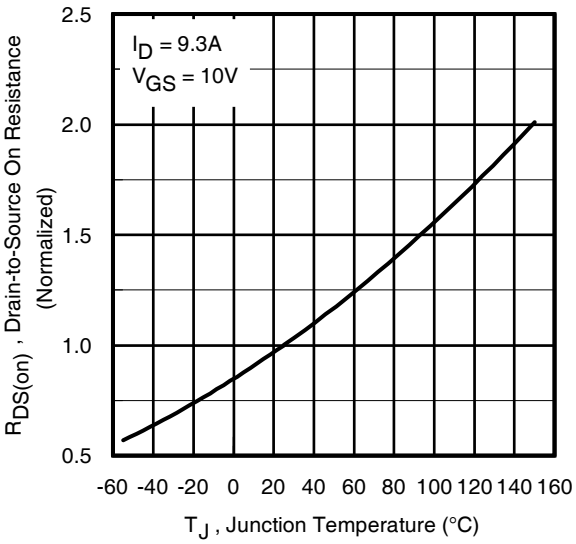

Fig 4. Normalized On-Resistance vs. Temperature

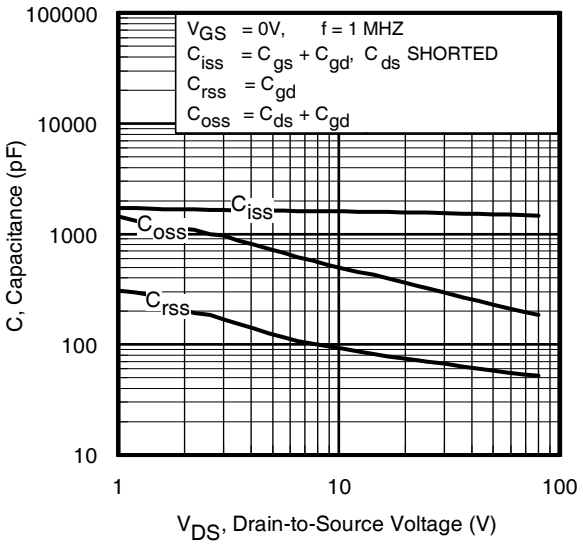

Fig 5. Typical Capacitance vs. Drain-to-Source Voltage

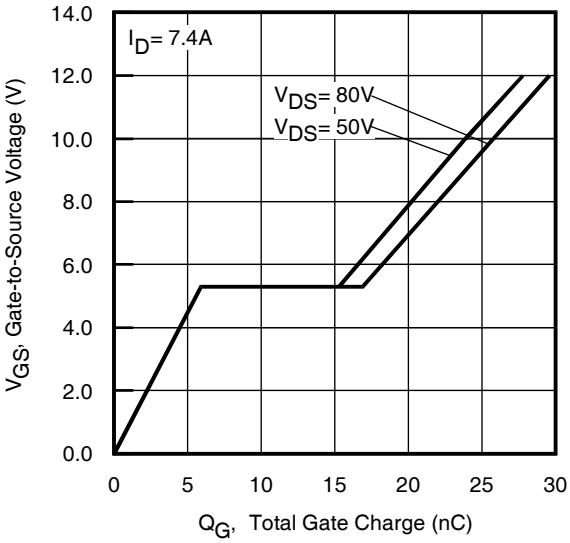

Fig 6. Typical Gate Charge vs. Gate-to-Source Voltage

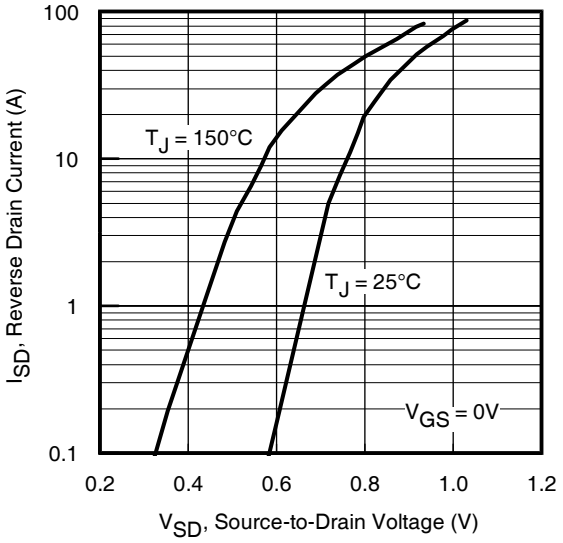

Fig 7. Typical Source-Drain Diode Forward Voltage

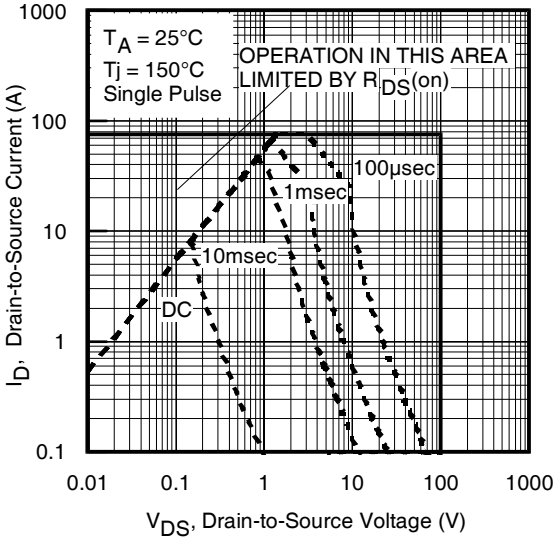

Fig 8. Maximum Safe Operating Area

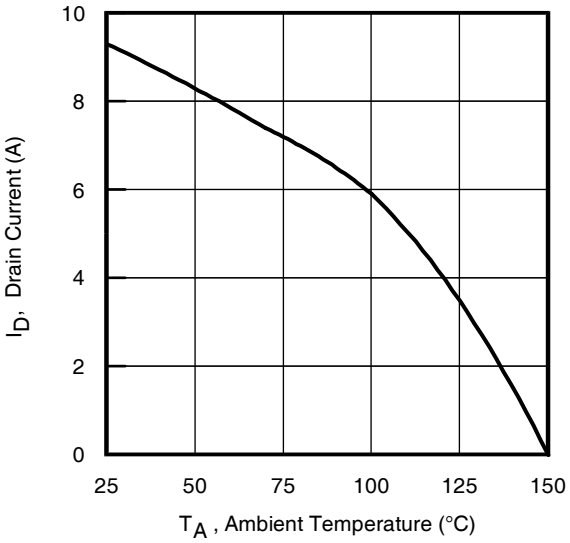

Fig 9. Maximum Drain Current vs. Ambient Temperature

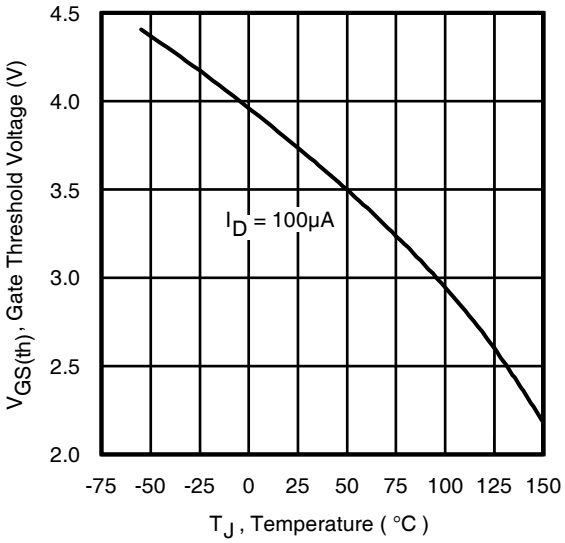

Fig 10. Threshold Voltage vs. Temperature

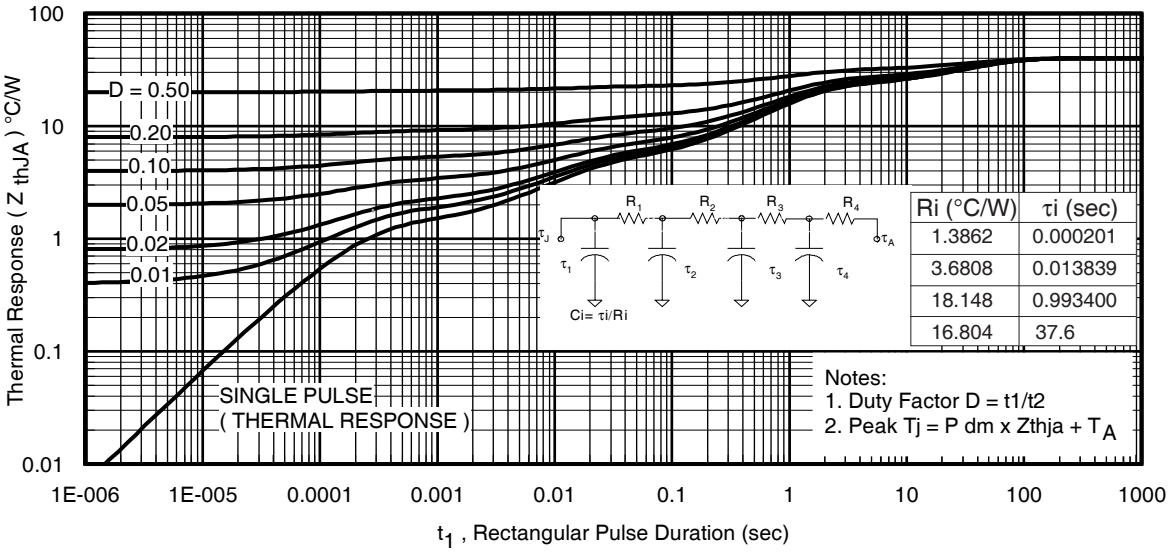

Fig 11. Maximum Effective Transient Thermal Impedance, Junction-to-Ambient

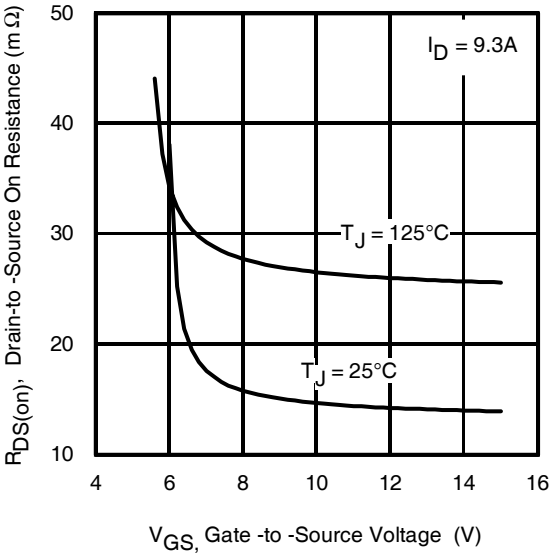

Fig 12. On-Resistance vs. Gate Voltage

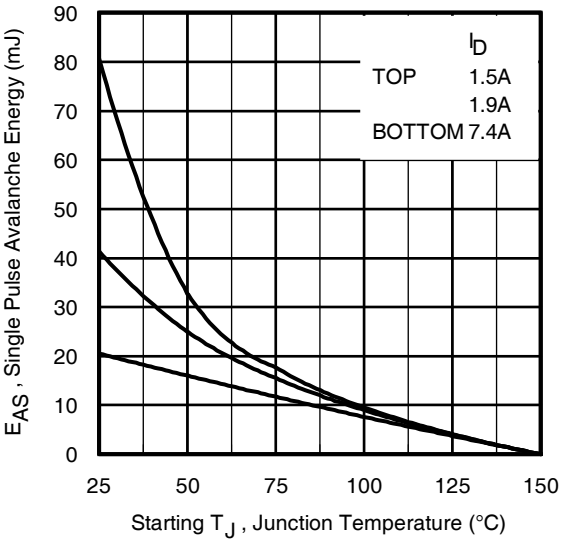

Fig 13. Maximum Avalanche Energy vs. Drain Current

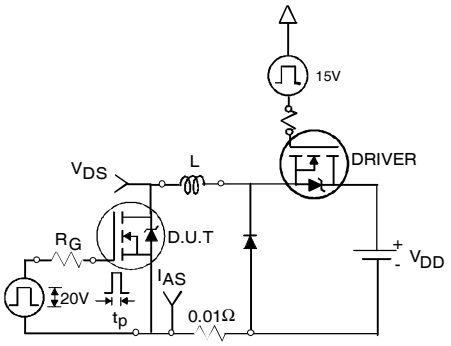

Fig 14a. Unclamped Inductive Test Circuit

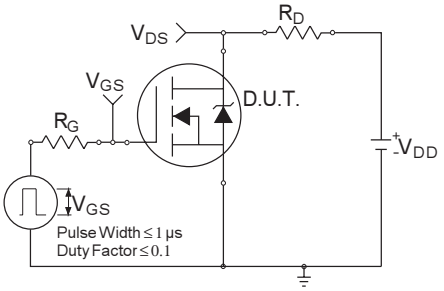

Fig 15a. Switching Time Test Circuit

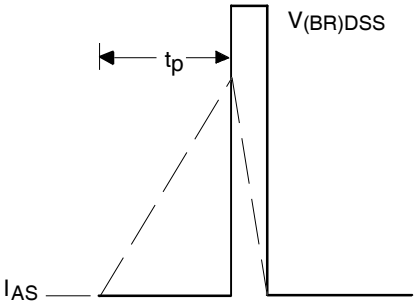

Fig 14b. Unclamped Inductive Waveforms

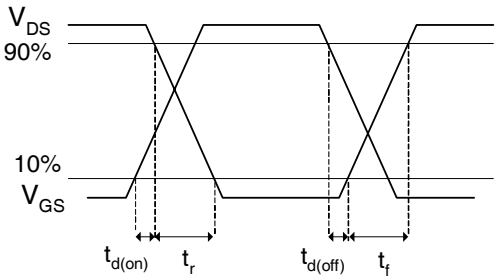

Fig 15b. Switching Time Waveforms

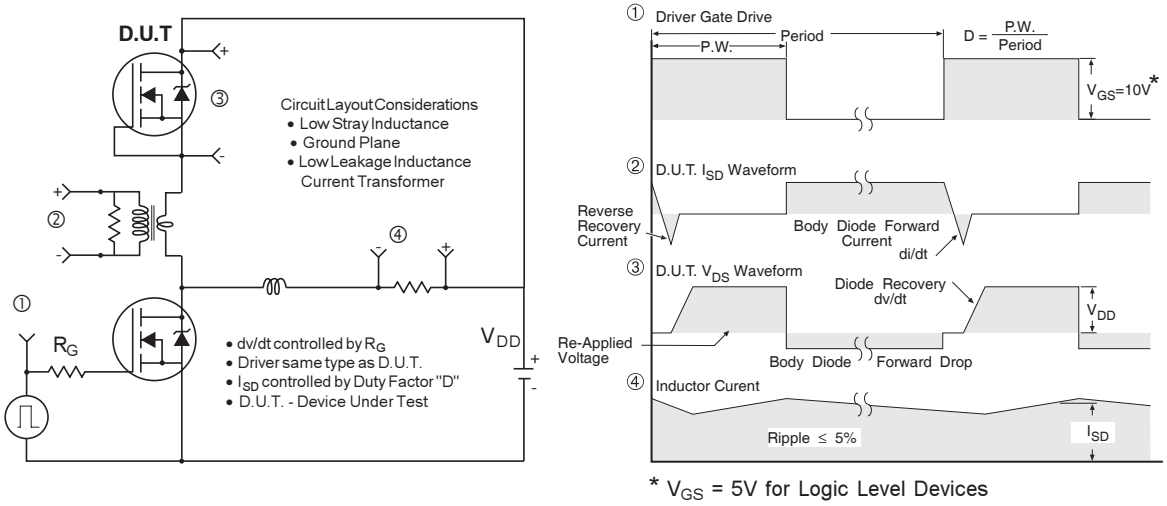

Fig 16. Peak Diode Recovery dv/dt Test Circuit for N-Channel HEXFET® Power MOSFETs

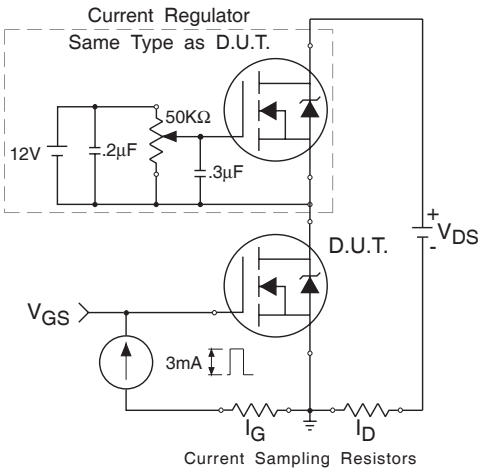

Fig 17. Gate Charge Test Circuit

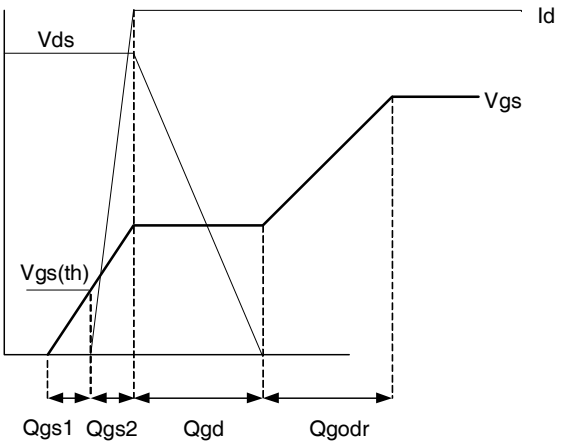

Fig 18. Gate Charge Waveform

International
IOR Rectifier

PQFN Package Details

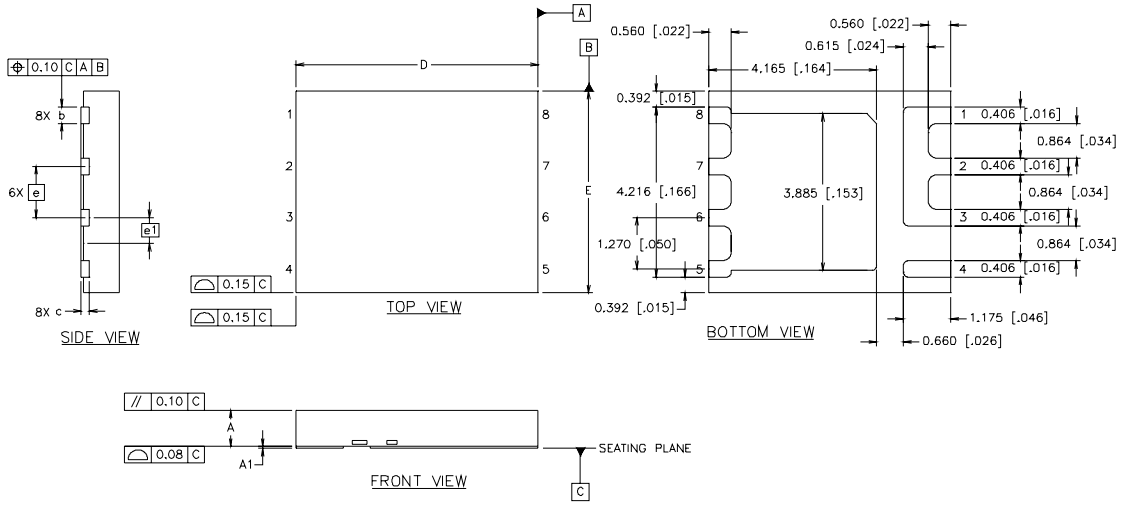

DIM	INCHES		MILLIMETERS	
	MIN	MAX	MIN	MAX
A	.0315	.0394	0.800	1.000
A1	.0000	.0020	0.000	0.050
b	.0140	.0180	0.356	0.456
c	.0080 REF.		0.203 REF.	
D	.2362 BASIC		6.0 BASIC	
E	.1969 BASIC		5.0 BASIC	
e	.0500 BASIC		1.270 BASIC	
e1	.0250 BASIC		0.635 BASIC	

PQFN Part Marking

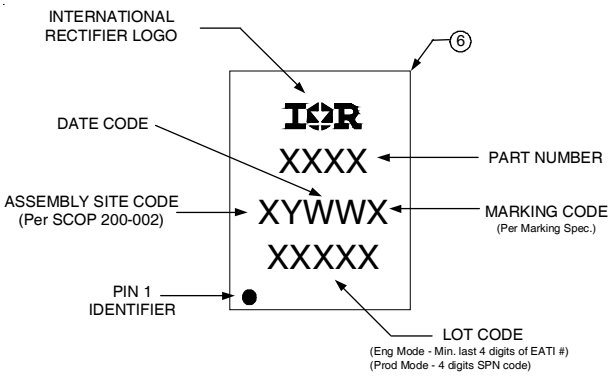

TOP MARKING (LASER)

Note: For the most current drawing please refer to IR website at http://www.irf.com/package/

PQFN Tape and Reel

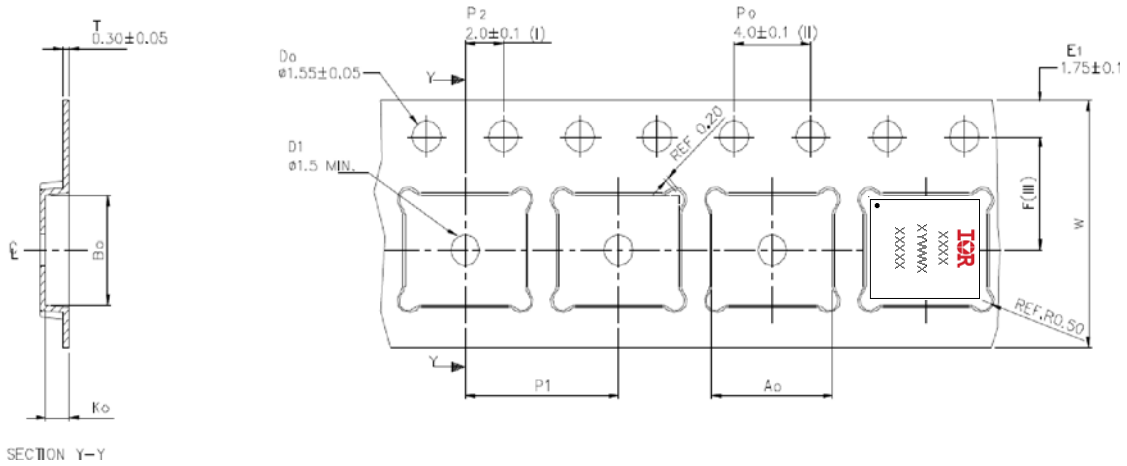

Ao	6.30 +/− 0.1
Bo	5.30 +/− 0.1
Ko	1.20 +/− 0.1
F	5.50 +/− 0.1
P1	8.00 +/− 0.1
W	12.00 +/− 0.3

(I) Measured from centreline of sprocket hole to centreline of pocket.
(II) Cumulative tolerance of 10 sprocket holes is ± 0.20 .
(III) Measured from centreline of sprocket hole to centreline of pocket.
(IV) Other material available.
(V) Typical SR of form tape Max 10^9 OHM/SQ

ALL DIMENSIONS IN MILLIMETRES UNLESS OTHERWISE STATED

Note: For the most current drawing please refer to IR website at http://www.irf.com/package/

Notes:

① Repetitive rating; pulse width limited by max. junction temperature.
② Starting $T_J = 25°C$, L = 0.75mH, $R_G = 25\Omega$, $I_{AS} = 7.4A$.
③ Pulse width ≤ 400µs; duty cycle ≤ 2%.
④ Rthjc is guaranteed by design
⑤ When mounted on 1 inch square 2 oz copper pad on 1.5x1.5 in. board of FR-4 material.

Data and specifications subject to change without notice.
This product has been designed and qualified for the Consumer market.
Qualification Standards can be found on IR's Web site.

International
IOR Rectifier

IR WORLD HEADQUARTERS: 233 Kansas St., El Segundo, California 90245, USA Tel: (310) 252-7105
TAC Fax: (310) 252-7903
Visit us at www.irf.com for sales contact information.12/08