Customer Information Sheet

DRAWING No.: M80-5S1XXXXME	SHEET 2 OF 2	IF IN DOUBT - ASK	©	NOT TO SCALE	THIRD ANGLE PROJECTION	ALL DIMENSIONS IN mm

SPECIFICATIONS:

MATERIAL:
MOULDING = GLASS-FILLED PPS, UL94V-0, BLACK
CONTACT = PHOSPHOR BRONZE
JACKSCREW = STAINLESS STEEL

FINISH (CONTACTS):
NICKEL ALL OVER CONTACTS
05 = 0.75µ GOLD ALL OVER
22 = 0.75µ GOLD ON CONTACT AREA, 3µ TIN/LEAD ON TAILS
42 = 0.75µ GOLD ON CONTACT AREA, 3µ 100% TIN ON TAILS

ELECTRICAL:
CURRENT RATING AT 25°C = 3.0A MAX
CURRENT RATING AT 85°C = 2.2A MAX
WORKING VOLTAGE = 800V AC/DC
VOLTAGE PROOF = 1200V AC/DC
CONTACT RESISTANCE = 25mΩ MAX
INSULATION RESISTANCE = 100MΩ MIN

MECHANICAL:
DURABILITY = 500 OPERATIONS

ENVIRONMENTAL:
TEMPERATURE RANGE = -55°C TO +121°C

PACKING:
TUBE

FOR COMPLETE SPECIFICATION, SEE COMPONENT SPECIFICATION C005XX (LATEST ISSUE)

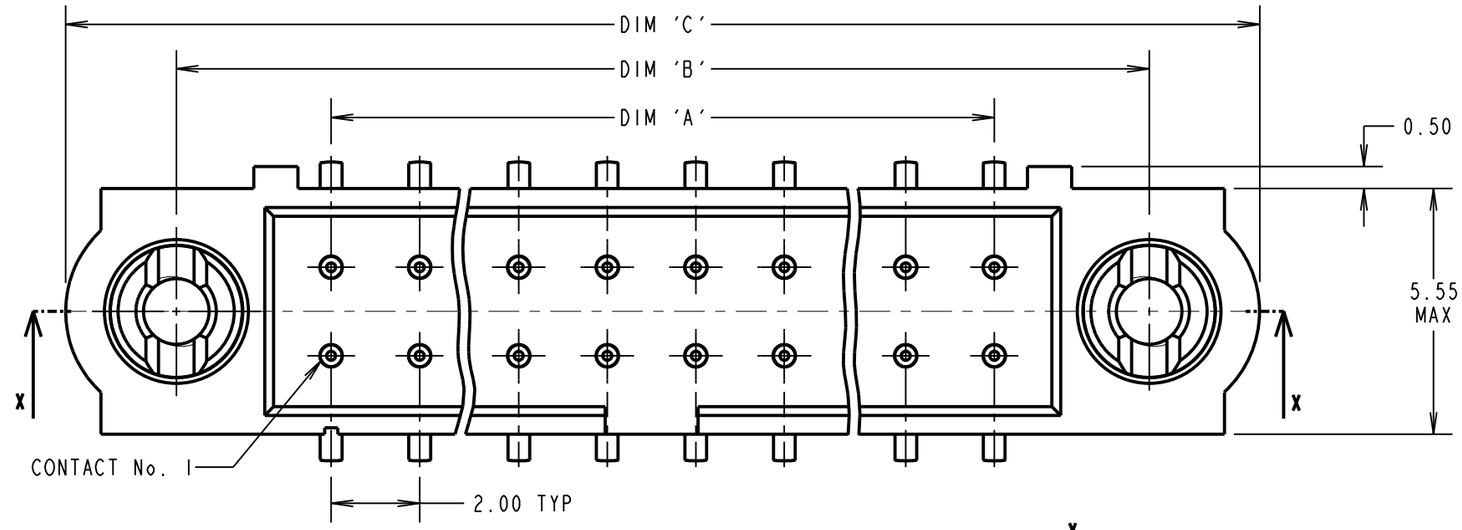

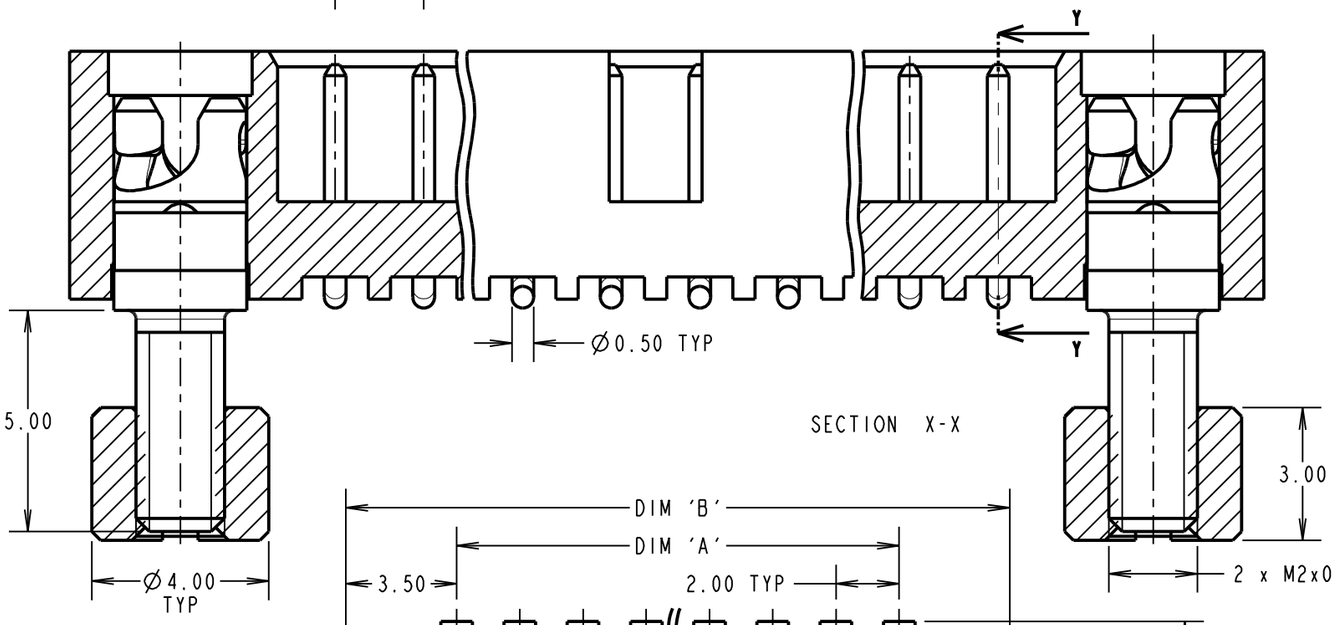

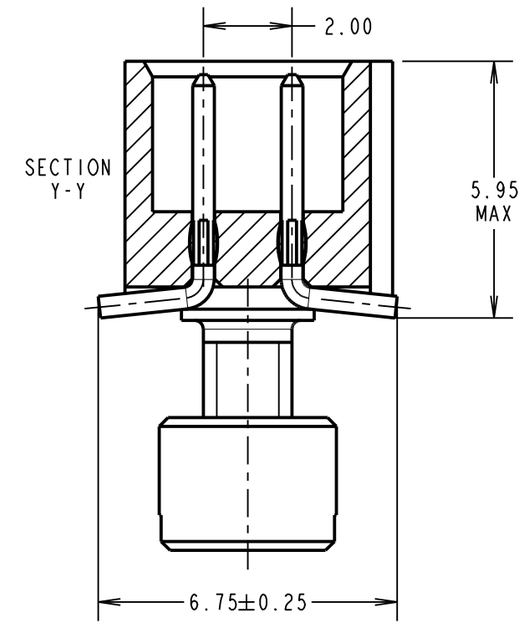

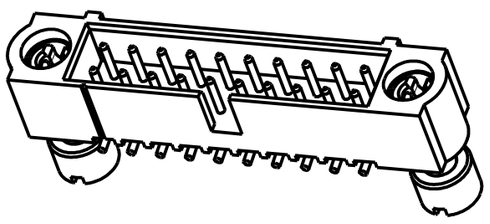

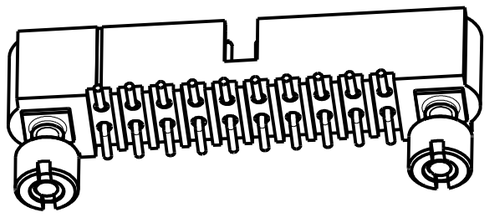

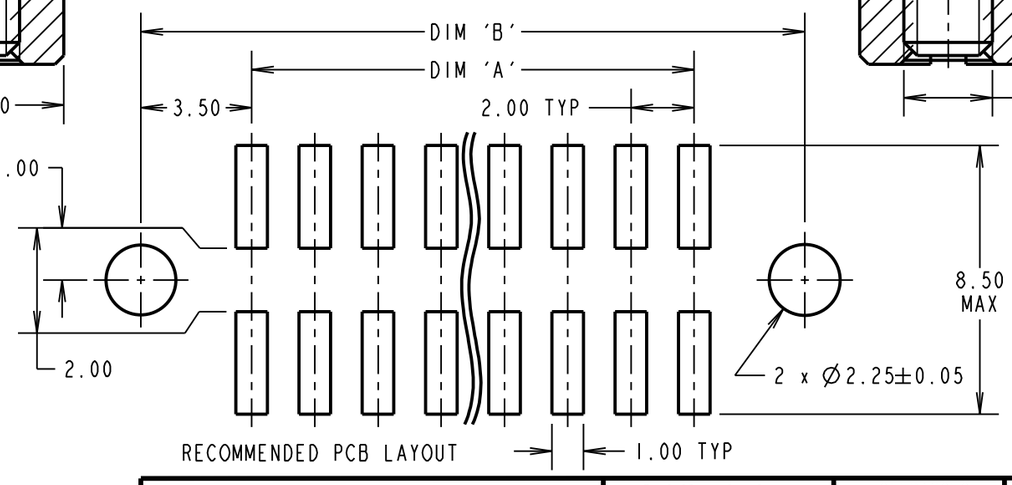

DIMENSION	CALCULATION
DIM 'A'	TOTAL No. OF CONTACTS - 2
DIM 'B'	TOTAL No. OF CONTACTS + 5
DIM 'C'	TOTAL No. OF CONTACTS + 10

EXAMPLE ORDER CODE 1: CONNECTOR WITH 20 CONTACTS, GOLD ON CONTACT AREA AND 100% TIN OVER NICKEL ON TAIL

M80-5S12042ME

DIM 'A' = 18.00mm, DIM 'B' = 25.00mm, DIM 'C' = 30.00mm

ORDER CODE:

M80-5S1XXXXME

TOTAL No. OF CONTACTS
04 TO 50
(EVEN NUMBERS ONLY)

FINISH CODE
05 - GOLD
22 - GOLD ON CONTACT AREA / TIN/LEAD ON TAIL
42 - GOLD ON CONTACT AREA / 100% TIN ON TAIL

NAME	ISS.	DATE	C/NOTE
MSP	3	12.08.15	13042
APPROVED:	M.PERREN		
CHECKED:	M.PLESTED		
DRAWN:	S. MCCULLAGH		
CUSTOMER REF.:			
ASSEMBLY DRG:			

HARWIN

www.harwin.com
technical@harwin.com

THIS DRAWING AND ANY INFORMATION OR DESCRIPTIVE MATTER SET OUT HEREON ARE CONFIDENTIAL AND COPYRIGHT PROPERTY OF THE HARWIN GROUP AND MUST NOT BE DISCLOSED, LOANED, COPIED OR USED FOR MANUFACTURING, TENDERING OR FOR ANY OTHER PURPOSE WITHOUT THEIR WRITTEN PERMISSION.

TOLERANCES
X. = ±1mm
X.X = ±0.50mm
X.XX = ±0.10mm
X.XXX = ±0.01mm
ANGLES = ±5°
UNLESS STATED

MATERIAL: SEE ABOVE
FINISH: SEE ABOVE
S/AREA: mm²

TITLE: DATAMATE J-TEK DIL VERT SMT MALE ASSY WITH 101LOK RETAINERS

DRAWING NUMBER: **M80-5S1XXXXME**

SHT 2 OF 2