Customer Information Sheet

DRAWING No.: M80-5L11442M5-01-333-01-333	SHEET 2 OF 2	IF IN DOUBT - ASK	©	NOT TO SCALE	THIRD ANGLE PROJECTION	ALL DIMENSIONS IN mm

SPECIFICATIONS:

MATERIAL:
- MOULDING: GLASS FILLED PPS, UL94V-0, BLACK
- SIGNAL CONTACT: PHOSPHOR BRONZE
- POWER CONTACT: COPPER ALLOY
- BOARD-MOUNT JACKSCREW, SCREW: STAINLESS STEEL

FINISH:
- SIGNAL CONTACT:
  - 0.75µ GOLD ON CONTACT AREA,
  - 3µ 100% TIN ON TAILS
- POWER CONTACT: GOLD

ELECTRICAL:
- WORKING VOLTAGE = 120V AC/DC
- VOLTAGE PROOF = 360V AC/DC
- INSULATION RESISTANCE = 100MΩ MIN
- SIGNAL CONTACT:
  - CURRENT RATING AT 25°C = 3.0A MAX
  - CURRENT RATING AT 85°C = 2.2A MAX
  - CONTACT RESISTANCE = 25 mΩ MAX
- POWER CONTACT:
  - CONTACT RESISTANCE 6 mΩ MAX
  - CURRENT RATING = 20A MAX

MECHANICAL:
- DURABILITY = 500 OPERATIONS
- SIGNAL CONTACT:
  - INSERTION FORCE = 2.8N MAX
  - WITHDRAWAL FORCE = 0.2N MIN
- POWER CONTACT:
  - INSERTION FORCE = 5N MAX
  - WITHDRAWAL FORCE = 0.5N MIN

ENVIRONMENTAL:
- TEMPERATURE RANGE = -55°C TO +125°C

PACKING:
- TUBE

FOR COMPLETE SPECIFICATION SEE COMPONENT SPECIFICATION C005XX (LATEST ISSUE)

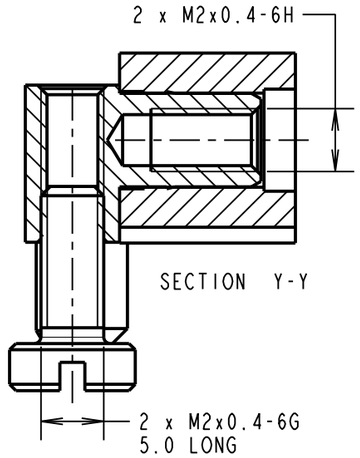

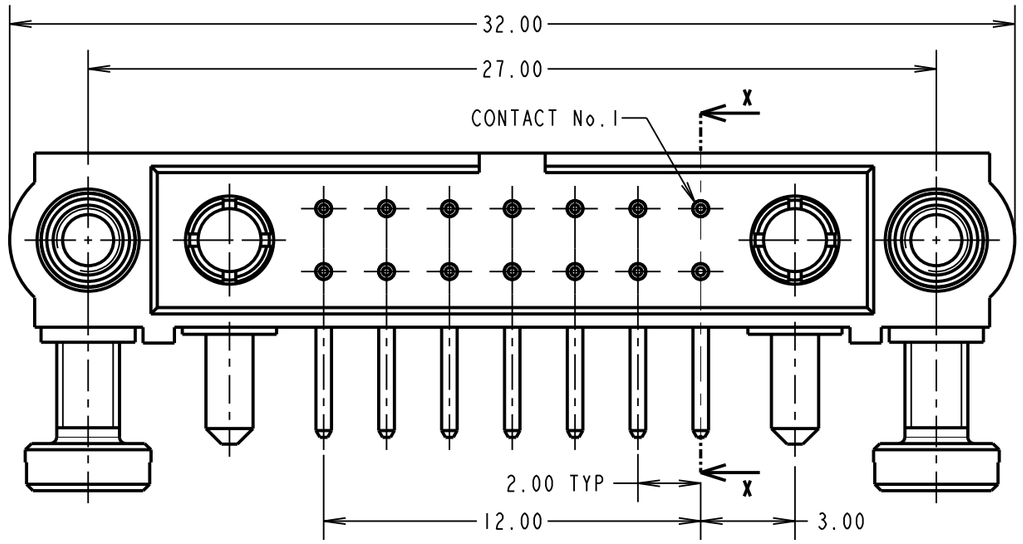

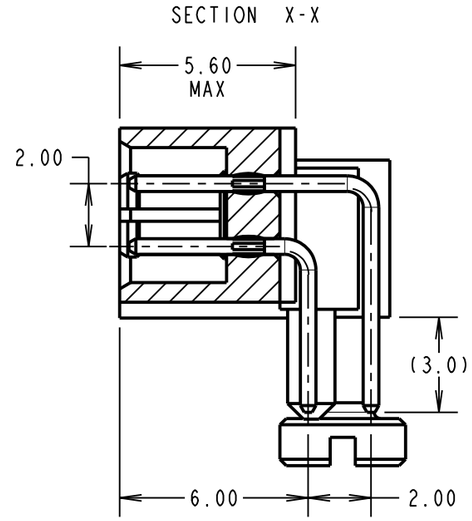

VIEW OF POWER CONTACT

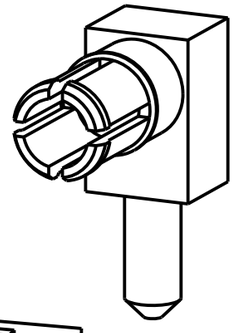

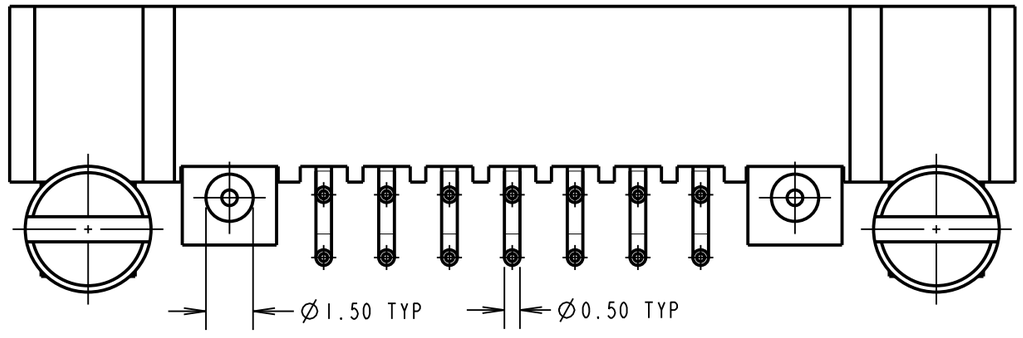

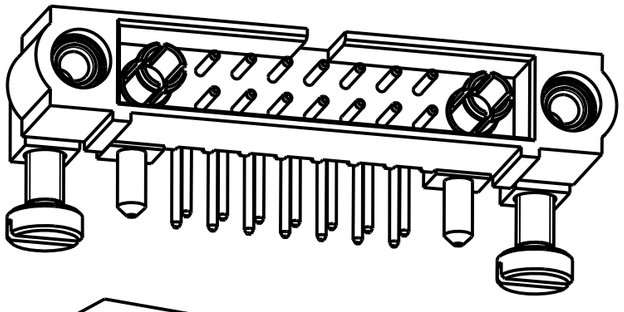

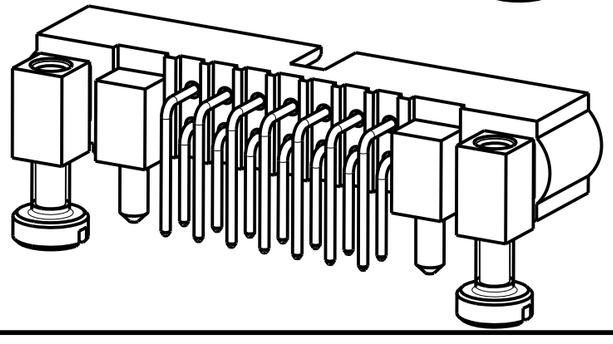

RECOMMENDED PCB LAYOUT

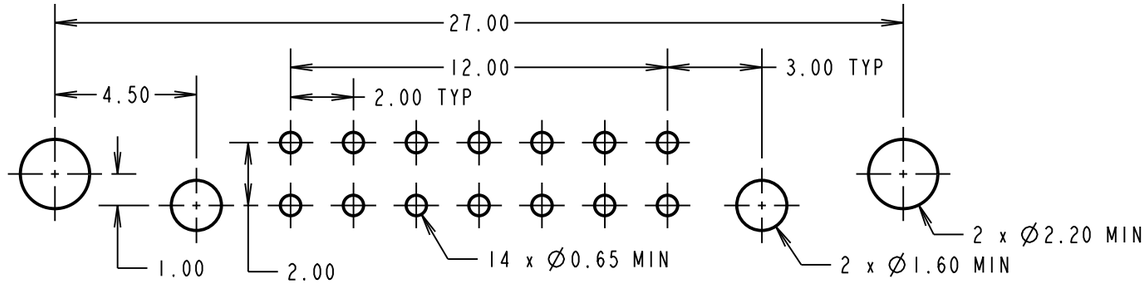

SM	1	18.04.11	10806
NAME	ISS.	DATE	C/NOTE

APPROVED: S. MCCULLAGH
CHECKED: M. G. PLESTED
DRAWN: R. ADDE
CUSTOMER REF.:
ASSEMBLY DRG:

HARWIN

HARWIN USA	HARWIN Europe (UK)	HARWIN Asia
TEL: 603 893 5376	TEL: 023 9231 4545	TEL: +65 6 779 4909
FAX: 603 893 5396	FAX: 023 9231 4590	FAX: +65 6 779 3868
mis@harwin.com	mis@harwin.co.uk	mis@harwin.com.sg

THIS DRAWING AND ANY INFORMATION OR DESCRIPTIVE MATTER SET OUT HEREON ARE CONFIDENTIAL AND COPYRIGHT PROPERTY OF THE HARWIN GROUP AND MUST NOT BE DISCLOSED, LOANED, COPIED OR USED FOR MANUFACTURING, TENDERING OR FOR ANY OTHER PURPOSE WITHOUT THEIR WRITTEN PERMISSION.

TOLERANCES
X. = ±1mm
X.X = ±0.25mm
X.XX = ±0.10mm
X.XXX = ±0.01mm
ANGLES = ±5°
UNLESS STATED

MATERIAL: SEE ABOVE
FINISH: SEE ABOVE
S/AREA: mm²

TITLE: JACKSCREW DATAMATE MIXED TECHNOLOGY PC TAIL MALE ASSEMBLY

DRAWING NUMBER: M80-5L11442M5-01-333-01-333

SHT 2 OF 2