PARA LIGHT ELECTRONICS CO., LTD.
4F, No.1, Lane 93, Chien Yi Road, Chung Ho City, Taipei, Taiwan
Tel: 886-2-2225-3733 Fax: 886-2-2225-4800
E-mail: para@para.com.tw http://www.para.com.tw

DATA SHEET

PART NO. : L-C170JFCT

REV : A / 3

CUSTOMER'S APPROVAL : _____ DCC : _____

PACKAGE OUTLINE DIMENSIONS

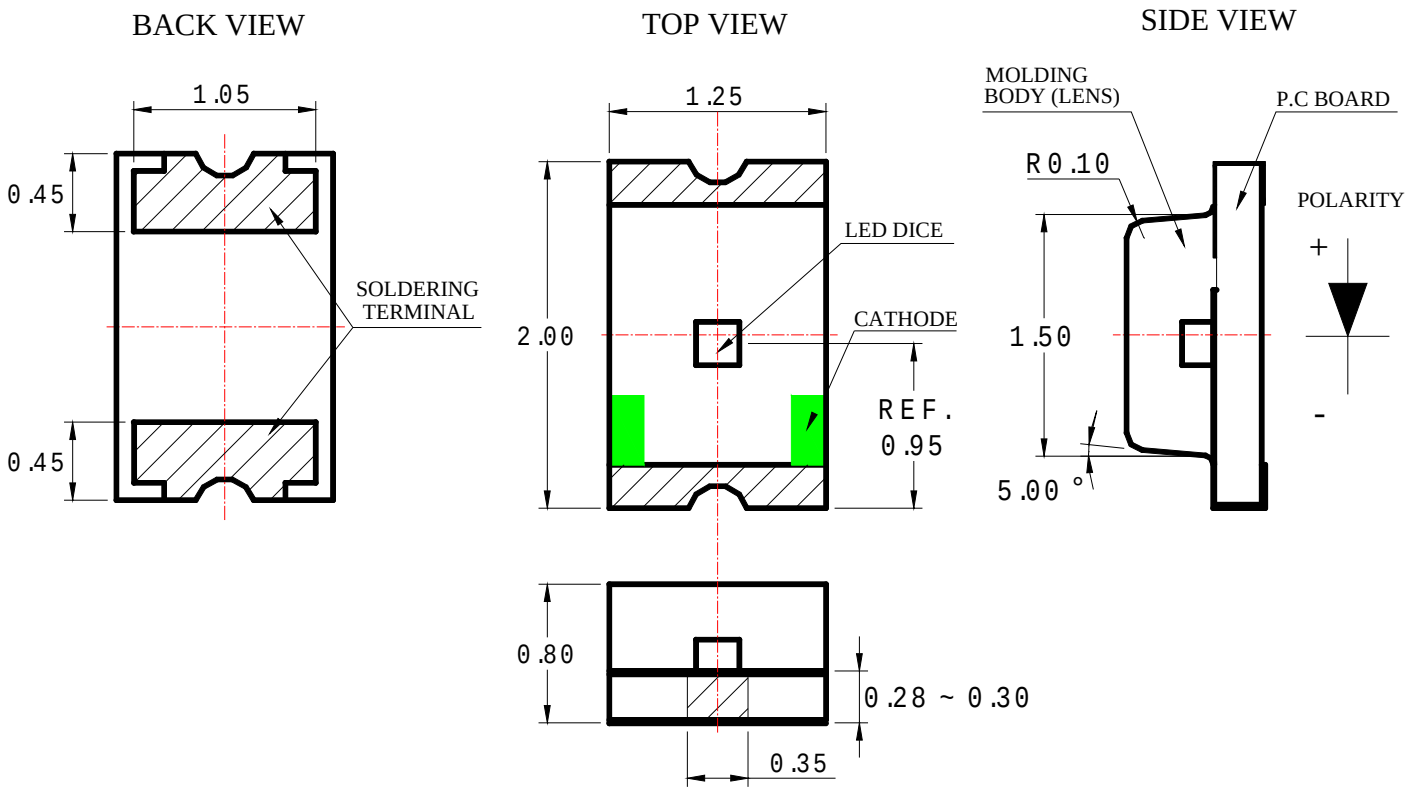

Notes:

1. All dimensions are in millimeters.
2. Tolerance is ± 0.1mm (.004") unless otherwise noted.

Features

- ∗ Top view, wide view angle, single color Chip LED.
- ∗ Package in 8mm tape on 7" diameter reels.
- ∗ Compatible with automatic Pick & Place equipment.
- ∗ Compatible with Infrared and Wave soldering reflow solder processes.
- ∗ EIA STD package.
- ∗ I.C. compatible.
- ∗ Pb free product.
- ∗ Meet RoHS Green Product.

Chip Materials

- ∗ Dice Material : AlInGaP
- ∗ Light Color : Amber
- ∗ Lens Color : Water Clear

Absolute Maximum Ratings(Ta=25℃)

Symbol	Parameter	Rating	Unit
P_D	Power Dissipation	75	mW
I_{PF}	Peak Forward Current (1/10 Duty Cycle, 0.1ms Pulse Width)	80	mA
I_F	Continuous Forward Current	25	mA
-	De-rating Linear From 25℃	0.25	mA/℃
V_R	Reverse Voltage	5	V
ESD	Electrostatic Discharge Threshold(HBM)[Note A]	2000	V
Topr	Operating Temperature Range	-40 ~ +85	℃
Tstg	Storage Temperature Range	-40 ~ +85	℃

Note A :

HBM : Human Body Model. Seller gives no other assurances regarding the ability of to withstand ESD.

Electro-Optical Characteristics(Ta=25℃)

Parameter	Symbol	Min.	Typ.	Max.	Unit	Test Condition
Luminous Intensity	IV	40	80		mcd	IF=20mA
Viewing Angle	$2\theta 1/2$		130		deg	Note 2
Peak Emission Wavelength	λp		611		nm	Measurement @Peak
Dominant Wavelength	λd		605		nm	IF=20mA
Spectral Line Half-Width	$\Delta\lambda$		17		nm	
Forward Voltage	VF		2.0	2.6	V	IF =20mA
Reverse Current	IR			10	μA	VR = 5V

Bin Code List

Luminous Intensity(IV), Unit:mcd@20mA		
Bin Code	Min	Max
P	45.0	71.0
Q	71.0	112.0
R	112.0	180.0

Tolerance of each bin are±15%

Notes:

1. Luminous intensity is measured with a light sensor and filter combination that proximities the CIE eye-response curve.
2. θ1/2 is the off-axis angle at which the luminous intensity is half the axial luminous intensity.
3. The dominant wavelength λd is derived from the CIE chromaticity diagram and represents the single wavelength which defines the color of the device.
4. Caution in ESD :
   Static Electricity and surge damages the LED. It is recommended use a wrist band or anti-electrostatic glove when handling the LED. All devices, equipment and machinery must be properly grounded.
5. Major standard testing equipment by “Instrument System” Model : CAS140B Compact Array Spectrometer and “KEITHLEY” Source Meter Model : 2400.

Typical Electro-Optical Characteristics Curves

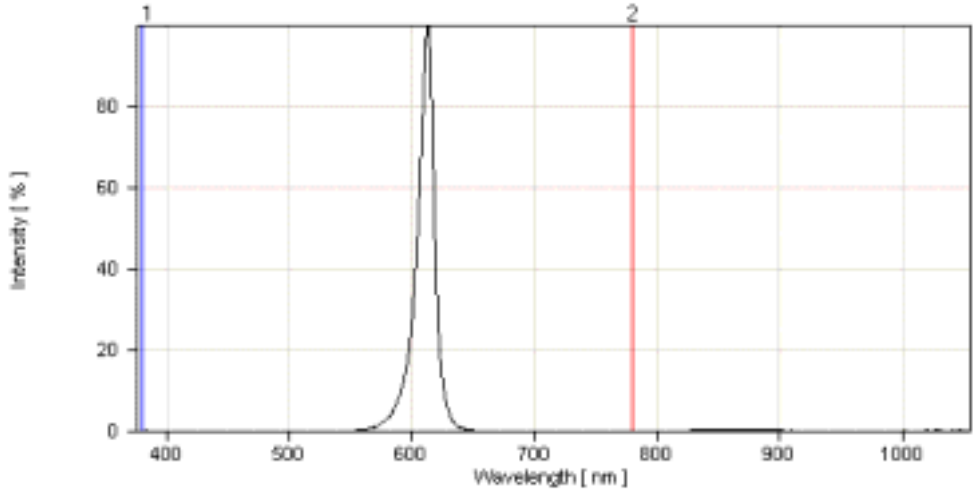

Fig.1 Relative Intensity vs. Wavelength

Typical Electro-Optical Characteristics Curves

(25℃ Ambient Temperature Unless Otherwise Noted)

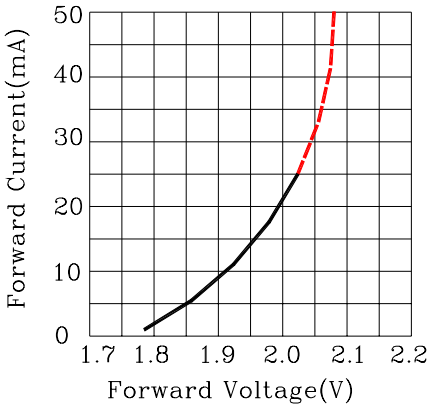

Fig.2 Forward Current vs.Forward Voltage

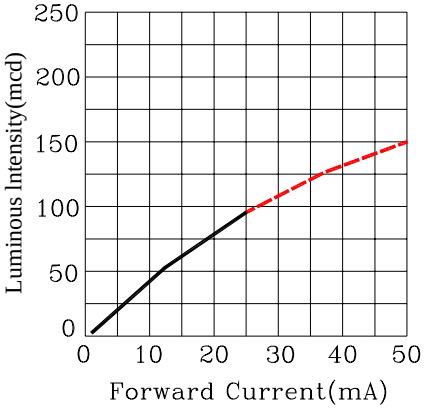

Fig.3 Luminous Intensity vs.Forward Current

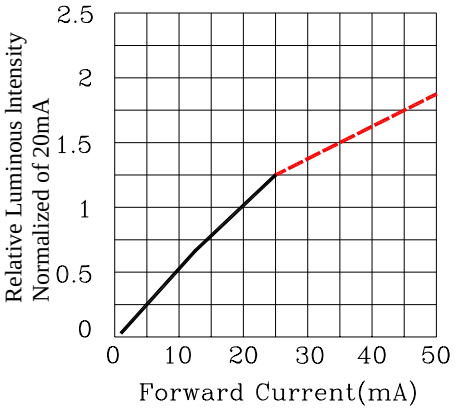

Fig.4 Relative Luminous Intensity vs.Forward Current

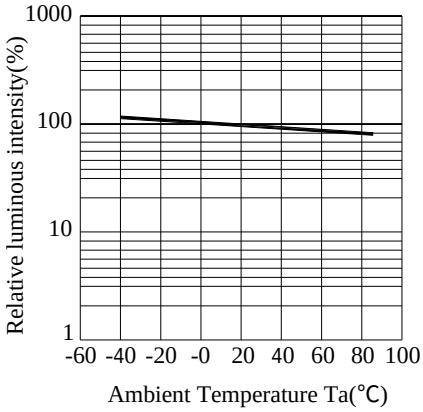

Fig.5 Luminous Intensity vs.Ambient Temperature

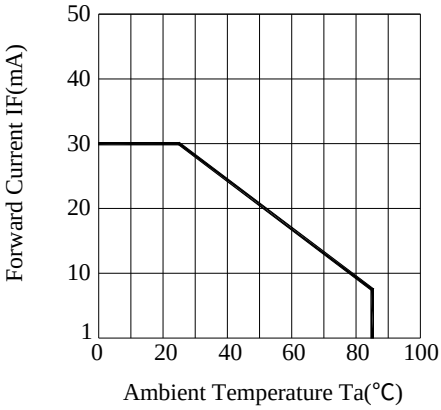

Fig.6 Forward Current Derating Curve

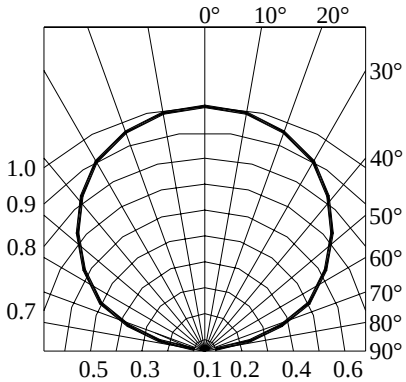

Fig.7 Relative Intensity vs.Angle

● Label Explanation

CUS. PART NO: To be denominated.

CUSTOMER: To be denominated.

PART NO: Refer to P14

IV --- Luminous Intensity Code

VF --- Forward Voltage Code

WD --- Dominant Wavelength Code

LOT NO: E L S 6 8 0001

A B C D E F

A---E: For series number

B---L: Local F: Foreign

C---S:SMD

D---Year

E---Month

F---SPEC.

PACKING QUANTITY OF BAG :

3000pcs max for 150、170、110、115 series

4000pcs max for 191 series

5000pcs max for 192 series

DATE CODE：2006 06 08

G H I

G--- Year

H--- Month

I --- Day

- Reel Dimensions

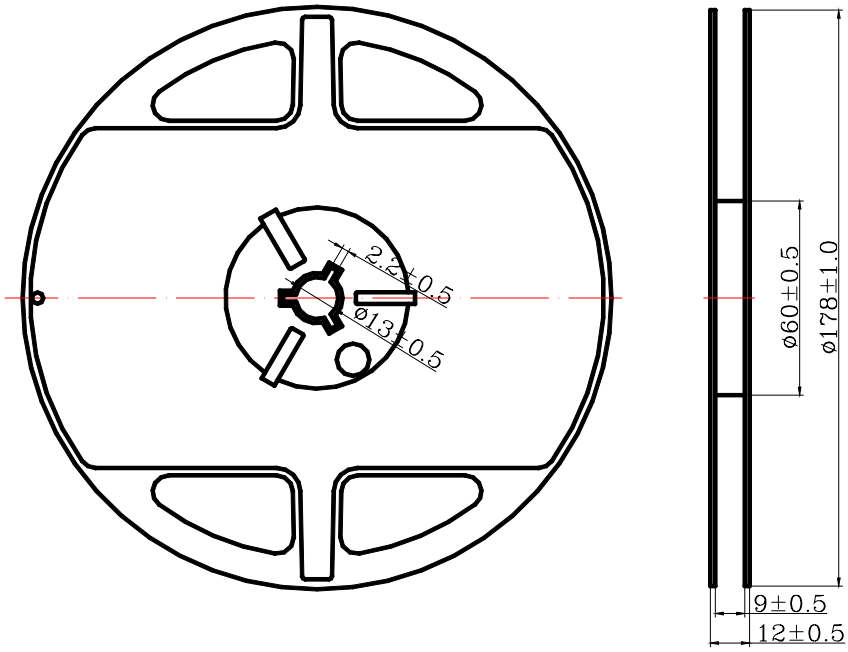

Notes:

1. Taping Quantity : 3000pcs max
2. The tolerances unless mentioned is±0.1mm, Angle±0.5 ° , Unit : mm.

- Package Dimensions Of Tape And Reel

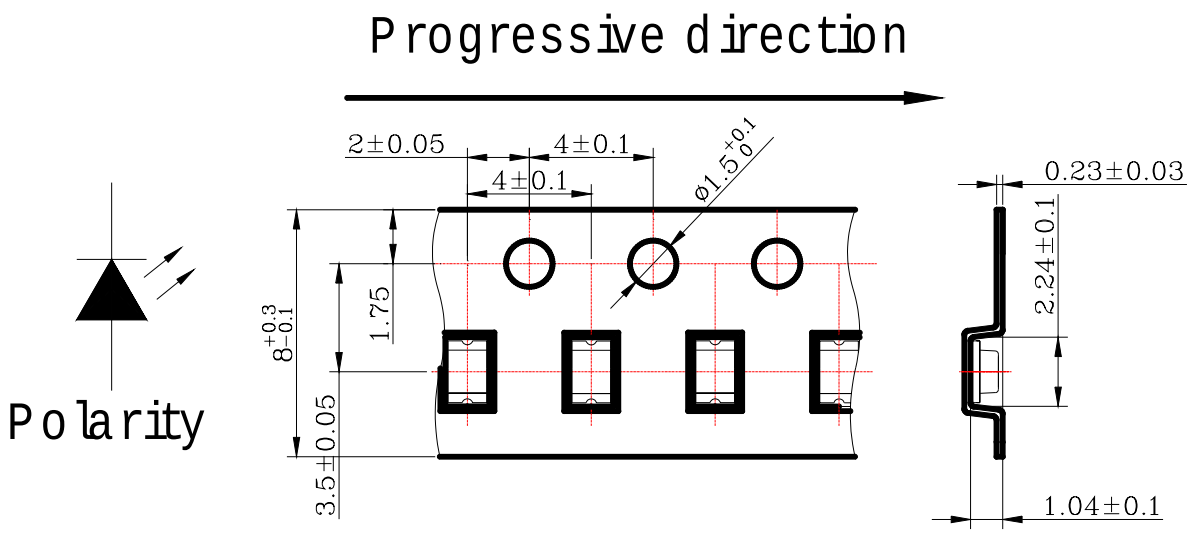

Notes:All dimensions are in millimeters.

Moisture Resistant Packaging

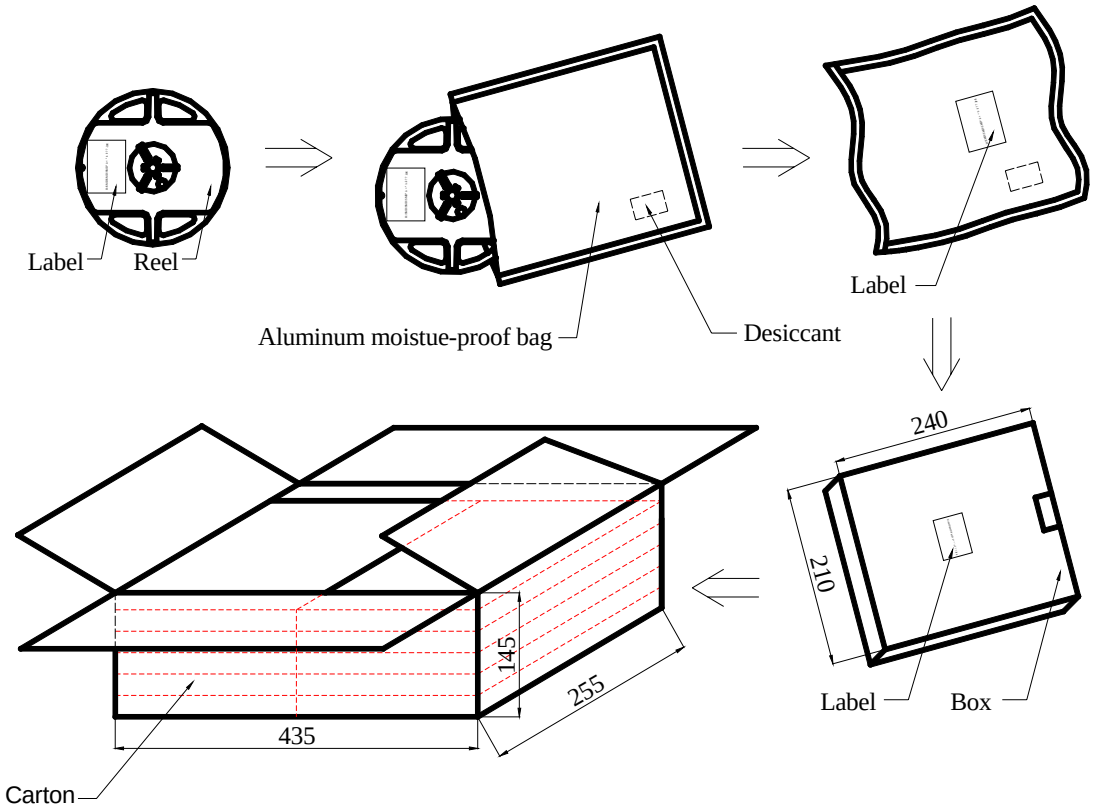

Notes : One reel in a bag, one bag in a inner box, ten inner boxes in a carton. Unit : mm.

- Cleaning

  ∗ If cleaning is required , use the following solutions for less than 1 minute and less than 40℃.

  ∗ Appropriate chemicals: Ethyl alcohol and isopropyl alcohol.

  ∗ Effect of ultrasonic cleaning on the LED resin body differs depending on such factors as the oscillator output, size of PCB and LED mounting method. The use of ultrasonic cleaning should be enforced at proper output after confirming there is no problem.

- Suggest Soldering Pad Dimensions

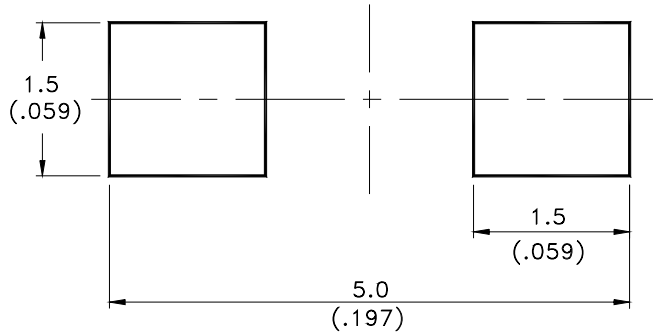

Direction of PWB camber and go to reflow furnace

● Suggest Sn/Pb IR Reflow Soldering Profile Condition:

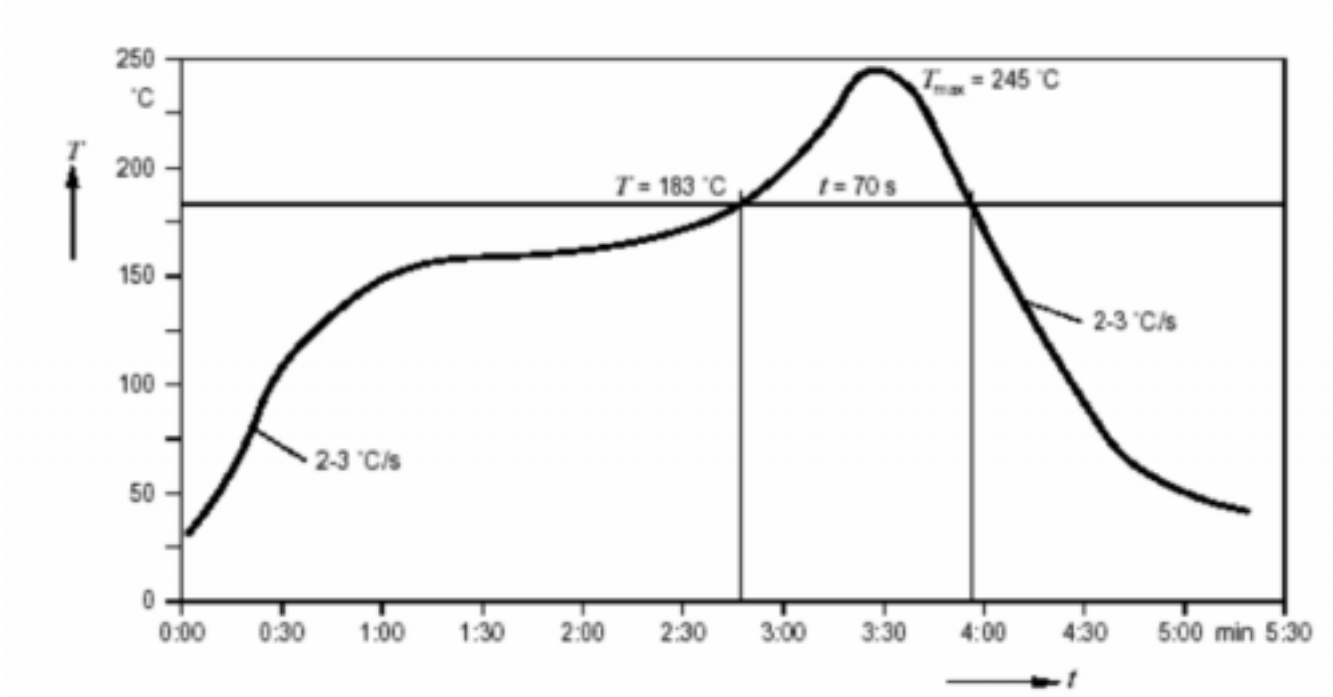

● Suggest Pb-Free IR Reflow Soldering Profile Condition:

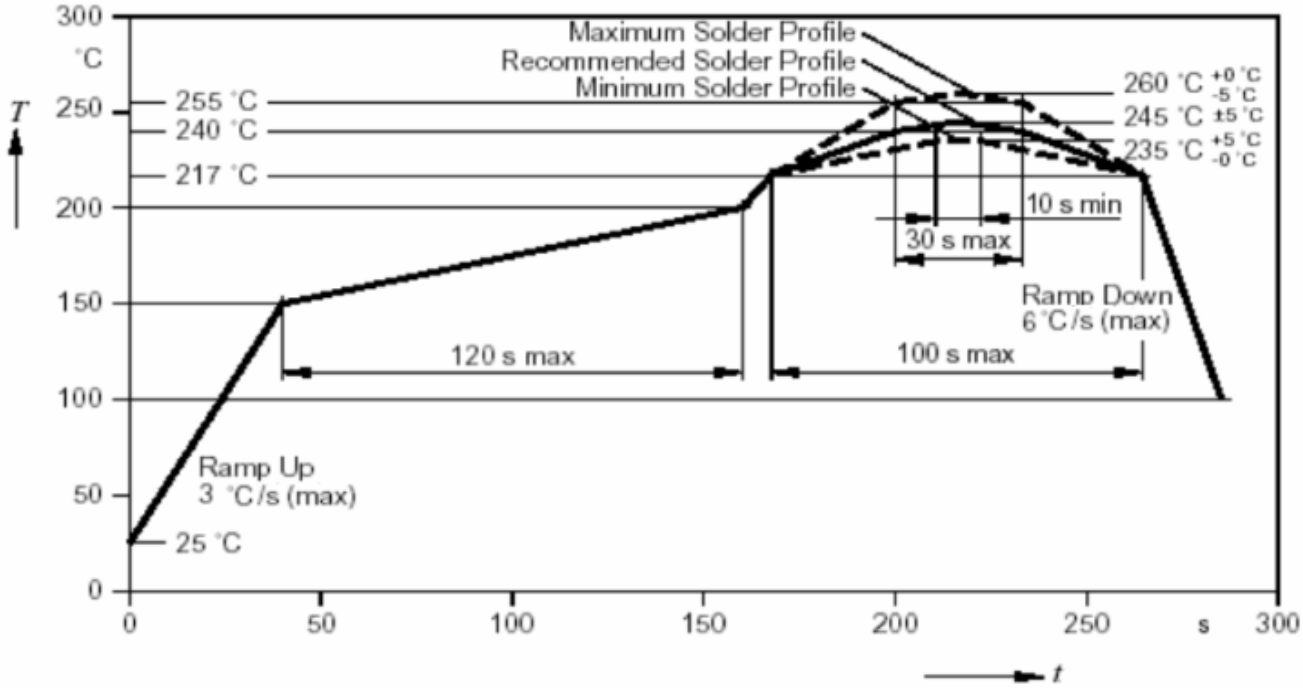

● CAUTIONS

1.Application limitation :

The LED's described here are intended to be used for ordinary electronic equipment (such as office equipment, communication equipment and household application).Consult PARA's sales in advance for information on application in which exceptional quality and reliability are required, particularly when the failure or malfunction of the LED's may directly jeopardize life or health (such as airplanes, automobiles, traffic control equipment, life support system and safety devices).

2.Storage :

Before opening the package :

The LEDs should be store kept at 5°C to 30°C or less and 85%RH or less.

After opening the package :

The LEDs should be kept at 5°C to 30°C or less and 70%RH or less. The LEDs should be soldered within 168 hours(7 days) after opening the package.

Please avoid rapid transitions in ambient temperature in high humidity environments where condensation may occur.

LEDs stored out of their original packaging for more than a week should be baked at 30°C for at 24 hours before solder assembly.

3.Soldering

Do not apply any stress to the lead frame during soldering while the LED is at high temperature.

Recommended soldering condition.

Reflow Soldering :

Pre-heat 120~150°C, 120sec. MAX., Peak temperature : 240°C Max. Soldering time : 10 sec Max.

Soldering Iron : (Not recommended)

Temperature 300°C Max., Soldering time : 3 sec. Max.(one time only), power dissipation of iron : 20W Max. use SN60 solder of solder with silver content and don't to touch LED lens when soldering.

Wave soldering :

Pre-heat 100°C Max, Pre-heat time 60 sec. Max, Solder wave 260°C Max, Soldering time 5 sec. Max. preformed consecutively cooling process is required between 1st and 2nd soldering processes.

4. Lead-Free Soldering

For Reflow Soldering :

1、Pre-Heat Temp:150-180℃,120sec.Max.

2、Soldering Temp:Temperature Of Soldering Pot Over 230℃,40sec.Max.

3、Peak Temperature:260℃, 5sec.

4、Reflow Repetition:2 Times Max.

5、Suggest Solder Paste Formula 93.3 Sn/3.1 Ag/3.1 Bi /0.5 Cu

For Soldering Iron (Not Recommended) :

1、Iron Tip Temp:350℃ Max.

2、Soldering Iron:30w Max.

3、Soldering Time:3 Sec. Max. One Time.

For Dip Soldering :

1、Pre-Heat Temp:150℃ Max. 120 Sec. Max.

2、Bath Temp:265℃ Max.

3、Dip Time:5 Sec. Max.

5. Drive Method

Circuit model A

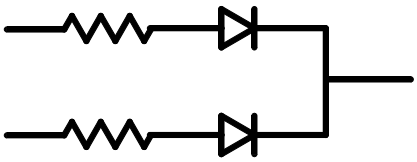

Circuit model B

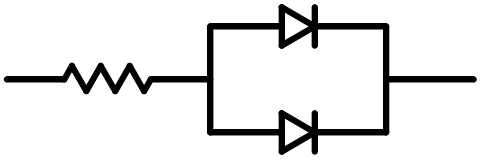

(A)Recommended circuit.

(B)The difference of brightness between LED`s could be found due to the Vf-If characteristics of LED.

6.Reliability Test

Classification	Test Item	Test Condition	Reference Standard
Endurance Test	Operation Life	Ta= Under Room Temperature As Per Data Sheet Maximum Rating *Test Time= 1000HRS (-24HRS,+72HRS)*@20mA.	MIL-STD-750D:1026 (1995) MIL-STD-883D:1005 (1991) JIS C 7021:B-1 (1982)
	High Temperature High Humidity Storage	IR-Reflow In-Board, 2 Times Ta= 65±5℃,RH= 90～95% *Test Time= 1000HRS±2HRS	MIL-STD-202F:103B(1980) JIS C 7021:B-11(1982)
	High Temperature Storage	Ta= 105±5℃ Test Time= 1000HRS (-24HRS,72HRS)	MIL-STD-883D:1008 (1991) JIS C 7021:B-10 (1982)
	Low Temperature Storage	Ta= -55±5℃ *Test Time=1000HRS (-24HRS,72H RS)	JIS C 7021:B-12 (1982)
Environmental Test	Temperature Cycling	105±5℃ -55±5℃ 10mins 10mins 100 Cycles	MIL-STD-202F:107D (1980) MIL-STD-750D:1051(1995) MIL-STD-883D:1010 (1991) JIS C 7021:A-4(1982)
	Thermal Shock	IR-Reflow In-Board, 2 Times 105±5℃ -55℃±5℃ 10mins 10mins 100 Cycles	MIL-STD-202F:107D(1980) MIL-STD-750D:1051(1995) MIL-STD-883D:1011 (1991)
	Solder Resistance	Tsol= 260 ± 5℃ Dwell Time= 10 ± 1sec	MIL-STD-202F:210A(1980) MIL-STD-750D:2031(1995) JIS C 7021:A-1(1982)
	Solder ability	Tsol= 235 ± 5℃ Immersion time 2±0.5 sec Immersion rate 25±2.5 mm/sec Coverage ≧95% of the dipped surface	MIL-STD-202F:208D(1980) MIL-STD-750D:2026(1995) MIL-STD-883D:2003(1991) IEC 68 Part 2-20 JIS C 7021:A-2(1982)

7.Others:

The appearance and specifications of the product may be modified for improvement without notice.

- PART NO. SYSTEM :

L – C 1 5 0 X C X X - X X X X

XXXX : Special specification for customer

T : Taping for 7 inch reel
TC : Taping for 13 inch reel
TH : IV half binning
TP : Wavelength binning

Lens color
C : Water Clear
W : White Diffused
T : Color Transparent
D : Color Diffused

G : Gap 570nm Green
Y : GaAsp 585 nm Yellow
E : GaAsp 620 nm Orange
SR : GaAlAs 634 nm Red
KG : AlInGap 570nm Super Green
KY : AlInGap 590nm Super Yellow
KF(JF) : AlInGap 605nm Super Amber
KR : AlInGap 630 nm Super Red
LB : InGaN 470nm Blue
LG: InGaN 525nm Green……

0 : Single chip
1/2 : Super thin single chip
5/6 : Dual chip
F : Three chip(Full color)

150 : 1206 1.1T Type
170 : 0805 0.8T Type
191 : 0603 0.6T Type
192 : 0603 0.4T Type
110 : 1206 1.0T Type

C : Top View Type
S : Side View Type