Threaded Probe 50 mil

F730

Centers (mm/mil)	1,27 / 50
Current	3,0 A
Temperature	-20°C...+80°C
R typically	50 mOhm

Spring Force (cN ±20%)

Preload	Nominal Force
20	110

Travel (mm)

Nominal	Maximum
4,0	5,0
Thread (M)	0,9x0,175
Wrench Size	1,0
Pointing Accuracy	±0,08 mm

Materials and Plating

Plunger	see Tip Style
Barrel	Bronze, gold plated
Spring	Music wire, gold plated
Receptable	Brass, Gold plated

Accessories

Screw-in tool probe	FWZ730 (T) max. Ø0,9 mm
Screw-in tool probe	FWZ730S1 (T1) max. Ø1,5 mm

Drill Size [mm]

H730...	0,99 - 1,00

Projection Height

H730...	10,5

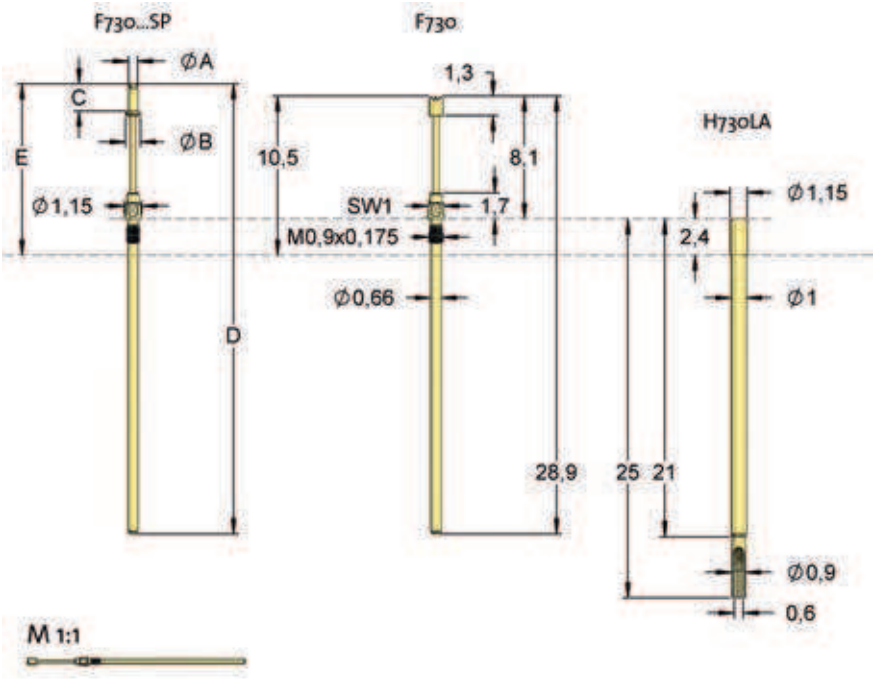

Type			Tip-Ø		Spring Force
F 730	12	B	064	G	110
	Tip Style	Material		Finish	Special Version

Material:	B = BeCu
Tip-Ø:	064 = 0,64 mm (e.g.)
Finish:	G = Gold
Receptacle:	Order Code according drawing

ORDER EXAMPLE

Tip Style	Number	Material	Plating	Ø in mm	Version
	06	B	G	0,9	-
	12	B	G	0,64	-
	17	B	G	0,64	-
	18	B	G	0,4	-

Specifications subject to change without notice