schmelzer transformers

type MRKO

15 ... 3000 VA

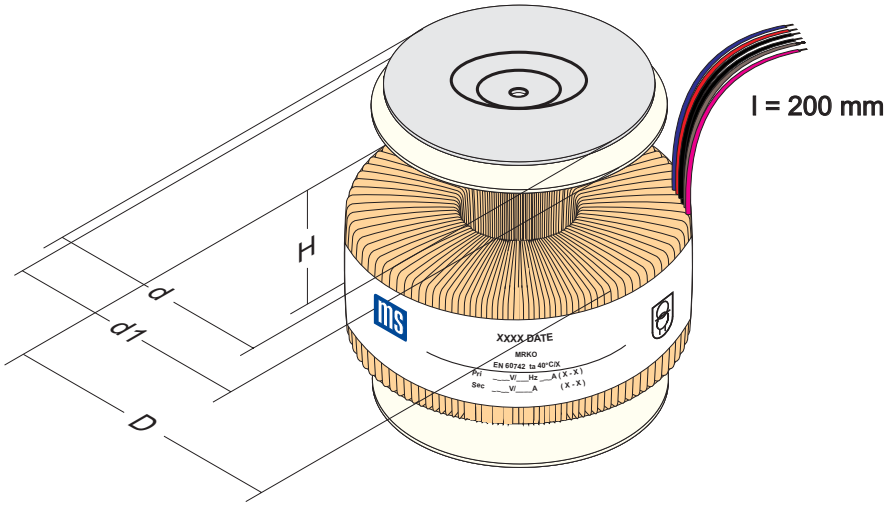

MRKO	power [VA] ta 40°C/B	D ± 1 mm [mm]	H ± 1 mm [mm]	metal disk d [mm]	rubber disk d1 [mm]	voltage faktor ca.	mounting set H + 1 [mm]
	15 VA	59	29	45	50	1,20	+ 3,0
	30 VA	75	34	50	60	1,16	+ 3,0
	50 VA	80	40	50	60	1,15	+ 5,0
	80 VA	90	40	60	70	1,12	+ 5,0
	120 VA	97	48	70	80	1,10	+ 5,0
	150 VA	112	48	70	80	1,09	+ 5,0
	200 VA	118	52	90	100	1,08	+ 5,0
	250 VA	118	60	90	100	1,07	+ 5,0
	300 VA	120	63	90	100	1,06	+ 5,0
	400 VA	133	62	90	100	1,06	+ 5,0
	500 VA	135	80	110	120	1,05	+ 5,5
	600 VA	155	72	110	120	1,05	+ 5,5
	800 VA	162	82	110	120	1,04	+ 5,5
	1000 VA	170	88	110	120	1,04	+ 5,5
	1200 VA	183	96	125	150	1,03	+ 6,0
	1600 VA	200	105	125	150	1,03	+ 6,0
	2000 VA	235	100	125	150	1,03	+ 6,0
	2500 VA	245	110	125	150	1,02	+ 6,0
	3000 VA	280	110	150	170	1,02	+ 6,0

- delivery with 1 metal disk and 2 rubber disk
- safety transformer satisfying EN 60742 (EN 61558-2-6) or insulating transformer satisfying EN 61558-2-4
- pirmary voltage alternative (115 V / 230 V / 400 V)
- secondary voltage on customers demand
- primary outputs with free wires, approx. 8 mm tinned
- secondary outputs with magnet wire and sleeving or litz wire, about 10 mm tinned
- all leads about 200 mm long, all outputs on the same place
- test voltage 2,5 kV or 4 kV pri - sec
- construction with UL-apporved material

technical changes reserved
Manfred Schmelzer GmbH
Waidplatzstrasse 6-8 · D-79331 Teningen-Nimburg
phone: +49 76 63 / 94 47 -0 · fax: +49 76 63 / 94 47 -50
info@ms-transformers.de
www.ms-transformers.de