| #5589 | Discharge Capacitors | PPMF 300-66.0 r K |
|---|---|---|

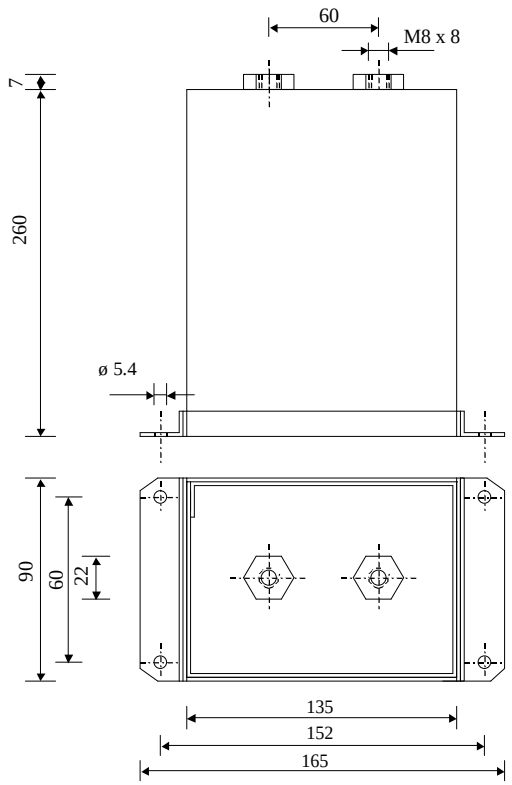


Dielectric of metallized polypropylene

Threaded outputs

Resin end sealing

Aluminium case thick 1.2 mm

| Parameter | Symbol | | Value | Unit | Condition |
|---|---|---|---|---|---|
| Capacitance | C | | 66 | µF | 1 V / 1 kHz |
| Tolerance | | | ± 10 | % | |
| Rated voltage | Un DC | | 3'000 | VDC | |
| Maximum voltage | Us max. | | 4'000 | V | non. rep. |
| Rated voltage | Un AC | | 630 | Veff | 50 Hz |
| RMS Current | Ieff max | | 80 | Aeff | 1 kHz … 100 kHz |
| slope of voltage variation | du/dt max. | | 37.9 | V/µsec | max. repetitive |
| Repetitive surge current | I cr. max | | 2500 | A | |
| Tangente delta | tgδ | | 9 | $10^{-4}$ | 1 V / 1 kHz |
| Equivalent serie resistance | ESR | | ≤ 2 | mΩ | 10 kHz |
| Stray inductance | ESL | | ≤ 200 | nH | |
| Insulation resistance | Ri x C | | > 20'000 | s | 500 VDC - 1 min |
| Test voltage between terminals | U T1 | | 4'500 | VDC | 10 s |
| Test voltage between terminals to case | U T2 | | 3'500 | VAC | 50 Hz - 1 min |
| Operating temp. | | | - 25 / + 70 °C | | |
| Estimated operational life (-3%) | | | > 5 x $10^6$ | Pulses | 3000 V / 2500 A max 10 Hz |
| | | | | | |
| **Dimension** | **Symbol** | | | **Unit** | **Conditions** |
| Width | B | | 90 | mm | |
| Length | L | | 260 | mm | |
| Height | H | | 135 | mm | |
| Thread | | | M8 x 8 | mm | |
| Thread spacing | | | 60 | mm | |
| | | | | | |
| | M1 | | | | |
| | M0 | | | | |
| | Modification | Date | Visa émetteur | | |


Condensateurs CH 1401 Yverdon-les-Bains
Kondensatoren Tel.: ++41 24 445 66 88
Capacitors Fax: ++41 24 445 66 89


Le Lanché Capacitors
A FISCHER & TAUSCHE COMPANY

HJJ | 09.08.2006 | faisab5589.XLS